INCH-POUND

MIL-M-38510/349B
12 May 2004
SUPERSEDING
MIL-M-38510/349A
1 October 1986

MILITARY SPECIFICATION

MICROCIRCUITS, DIGITAL, BIPOLAR ADVANCED SCHOTTKY TTL, PARITY CHECKER, MONOLITHIC SILICON

Reactivated after 12 May 2004 and may be used for either new or existing design acquisition.

This specification is approved for use by all Departments and Agencies of the Department of Defense.

The requirements for acquiring the product herein shall consist of this specification sheet and MIL-PRF 38535

1. SCOPE

1.1 Scope. This specification covers the detail requirements for monolithic silicon, Advanced Schottky TTL, parity checker microcircuits. Two product assurance classes and a choice of case outlines and lead finishes are provided for each type and are reflected in the complete part number. For this product, the requirements of MIL-M-38510 have been superseded by MIL-PRF-38535, (see 6.3).

1.2 Part or Identifying Number (PIN). The PIN is in accordance with MIL-PRF-38535, and as specified herein.

1.2.1 Device types. The device types are as follows:

Device type	Circuit
01	9-bit odd/even parity generator/checker

1.2.2 Device class. The device class is the product assurance level as defined in MIL-PRF-38535.

1.2.3 Case outlines. The case outlines are as designated in MIL-STD-1835 and as follows:

Outline letter	Descriptive designator	Terminals	Package style
A	GDFP5-F14 or CDFP6-F14	14	Flat pack
B	GDFP4-14	14	Flat pack
C	GDIP1-T14 or CDIP2-T14	14	Dual-in-line
D	GDFP1-F14 or CDFP2-F14	14	Flat pack
X	CQCC2-N20	20	Square leadless chip carrier
2	CQCC1-N20	20	Square leadless chip carrier

Comments, suggestions, or questions on this document should be addressed to: Commander, Defense Supply Center Columbus, ATTN: DSCC-VAS, 3990 East Broad St., Columbus, OH 43216-5000, or emailed to bipolar@dscc.dla.mil. Since contact information can change, you may want to verify the currency of this address information using the ASSIST Online database at www.dodssp.daps.mil.

AMSC N/A FSC 5962

Downloaded from Arrow.com.

1.3 Absolute maximum ratings.

Supply voltage range	-0.5 V dc to +7.0 V dc
Input voltage range	-1.2 V dc at -18 mA to +7.0 V dc
Storage temperature range	-65° to +150°C
Maximum power dissipation, per device (P_D) 1/	220 mW
Lead temperature (soldering, 10 seconds)	+300°C
Thermal resistance, junction to case (θ_{JC}):	
Cases A, B, C, D, X, and 2	(See MIL-STD-1835)
Junction temperature (T_J) 2/	175°C

1.4 Recommended operating conditions.

Supply voltage (V_{CC})	4.5 V dc to 5.5 V dc
Minimum high level input voltage (V_{IH})	2.0 V dc
Maximum low level input voltage (V_{IL})	0.8 V dc
Case operating temperature range (T_C)	-55° to +125°C

2. APPLICABLE DOCUMENTS

2.1 General. The documents listed in this section are specified in sections 3, 4, or 5 of this specification. This section does not include documents cited in other sections of this specification or recommended for additional information or as examples. While every effort has been made to ensure the completeness of this list, document users are cautioned that they must meet all specified requirements of documents cited in sections 3, 4, or 5 of this specification, whether or not they are listed.

2.2 Government documents.

2.2.1 Specifications and Standards. The following specifications and standards form a part of this specification to the extent specified herein. Unless otherwise specified, the issues of these documents are those cited in the solicitation or contract.

DEPARTMENT OF DEFENSE SPECIFICATIONS

MIL-PRF-38535 - Integrated Circuits (Microcircuits) Manufacturing, General Specification for.

DEPARTMENT OF DEFENSE STANDARDS

MIL-STD-883 - Test Method Standard for Microelectronics.
MIL-STD-1835 - Interface Standard Electronic Component Case Outlines

(Copies of these documents are available online at http://assist.daps.dla.mil/quicksearch/ or www.dodssp.daps.mil or from the Standardization Document Order Desk, 700 Robbins Avenue, Building 4D, Philadelphia, PA 19111-5094.)

2.3 Order of precedence. In the event of a conflict between the text of this specification and the references cited herein, the text of this document takes precedence. Nothing in this document, however, supersedes applicable laws and regulations unless a specific exemption has been obtained.

1/ Must withstand the added P_D due to short-circuit test (e.g., I_{OS}).
2/ Maximum junction temperature should not be exceeded except in accordance with allowable short duration burn-in screening condition in accordance with MIL-PRF-38535.

Downloaded from Arrow.com.

3. REQUIREMENTS

3.1 Qualification. Microcircuits furnished under this specification shall be products that are manufactured by a manufacturer authorized by the qualifying activity for listing on the applicable qualified manufacturers list before contract award (see 4.3 and 6.4).

3.2 Item requirements. The individual item requirements shall be in accordance with MIL-PRF-38535 and as specified herein or as modified in the device manufacturer's Quality Management (QM) plan. The modification in the QM plan shall not affect the form, fit, or function as described herein.

3.3 Design, construction, and physical dimensions. The design, construction, and physical dimensions shall be as specified in MIL-PRF-38535 and herein.

3.3.1 Terminal connections and logic diagram. The terminal connections and logic diagram shall be as specified on figures 1 and 2.

3.3.2 Truth table. The truth table shall be as specified on figure 3.

3.3.3 Schematic circuits. The schematic circuits shall be maintained by the manufacturer and made available to the qualifying activity and the preparing activity upon request.

3.3.4 Case outlines. The case outlines shall be as specified in 1.2.3.

3.4 Lead material and finish. The lead material and finish shall be in accordance with MIL-PRF-38535 (see 6.6).

3.5 Electrical performance characteristics. The electrical performance characteristics are as specified in table I, and apply over the full recommended case operating temperature range, unless otherwise specified.

3.6 Electrical test requirements. The electrical test requirements for each device class shall be the subgroups specified in table II. The electrical tests for each subgroup are described in table III.

3.7 Marking. Marking shall be in accordance with MIL-PRF-38535.

3.8 Microcircuit group assignment. The devices covered by this specification shall be in microcircuit group number 11 (see MIL-PRF-38535, appendix A).

4. VERIFICATION

4.1 Sampling and inspection. Sampling and inspection procedures shall be in accordance with MIL-PRF-38535 or as modified in the device manufacturer's Quality Management (QM) plan. The modification in the QM plan shall not effect the form, fit, or function as described herein.

4.2 Screening. Screening shall be in accordance with MIL-PRF-38535 and shall be conducted on all devices prior to qualification and conformance inspection. The following additional criteria shall apply:

a. The burn-in test duration, test condition, and test temperature, or approved alternatives shall be as specified in the device manufacturer's QM plan in accordance with MIL-PRF-38535. The burn-in test circuit shall be maintained under document control by the device manufacturer's Technology Review Board (TRB) in accordance with MIL-PRF-38535 and shall be made available to the acquiring or preparing activity upon request. The test circuit shall specify the inputs, outputs, biases, and power dissipation, as applicable, in accordance with the intent specified in test method 1015 of MIL-STD-883.

b. Interim and final electrical test parameters shall be as specified in table II, except interim electrical parameters test prior to burn-in is optional at the discretion of the manufacturer.

c. Additional screening for space level product shall be as specified in MIL-PRF-38535.

Downloaded from Arrow.com.

TABLE I. Electrical performance characteristics.

Test	Symbol	Conditions $-55°C \le T_C \le +125°C$ unless otherwise specified	Device type	Limits		Unit
				Min	Max	
High level output voltage	V_{OH}	V_{CC} = 4.5 V, V_{IL} = 0.8 V, I_{OH} = -1 mA, V_{IH} = 2.0 V	01	2.5		V
Low level output voltage	V_{OL}	V_{CC} = 4.5 V, I_{OL} = 20 mA, V_{IH} = 2.0 V, V_{IL} = 0.8 V	01		0.5	V
Input clamp voltage	V_{IC}	V_{CC} = 4.5 V, I_{IN} = -18 mA, T_C = +25°C	01		-1.2	V
Low level input current	I_{IL}	V_{CC} = 5.5 V, V_{IN} = 0.5 V	01	+.02	-.60	mA
High level input current	I_{IH1}	V_{CC} = 5.5 V, V_{IH} = 2.7 V	01		20	µA
	I_{IH2}	V_{CC} = 5.5 V, V_{IH} = 7.0 V	01		100	µA
Short circuit output current 1/	I_{OS}	V_{CC} = 5.5 V, V_{OS} = 0 V	01	-60	-150	mA
Output drive	I_{OD}	V_{CC} = 4.5 V, V_{IN} = 5.5 V, V_{OUT} = 2.5 V	01	60		mA
Supply current	I_{CC}	V_{CC} = 5.5 V, V_{IN} = 0 V	01		40	mA
Propagation delay time low-to-high level input to output	t_{PLH}	V_{CC} = 5.0 V, (see figure 4) C_L = 50 pF ±10%, R_L = 500Ω	01	1.0	20.0	ns
Propagation delay time, high-to-low level input to output	t_{PHL}		01	1.0	21.0	ns

1/ Not more than one output should be shorted at a time.

Downloaded from Arrow.com.

TABLE II. Electrical test requirements.

MIL-PRF-38535 test requirements	Subgroups (see table III)	
	Class S devices	Class B devices
Interim electrical parameters	1	1
Final electrical test parameters	1*, 2, 3, 7, 8, 9, 10, 11	1*, 2, 3, 7, 9
Group A test requirements	1, 2, 3, 7, 8, 9, 10, 11	1, 2, 3, 7, 8, 9, 10, 11
Group B electrical test parameters when using the method 5005 QCI option	1, 2, 3, 9, 10, 11	N/A
Group C end-point electrical parameters	1, 2, 3, 9, 10, 11	1, 2, 3
Group D end-point electrical parameters	1, 2, 3	1, 2, 3

*PDA applies to subgroup 1.

4.3 Qualification inspection. Qualification inspection shall be in accordance with MIL-PRF-38535.

4.4 Technology Conformance inspection (TCI). Technology conformance inspection shall be in accordance with MIL-PRF-38535 and herein for groups A, B, C, and D inspections (see 4.4.1 through 4.4.4).

4.4.1 Group A inspection. Group A inspection shall be in accordance with table III of MIL-PRF-38535 and as follows:

a. Tests shall be as specified in table II herein.

b. Subgroups 4, 5, and 6 shall be omitted.

4.4.2 Group B inspection. Group B inspection shall be in accordance with table II of MIL-PRF-38535.

4.4.3 Group C inspection. Group C inspection shall be in accordance with table IV of MIL-PRF-38535 and as follows:

a. End-point electrical parameters shall be as specified in table II herein.

b. The steady-state life test duration, test condition, and test temperature, or approved alternatives shall be as specified in the device manufacturer's QM plan in accordance with MIL-PRF-38535. The burn-in test circuit shall be maintained under document control by the device manufacturer's Technology Review Board (TRB) in accordance with MIL-PRF-38535 and shall be made available to the acquiring or preparing activity upon request. The test circuit shall specify the inputs, outputs, biases, and power dissipation, as applicable, in accordance with the intent specified in test method 1005 of MIL-STD-883.

4.4.4 Group D inspection. Group D inspection shall be in accordance with table V of MIL-PRF-38535. End-point electrical parameters shall be as specified in table II herein.

4.5 Methods of inspection. Methods of inspection shall be specified as follows:

4.5.1 Voltage and current. All voltages given are referenced to the microcircuit ground terminal. Currents given are conventional and positive when flowing into the referenced terminal.

Downloaded from Arrow.com.

Terminal number	Device type 01	
	Cases A, B, C, and D	Cases X and 2
1	I 6	N/C
2	I 7	I 6
3	NC	I 7
4	I 8	N/C
5	∑ E	N/C
6	∑ O	I 8
7	GND	N/C
8	I 0	∑ E
9	I 1	∑ O
10	I 2	GND
11	I 3	N/C
12	I 4	I 0
13	I 5	I 1
14	V_{CC}	I 2
15		N/C
16		I 3
17		N/C
18		I 4
19		I 5
20		V_{CC}

FIGURE 1. Terminal connections.

Downloaded from Arrow.com.

DEVICE TYPE 01

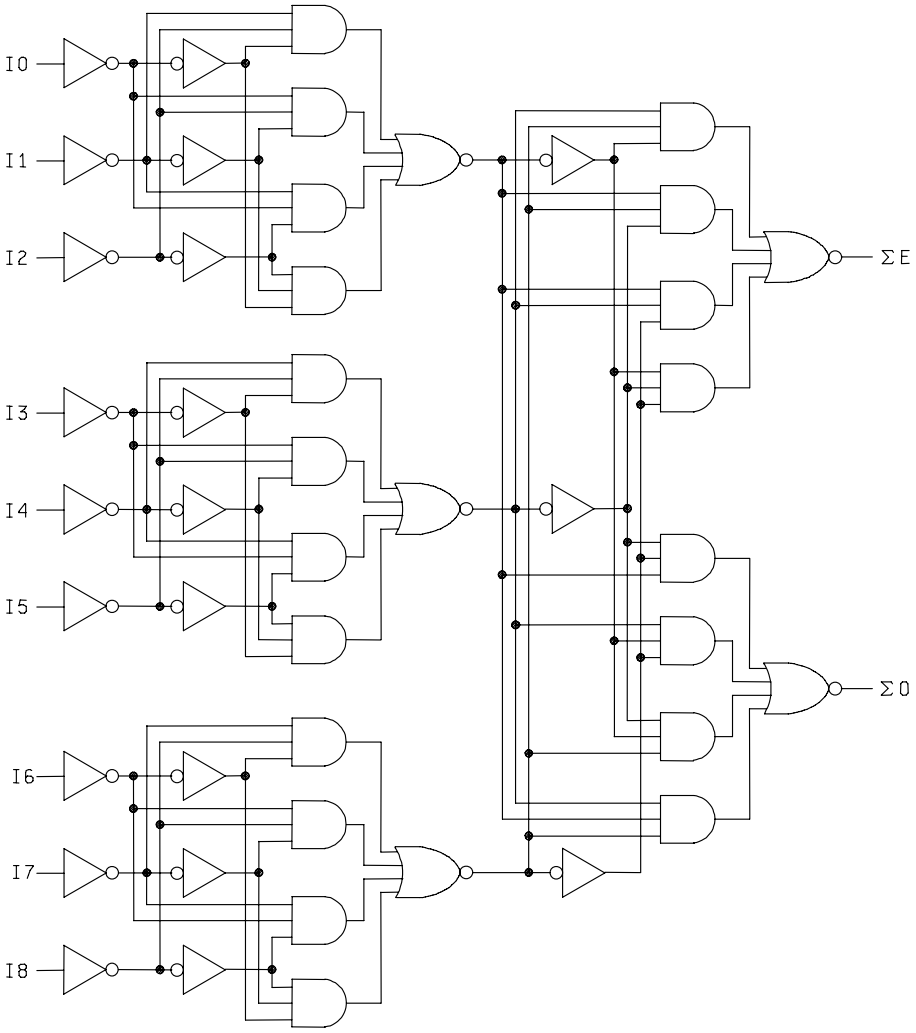

FIGURE 2. Logic diagram.

Device type 01

Number of inputs I 0 - I 8 that are high	Output	
	∑ Even	∑ Odd
0, 2, 4, 6, 8	H	L
1, 3, 5, 7, 9	L	H

H = High level
L = Low level

FIGURE 3. Truth table.

Downloaded from Arrow.com.

DEVICE TYPE 01

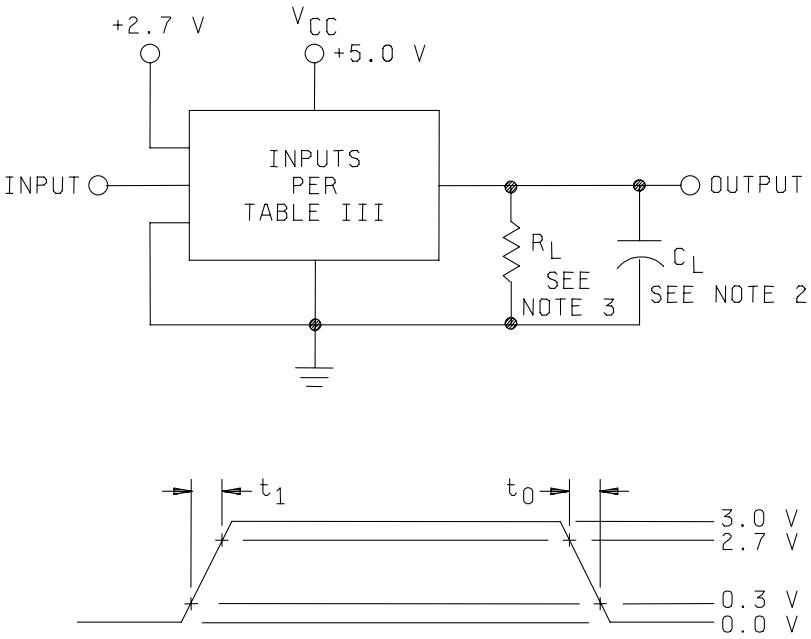

FIGURE 4. Switching time waveforms.

Downloaded from Arrow.com.

DEVICE TYPE 01

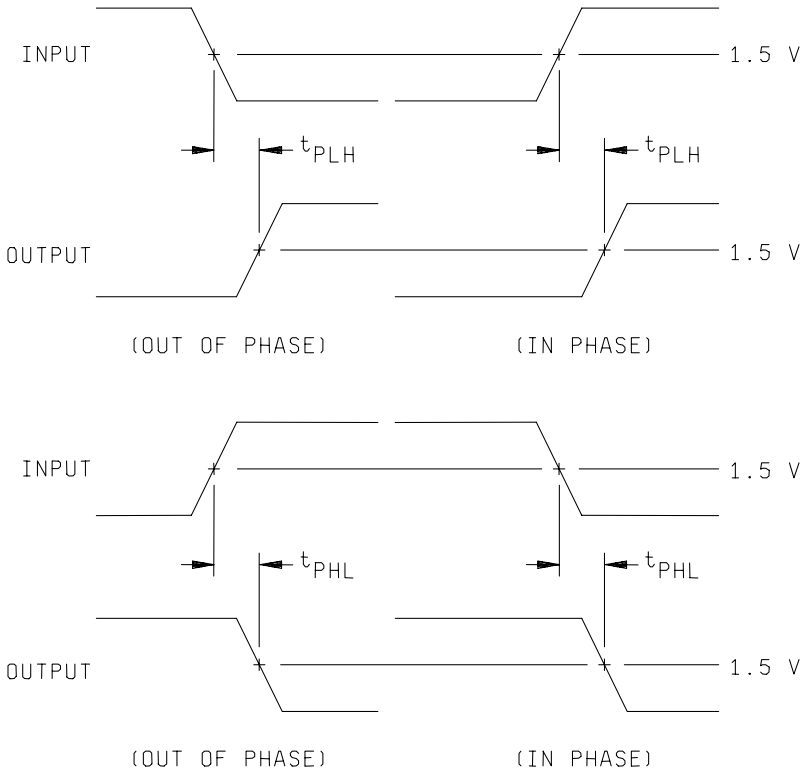

NOTES:

1. Input pulse has the following characteristics:
   $t_1 = t_0 \leq 2.5$ ns, PRR $\leq$ 1 MHz, $Z_{OUT} \approx 50\Omega$.
2. C_L = 50 pF ±10%, including scope probe, wiring and stray capacitance without package in test fixture.
3. $R_L = 500\Omega$ ±5%.

FIGURE 4. Switching time waveforms - Continued.

Downloaded from Arrow.com.

TABLE III. Group A inspection for device type 01.

Terminal conditions (pins not designated may be high ≥ 2.0 V or low ≤ 0.8 V or open).

Subgroup	Symbol	MIL-STD-883 method	Cases A,B,C,D	1	2	3	4	5	6	7	8	9	10	11	12	13	14	Measured terminal	Limits		Unit
			Cases 1/ X, 2	2	3	4	6	8	9	10	12	13	14	16	18	19	20				
			Test no.	I6	I7	NC	I8	∑ E	∑ O	GND	I0	I1	I2	I3	I4	I5	V_{CC}		Min	Max	
1	V_{OL}	3007	1	0.8 V	0.8 V		0.8 V		20 mA	GND	0.8 V	0.8 V	0.8 V	0.8 V	0.8 V	0.8 V	4.5 V	∑ O		0.5	V
Tc = 25°C		3007	2	2.0 V	2.0 V		2.0 V	20 mA		"	2.0 V	2.0 V	2.0 V	2.0 V	2.0 V	2.0 V	"	∑ E		0.5	"
	OH	3006	3	0.8 V	0.8 V		2.0 V		-1 mA	"	0.8 V	0.8 V	2.0 V	0.8 V	0.8 V	2.0 V	"	∑ O	2.5		"
		3006	4	0.8 V	0.8 V		0.8 V	-1 mA		"	0.8 V	0.8 V	0.8 V	0.8 V	0.8 V	0.8 V	"	∑ E	2.5		"
	I C		5	-18 mA						"							"	I6		-1.2	"
			6		-18 mA					"							"	I7		"	"
			7				-18 mA			"							"	I8		"	"
			8							"	-18 mA						"	I0		"	"
			9							"		-18 mA					"	I1		"	"
			10							"			-18 mA				"	I2		"	"
			11							"				-18 mA			"	I3		"	"
			12							"					-18 mA		"	I4		"	"
			13							"						-18 mA	"	I5		"	"
	IH1	3010	14	2.7 V						"							5.5 V	I6		20	µA
		"	15		2.7 V					"							"	I7		"	"
		"	16				2.7 V			"							"	I8		"	"
		"	17							"	2.7 V						"	I0		"	"
		"	18							"		2.7 V					"	I1		"	"
		"	19							"			2.7 V				"	I2		"	"
		"	20							"				2.7 V			"	I3		"	"
		"	21							"					2.7 V		"	I4		"	
		"	22							"						2.7 V	"	I5		"	"
	IH2	"	23	7.0 V						"							5.5 V 5/	I6		100	"
		"	24		7.0 V					"							"	I7		"	"
		"	25				7.0 V			"							"	I8		"	"
		"	26							"	7.0 V						"	I0		"	"
		"	27							"		7.0 V					"	I1		"	"
		"	28							"			7.0 V				"	I2		"	"
		"	29							"				7.0 V			"	I3		"	"
		"	30							"					7.0 V		"	I4		"	"
		"	31							"						7.0 V	"	I5		"	"
	I_{IL}	3009	32	0.5 V						"							"	I6	2/	2/	2/
		"	33		0.5 V					"							"	I7	"	"	"
		"	34				0.5 V			"							"	I8	"	"	"
		"	35							"	0.5 V						"	I0	"	"	"
		"	36							"		0.5 V					"	I1	"	"	"
		"	37							"			0.5 V				"	I2	"	"	"
		"	38							"				0.5 V			"	I3	"	"	"
		"	39							"					0.5 V		"	I4	"	"	"
		"	40							"						0.5 V	"	I5	"	"	"
	OS	3011	41	0.0 V	0.0 V		5.5 V		0.0 V	"	0.0 V	0.0 V	5.5 V	0.0 V	0.0 V	5.5 V	"	∑ O	-60	-150	mA
		3011	42	"	"		0.0 V	0.0 V		"	"	"	0.0 V	"	"	0.0 V	"	∑ E	-60	-150	"
	OD		43	"	"		5.5 V	2.5 V		"	"	"	5.5 V	"	"	5.5 V	4.5 V	∑ E	60	"	"
			44	"	"		0.0 V		2.5 V	"	"	"	0.0 V	"	"	0.0 V	4.5 V	∑ O	60	"	"
	CC	3005	45	"	"		0.0 V			"	"	"	0.0 V	"	"	0.0 V	5.5 V	V_{CC}		40	"
2	Same tests, terminal conditions and limits as for subgroup 1, except T_C = +125°C and V_{IC} tests are omitted.																				
3	Same tests, terminal conditions and limits as for subgroup 1, except T_C = 55°C and V_{IC} tests are omitted.																				

See footnotes at end of table.

Downloaded from Arrow.com.

TABLE III. Group A inspection for device type 01 – Continued.

Terminal conditions (pins not designated may be high ≥ 2.0 V or low ≤ 0.8 V or open).

Subgroup	Symbol	MIL-STD-883 method	Cases A,B,C,D	1	2	3	4	5	6	7	8	9	10	11	12	13	14	Measured terminal	Limits		Unit
			Cases 1/ X, 2	2	3	4	6	8	9	10	12	13	14	16	18	19	20				
			Test no.	I6	I7	NC	I8	∑ E	∑ O	GND	I0	I1	I2	I3	I4	I5	V_{CC}		Min	Max	
7	Func-	3014	46	B	B		B	H	L	GND	B	B	B	B	B	B	3/	All			
Tc = 25°C	tional	"	47	"	B		A	L	H	"	"	B	A	"	B	A	"	outputs			
	tests	"	48	"	A		B	L	H	"	"	A	B	"	A	B	"	"			
4	_/	"	49	"	A		A	H	L	"	"	A	A	"	A	A	"	"			
		"	50	A	B		B	L	H	"	A	B	B	A	B	B	"	"			
		"	51	"	B		A	H	L	"	"	B	A	"	B	A	"	"			
		"	52	"	A		B	H	L	"	"	A	B	"	A	B	"	"			
		"	53	"	"		A	L	H	"	"	"	A	"	"	A	"	"			
		"	54	B	"		B	L	H	"	B	"	B	B	"	B	"	"			
		"	55	"	"		"	H	L	"	"	B	"	"	"	"	"	"			
		"	56	"	"		"	H	L	"	"	A	"	"	B	"	"	"			
		"	57	"	"		"	L	H	"	"	B	"	"	B	"	"	"			
		"	58	"	B		"	H	L	"	"	A	"	"	A	"	"	"			
		"	59	"	"		"	L	H	"	"	A	"	"	B	"	"	"			
		"	60	"	"		"	L	H	"	"	B	"	"	A	"	"	"			
		"	61	"	"		"	H	L	"	"	B	"	"	B	"	"	"			
8	Same tests, terminal conditions, and limits as for subgroup 7 except T_C = +125°C and -55°C.																				
9	t_{PHL}	3003	62	2.7 V	2.7 V		2.7 V	OUT		GND	IN	0.0 V	0.0 V	2.7 V	2.7 V	2.7 V	5.0 V	I0 to ∑ E	1.5	16.0	ns
Tc = 25°C		Fig. 4	63	"	"		"	"		"	"	2.7 V	0.0 V	"	"	"	"	"	"	"	"
		"	64	"	"		"	"		"	"	0.0 V	2.7 V	"	"	"	"	"	"	"	"
		"	65	"	"		"	"		"	"	2.7 V	2.7 V	"	"	"	"	"	"	"	"
		"	66	"	"		"	"		"	0.0 V	IN	0.0 V	"	"	"	"	I1 to ∑ E	"	"	"
		"	67	"	"		"	"		"	2.7 V	"	0.0 V	"	"	"	"	"	"	"	"
		"	68	"	"		"	"		"	0.0 V	"	2.7 V	"	"	"	"	"	"	"	"
		"	69	"	"		"	"		"	2.7 V	"	2.7 V	"	"	"	"	"	"	"	"
		"	70	"	"		"	"		"	0.0 V	0.0 V	IN	"	"	"	"	I2 to ∑ E	"	"	"
		"	71	"	"		"	"		"	2.7 V	0.0 V	"	"	"	"	"	"	"	"	"
		"	72	"	"		"	"		"	0.0 V	2.7 V	"	"	"	"	"	"	"	"	"
		"	73	"	"		"	"		"	2.7 V	"	"	"	"	"	"	"	"	"	"
		"	74	"	"		"		OUT	"	IN	0.0 V	0.0 V	"	"	"	"	I0 to ∑ O	"	"	"
		"	75	"	"		"		"	"	"	2.7 V	0.0 V	"	"	"	"	"	"	"	"
		"	76	"	"		"		"	"	"	0.0 V	2.7 V	"	"	"	"	"	"	"	"
		"	77	"	"		"		"	"	"	2.7 V	2.7 V	"	"	"	"	"	"	"	"
		"	78	"	"		"		"	"	0.0 V	IN	0.0 V	"	"	"	"	I1 to ∑ O	"	"	"
		"	79	"	"		"		"	"	2.7 V	"	0.0 V	"	"	"	"	"	"	"	"
		"	80	"	"		"		"	"	0.0 V	"	2.7 V	"	"	"	"	"	"	"	"
		"	81	"	"		"		"	"	2.7 V	"	2.7 V	"	"	"	"	"	"	"	"
		"	82	"	"		"		"	"	0.0 V	0.0 V	IN	"	"	"	"	I2 to ∑ O	"	"	"
		"	83	"	"		"		"	"	2.7 V	0.0 V	"	"	"	"	"	"	"	"	"
		"	84	"	"		"		"	"	0.0 V	2.7 V	"	"	"	"	"	"	"	"	"
		"	85	"	"		"		"	"	2.7 V	2.7 V	"	"	"	"	"	"	"	"	"

See footnotes at end of table.

Downloaded from Arrow.com.

TABLE III. Group A inspection for device type 01 – Continued.
Terminal conditions (pins not designated may be high ≥ 2.0 V or low ≤ 0.8 V or open).

Subgroup	Symbol	MIL-STD-883 method	Cases A,B,C,D	1	2	3	4	5	6	7	8	9	10	11	12	13	14	Measured terminal	Limits		Unit
			Cases 1/ X, 2	2	3	4	6	8	9	10	12	13	14	16	18	19	20				
			Test no.	I6	I7	NC	I8	∑ E	∑ O	GND	I0	I1	I2	I3	I4	I5	V_{CC}		Min	Max	
9	t_{PHL}	3003	86	2.7 V	2.7 V		2.7 V	OUT		GND	2.7 V	2.7 V	2.7 V	IN	0.0 V	0.0 V	5.0 V	I3 to ∑ E	1.5	16.0	ns
Tc = 25°C		Fig. 4	87	"	"		"	"		"	"	"	"	"	2.7 V	0.0 V	"	"	"	"	"
		"	88	"	"		"	"		"	"	"	"	"	0.0 V	2.7 V	"	"	"	"	"
		"	89	"	"		"	"		"	"	"	"	"	2.7 V	2.7 V	"	"	"	"	"
		"	90	"	"		"	"		"	"	"	"	0.0 V	IN	0.0 V	"	I4 to ∑ E	"	"	"
		"	91	"	"		"	"		"	"	"	"	2.7 V	"	0.0 V	"	"	"	"	"
		"	92	"	"		"	"		"	"	"	"	0.0 V	"	2.7 V	"	"	"	"	"
		"	93	"	"		"	"		"	"	"	"	2.7 V	"	2.7 V	"	"	"	"	"
		"	94	"	"		"	"		"	"	"	"	0.0 V	0.0 V	IN	"	I5 to ∑ E	"	"	"
		"	95	"	"		"	"		"	"	"	"	2.7 V	0.0 V	"	"	"	"	"	"
		"	96	"	"		"	"		"	"	"	"	0.0 V	2.7 V	"	"	"	"	"	"
		"	97	"	"		"	"		"	"	"	"	2.7 V	2.7 V	"	"	"	"	"	"
		"	98	"	"		"		OUT	"	"	"	"	IN	0.0 V	0.0 V	"	I3 to ∑ O	"	"	"
		"	99	"	"		"		"	"	"	"	"	"	2.7 V	0.0 V	"	"	"	"	"
		"	100	"	"		"		"	"	"	"	"	"	0.0 V	2.7 V	"	"	"	"	"
		"	101	"	"		"		"	"	"	"	"	"	2.7 V	2.7 V	"	"	"	"	"
		"	102	"	"		"		"	"	"	"	"	0.0 V	IN	0.0 V	"	I4 to ∑ O	"	"	"
		"	103	"	"		"		"	"	"	"	"	2.7 V	"	0.0 V	"	"	"	"	"
		"	104	"	"		"		"	"	"	"	"	0.0 V	"	2.7 V	"	"	"	"	"
		"	105	"	"		"		"	"	"	"	"	2.7 V	"	2.7 V	"	"	"	"	"
		"	106	"	"		"		"	"	"	"	"	0.0 V	0.0 V	IN	"	I5 to ∑ O	"	"	"
		"	107	"	"		"		"	"	"	"	"	2.7 V	0.0 V	"	"	"	"	"	"
		"	108	"	"		"		"	"	"	"	"	0.0 V	2.7 V	"	"	"	"	"	"
		"	109	"	"		"		"	"	"	"	"	2.7 V	2.7 V	"	"	"	"	"	"
		"	110	IN	0.0 V		0.0 V	OUT		"	"	"	"	"	"	2.7 V	"	I6 to ∑ E	"	"	"
		"	111	"	2.7 V		0.0 V	"		"	"	"	"	"	"	"	"	"	"	"	"
		"	112	"	0.0 V		2.7 V	"		"	"	"	"	"	"	"	"	"	"	"	"
		"	113	"	2.7 V		2.7 V	"		"	"	"	"	"	"	"	"	"	"	"	"
		"	114	0.0 V	IN		0.0 V	" "			"	"	"	"	"	"	"	I7 to ∑ E	"	"	"
		"	115	2.7 V	"		0.0 V	" "			"	"	"	"	"	"	"	"	"	"	"
		"	116	0.0 V	"		2.7 V	" "			"	"	"	"	"	"	"	"	"	"	"
		"	117	2.7 V	"		2.7 V	" "			"	"	"	"	"	"	"	"	"	"	"
		"	118	0.0 V	0.0 V		IN	" "			"	"	"	"	"	"	"	I8 to ∑ E	"	"	"
		"	119	2.7 V	0.0 V		"	" "			"	"	"	"	"	"	"	"	"	"	"
		"	120	0.0 V	2.7 V		"	" "			"	"	"	"	"	"	"	"	"	"	"
		"	121	2.7 V	2.7 V		"	" "			"	"	"	"	"	"	"	"	"	"	"

See footnotes at end of table.

Downloaded from Arrow.com.

TABLE III. Group A inspection for device type 01 – Continued.
Terminal conditions (pins not designated may be high ≥ 2.0 V or low ≤ 0.8 V or open).

Subgroup	Symbol	MIL-STD-883 method	Cases A,B,C,D	1	2	3	4	5	6	7	8	9	10	11	12	13	14	Measured terminal	Limits		Unit
			Cases 1/ X, 2	2	3	4	6	8	9	10	12	13	14	16	18	19	20				
			Test no.	I6	I7	NC	I8	∑ E	∑ O	GND	I0	I1	I2	I3	I4	I5	V_{CC}		Min	Max	
9	t_{PHL}	3003	122	IN	0.0 V		0.0 V		OUT	GND	2.7 V	2.7 V	2.7 V	2.7 V	2.7 V	2.7 V	5.0 V	I6 to ∑ O	1.5	16.0	ns
Tc = 25°C		Fig. 4	123	"	2.7 V		0.0 V		"	"	"	"	"	"	"	"	"	"	"	"	"
		"	124	"	0.0 V		2.7 V		"	"	"	"	"	"	"	"	"	"	"	"	"
		"	125	"	2.7 V		2.7 V		"	"	"	"	"	"	"	"	"	"	"	"	"
		"	126	0.0 V	IN		0.0 V		"	"	"	"	"	"	"	"	"	I7 to ∑ O	"	"	"
		"	127	2.7 V	"		0.0 V		"	"	"	"	"	"	"	"	"	"	"	"	"
		"	128	0.0 V	"		2.7 V		"	"	"	"	"	"	"	"	"	"	"	"	"
		"	129	2.7 V	"		2.7 V		"	"	"	"	"	"	"	"	"	"	"	"	"
		"	130	0.0 V	0.0 V		IN		"	"	"	"	"	"	"	"	"	I8 to ∑ O	"	"	"
		"	131	2.7 V	0.0 V		"		"	"	"	"	"	"	"	"	"	"	"	"	"
		"	132	0.0 V	2.7 V		"		"	"	"	"	"	"	"	"	"	"	"	"	"
		"	133	2.7 V	"		"		"	"	"	"	"	"	"	"	"	"	"	"	"
t	PLH	"	134	"	"		2.7 V	OUT		"	IN	0.0 V	0.0 V	"	"	"	"	I0 to ∑ E	"	15.0	"
		"	135	"	"		"	"		"	"	2.7 V	0.0 V	"	"	"	"	"	"	"	"
		"	136	"	"		"	"		"	"	0.0 V	2.7 V	"	"	"	"	"	"	"	"
		"	137	"	"		"	"		"	"	2.7 V	2.7 V	"	"	"	"	"	"	"	"
		"	138	"	"		"	"		"	0.0 V	IN	0.0 V	"	"	"	"	I1 to ∑ E	"	"	"
		"	139	"	"		"	"		"	2.7 V	"	0.0 V	"	"	"	"	"	"	"	"
		"	140	"	"		"	"		"	0.0 V	"	2.7 V	"	"	"	"	"	"	"	"
		"	141	"	"		"	"		"	2.7 V	"	2.7 V	"	"	"	"	"	"	"	"
		"	142	"	"		"	"		"	0.0 V	0.0 V	IN	"	"	"	"	I2 to ∑ E	"	"	"
		"	143	"	"		"	"		"	2.7 V	0.0 V	"	"	"	"	"	"	"	"	"
		"	144	"	"		"	"		"	0.0 V	2.7 V	"	"	"	"	"	"	"	"	"
		"	145	"	"		"	"		"	2.7 V	"	"	"	"	"	"	"	"	"	"
		"	146	"	"		"		OUT	"	IN	0.0 V	0.0 V	"	"	"	"	I0 to ∑ O	"	"	"
		"	147	"	"		"		"	"	"	2.7 V	0.0 V	"	"	"	"	"	"	"	"
		"	148	"	"		"		"	"	"	0.0 V	2.7 V	"	"	"	"	"	"	"	"
		"	149	"	"		"		"	"	"	2.7 V	2.7 V	"	"	"	"	"	"	"	"
		"	150	"	"		"		"	"	0.0 V	IN	0.0 V	"	"	"	"	I1 to ∑ O	"	"	"
		"	151	"	"		"		"	"	2.7 V	"	0.0 V	"	"	"	"	"	"	"	"
		"	152	"	"		"		"	"	0.0 V	"	2.7 V	"	"	"	"	"	"	"	"
		"	153	"	"		"		"	"	2.7 V	"	2.7 V	"	"	"	"	"	"	"	"
		"	154	"	"		"		"	"	0.0 V	0.0 V	IN	"	"	"	"	I2 to ∑ O	"	"	"
		"	155	"	"		"		"	"	2.7 V	0.0 V	"	"	"	"	"	"	"	"	"
		"	156	"	"		"		"	"	0.0 V	2.7 V	"	"	"	"	"	"	"	"	"
		"	157	"	"		"		"	"	2.7 V	"	"	"	"	"	"	"	"	"	"
		"	158	"	"		"	OUT		"	"	"	2.7 V	IN	0.0 V	0.0 V	"	I3 to ∑ E	"	"	"
		"	159	"	"		"	"		"	"	"	"	"	2.7 V	0.0 V	"	"	"	"	"
		"	160	"	"		"	"		"	"	"	"	"	0.0 V	2.7 V	"	"	"	"	"
		"	161	"	"		"	"		"	"	"	"	"	2.7 V	2.7 V	"	"	"	"	"

See footnotes at end of table.

Downloaded from Arrow.com.

TABLE III. Group A inspection for device type 01 – Continued.
Terminal conditions (pins not designated may be high ≥ 2.0 V or low ≤ 0.8 V or open).

Subgroup	Symbol	MIL-STD-883 method	Cases A,B,C,D	1	2	3	4	5	6	7	8	9	10	11	12	13	14	Measured terminal	Limits		Unit
			Cases 1/ X, 2	2	3	4	6	8	9	10	12	13	14	16	18	19	20				
			Test no.	I6	I7	NC	I8	∑ E	∑ O	GND	I0	I1	I2	I3	I4	I5	V_{CC}		Min	Max	
9	t_{PLH}	3003	162	2.7 V	2.7 V		2.7 V	OUT		GND	2.7 V	2.7 V	2.7 V	0.0 V	IN	0.0 V	5.0 V	I4 to ∑ E	1.5	15.0	ns
Tc = 25°C		Fig. 4	163	"	"		"	"		"	"	"	"	2.7 V	"	0.0 V	"	"	"	"	"
		"	164	"	"		"	"		"	"	"	"	0.0 V	"	2.7 V	"	"	"	"	"
		"	165	"	"		"	"		"	"	"	"	2.7 V	"	2.7 V	"	"	"	"	"
		"	166	"	"		"	"		"	"	"	"	0.0 V	0.0 V	IN	"	I5 to ∑ E	"	"	"
		"	167	"	"		"	"		"	"	"	"	2.7 V	0.0 V	"	"	"	"	"	"
		"	168	"	"		"	"		"	"	"	"	0.0 V	2.7 V	"	"	"	"	"	"
		"	169	"	"		"	"		"	"	"	"	2.7 V	2.7 V	"	"	"	"	"	"
		"	170	"	"		"		OUT	"	"	"	"	IN	0.0 V	0.0 V	"	I3 to ∑ O	"	"	"
		"	171	"	"		"		"	"	"	"	"	"	2.7 V	0.0 V	"	"	"	"	"
		"	172	"	"		"		"	"	"	"	"	"	0.0 V	2.7 V	"	"	"	"	"
		"	173	"	"		"		"	"	"	"	"	"	2.7 V	2.7 V	"	"	"	"	"
		"	174	"	"		"		"	"	"	"	"	0.0 V	IN	0.0 V	"	I4 to ∑ O	"	"	"
		"	175	"	"		"		"	"	"	"	"	2.7 V	"	0.0 V	"	"	"	"	"
		"	176	"	"		"		"	"	"	"	"	0.0 V	"	2.7 V	"	"	"	"	"
		"	177	"	"		"		"	"	"	"	"	2.7 V	"	2.7 V	"	"	"	"	"
		"	178	"	"		"		"	"	"	"	"	0.0 V	0.0 V	IN	"	I5 to ∑ O	"	"	"
		"	179	"	"		"		"	"	"	"	"	2.7 V	0.0 V	"	"	"	"	"	"
		"	180	"	"		"		"	"	"	"	"	0.0 V	2.7 V	"	"	"	"	"	"
		"	181	"	"		"		"	"	"	"	"	2.7 V	2.7 V	"	"	"	"	"	"
		"	182	IN	0.0 V		0.0 V	OUT		"	"	"	"	"	"	2.7 V	"	I6 to ∑ E	"	"	"
		"	183	"	2.7 V		0.0 V	"		"	"	"	"	"	"	"	"	"	"	"	"
		"	184	"	0.0 V		2.7 V	"		"	"	"	"	"	"	"	"	"	"	"	"
		"	185	"	2.7 V		2.7 V	"		"	"	"	"	"	"	"	"	"	"	"	"
		"	186	0.0 V	IN		0.0 V	" "			"	"	"	"	"	"	"	I7 to ∑ E	"	"	"
		"	187	2.7 V	"		0.0 V	" "			"	"	"	"	"	"	"	"	"	"	"
		"	188	0.0 V	"		2.7 V	" "			"	"	"	"	"	"	"	"	"	"	"
		"	189	2.7 V	"		2.7 V	" "			"	"	"	"	"	"	"	"	"	"	"
		"	190	0.0 V	0.0 V		IN	" "			"	"	"	"	"	"	"	I8 to ∑ E	"	"	"
		"	191	2.7 V	0.0 V		"	" "			"	"	"	"	"	"	"	"	"	"	"
		"	192	0.0 V	2.7 V		"	" "			"	"	"	"	"	"	"	"	"	"	"
		"	193	2.7 V	2.7 V		"	" "			"	"	"	"	"	"	"	"	"	"	"
		"	194	IN	0.0 V		0.0 V		OUT	"	"	"	"	"	"	"	"	I6 to ∑ O	"	"	"
		"	195	"	2.7 V		0.0 V		"	"	"	"	"	"	"	"	"	"	"	"	"
		"	196	"	0.0 V		2.7 V		"	"	"	"	"	"	"	"	"	"	"	"	"
		"	197	"	2.7 V		2.7 V		"	"	"	"	"	"	"	"	"	"	"	"	"
		"	198	0.0 V	IN		0.0 V		"	"	"	"	"	"	"	"	"	I7 to ∑ O	"	"	"
		"	199	2.7 V	"		0.0 V		"	"	"	"	"	"	"	"	"	"	"	"	"
		"	200	0.0 V	"		2.7 V		"	"	"	"	"	"	"	"	"	"	"	"	"
		"	201	2.7 V	"		2.7 V		"	"	"	"	"	"	"	"	"	"	"	"	"

See footnotes at end of table.

Downloaded from Arrow.com.

Downloaded from Arrow.com.

TABLE III. Group A inspection for device type 01 – Continued.
Terminal conditions (pins not designated may be high ≥ 2.0 V or low ≤ 0.8 V or open).

Subgroup	Symbol	MIL-STD-883 method	Cases A,B,C,D	1	2	3	4	5	6	7	8	9	10	11	12	13	14	Measured terminal	Limits		Unit
			Cases 1/ X, 2	2	3	4	6	8	9	10	12	13	14	16	18	19	20				
			Test no.	I6	I7	NC	I8	∑ E	∑ O	GND	I0	I1	I2	I3	I4	I5	V_{CC}		Min	Max	
9	t_{PLH}	3003	202	0.0 V	0.0 V		IN		OUT	GND	2.7 V	2.7 V	2.7 V	2.7 V	2.7 V	2.7 V	5.0 V	I8 to ∑ O	1.5	15.0	ns
Tc = 25°C		Fig. 4	203	2.7 V	0.0 V		"		"	"	"	"	"	"	"	"	"	"	"	"	"
		"	204	0.0 V	2.7 V		"		"	"	"	"	"	"	"	"	"	"	"	"	"
		"	205	2.7 V	2.7 V		"		"	"	"	"	"	"	"	"	"	"	"	"	"
10	t_{PHL}	Same tests and terminal conditions as for subgroup 9, except T_C = +125°C and limits as shown.																	1.0	21.0	"
t	PHL																		1.0	20.0	"
11	Same tests, terminal conditions and limits as for subgroup 10, except T_C = -55° C.																				

1/ For cases 2 and X, pins not referenced are N/C.

2/ I_{IL} limits shall be as follows:

Parameters	Min/Max limits in mA for circuit		
	A	B	C
I_{IL}	-.25/-.60	-.03/-.60	-.02/+.02

3/ Perform function sequence at V_{CC} = 4.5 V and repeat at V_{CC} = 5.5 V.

4/ A = 4.5 V, B = 0.0 V,
H ≥ 2.5 V, L ≤ 0.5 V with high speed checker double comparator, or
H > 1.5 V, L < 1.5 V with high speed checker single comparator.

5/ For device type possessing NPN input structure V_{CC} = 0.0 V.

5. PACKAGING

5.1 Packaging requirements. For acquisition purposes, the packaging requirements shall be as specified in the contract or order (see 6.2). When actual packaging of materiel is to be performed by DoD or in-house contractor personnel, these personnel need to contact the responsible packaging activity to ascertain packaging requirements. Packaging requirements are maintained by the Inventory Control Point's packaging activity within the Military Service or Defense Agency, or within the military service's system command. Packaging data retrieval is available from the managing Military Department's or Defense Agency's automated packaging files, CD-ROM products, or by contacting the responsible packaging activity.

6. NOTES

6.1 Intended use. Microcircuits conforming to this specification are intended for original equipment design applications and logistic support of existing equipment.

6.2 Acquisition requirements. Acquisition documents should specify the following:

a. Title, number, and date of the specification.

b. PIN and compliance identifier, if applicable (see 1.2).

c. Requirements for delivery of one copy of the conformance inspection data pertinent to the device inspection lot to be supplied with each shipment by the device manufacturer, if applicable.

d. Requirements for certificate of compliance, if applicable.

e. Requirements for notification of change of product or process to contracting activity in addition to notification to the qualifying activity, if applicable.

f. Requirements for failure analysis (including required test condition of method 5003 of MIL-STD-883), corrective action, and reporting of results, if applicable.

g. Requirements for product assurance options.

h. Requirements for special carriers, lead lengths, or lead forming, if applicable. These requirements should not affect the part number. Unless otherwise specified, these requirements will not apply to direct purchase by or direct shipment to the Government.

i. Requirements for "JAN" marking.

j. Packaging requirements (see 5.1).

6.3 Superseding information. The requirements of MIL-M-38510 have been superseded to take advantage of the available Qualified Manufacturer Listing (QML) system provided by MIL-PRF-38535. Previous references to MIL-M-38510 in this document have been replaced by appropriate references to MIL-PRF-38535. All technical requirements now consist of this specification and MIL-PRF-38535. The MIL-M-38510 specification sheet number and PIN have been retained to avoid adversely impacting existing government logistics systems and contractor's parts lists.

6.4 Qualification. With respect to products requiring qualification, awards will be made only for products which are, at the time of award of contract, qualified for inclusion in Qualified Manufacturers List QML-38535 whether or not such products have actually been so listed by that date. The attention of the contractors is called to these requirements, and manufacturers are urged to arrange to have the products that they propose to offer to the Federal Government tested for qualification in order that they may be eligible to be awarded contracts or purchase orders for the products covered by this specification. Information pertaining to qualification of products may be obtained from DSCC-VQ, 3990 E. Broad Street, Columbus, Ohio 43123-1199.

Downloaded from Arrow.com.

6.5 Abbreviations, symbols, and definitions. The abbreviations, symbols, and definitions used herein are defined in MIL-PRF-38535, MIL-HDBK-1331, and as follows:

GND ..... Ground zero voltage potential
I_{IN} ..... Current flowing into an input terminal
V_{IN} ..... Voltage level at an input terminal

6.6 Logistic support. Lead materials and finishes (see 3.4) are interchangeable. Unless otherwise specified, microcircuits acquired for Government logistic support will be acquired to device class B (see 1.2.2), lead material and finish A (see 3.4). Longer length leads and lead forming should not affect the part number.

6.7 Substitutability. The cross-reference information below is presented for the convenience of users. Microcircuits covered by this specification will functionally replace the listed generic-industry type. Generic-industry microcircuit types may not have equivalent operational performance characteristics across military temperature ranges or reliability factors equivalent to MIL-M-35810 device types and may have slight physical variations in relation to case size. The presence of this information should not be deemed as permitting substitution of generic-industry types for MIL-M-38510 types or as a waiver of any of the provisions of MIL-PRF-38535.

Military device type	Generic-industry type
01	54F280

6.8 Manufacturers' designation. Manufacturers' circuits which form a part of this specification are designated with an "X" as shown in table IV herein.

TABLE IV. Manufacturers' designations.

Device type	Circuits			
	A	B	C	D
	National Semiconductor/ Fairchild Semiconductor	Motorola Inc.	Signetics Corp.	Texas Instruments
01	X	X	X	X

6.9 Changes from previous issue. Marginal notations are not used in this revision to identify changes with respect to the previous issue due to the extensiveness of the changes.

Custodians:
Army - CR
Navy - EC
Air Force - 11
DLA - CC

Preparing activity:
DLA - CC

(Project 5962-2040)

Review activities:
Army - MI, SM
Navy - AS, CG, MC, SH, TD
Air Force - 03, 19, 99

NOTE: The activities listed above were interested in this document as of the date of this document. Since organizations and responsibilities can change, you should verify the currency of the information above using the ASSIST Online database at www.dodssp.daps.mil.

Downloaded from Arrow.com.