used for: D-SUB HD

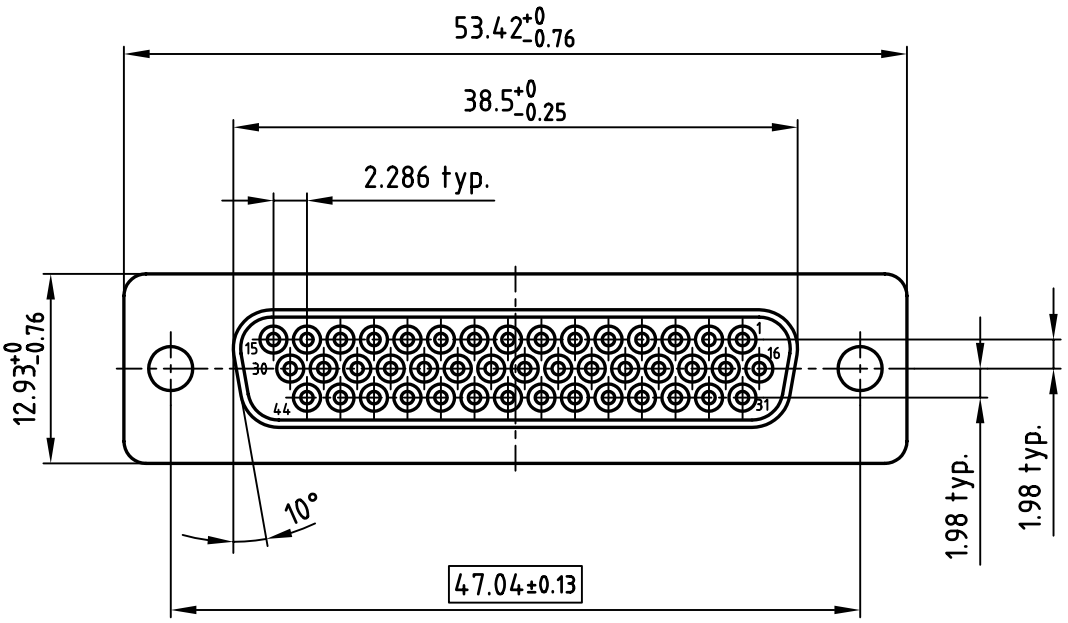


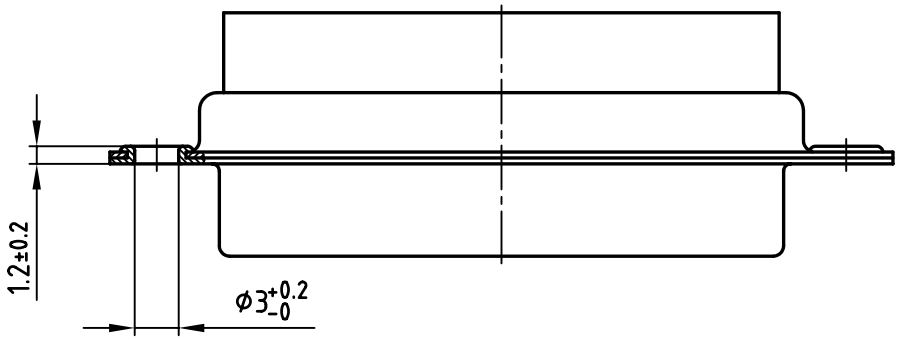


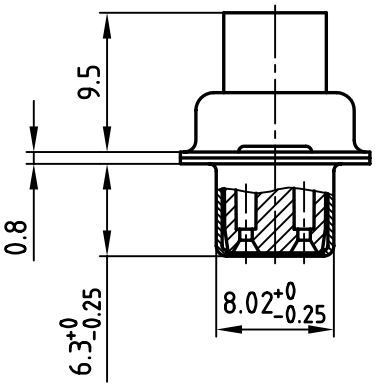


## NOTES:

1. METALSHELLS: STEEL; TIN PLATED
2. INSULATORS: PA GF; UL 94 V-0; BLACK
3. ☐ = CRITICAL DIMENSION: SPC

Directive 2002/95/EC „RoHS" Compliant

THIS DRAWING MAY NOT BE COPIED OR REPRODUCED IN ANY WAY, AND MAY NOT BE PASSED ON TO A THIRD PARTY WITHOUT WRITTEN PERMISSION. OWNERSHIP AND COPYRIGHT OF CONEC GmbH

DO NOT ALTER CAD DRAWING BY HAND

| rev. | description | date | name |
|---|---|---|---|

tolerance

| 1999 | date | name |
|---|---|---|
| drawn | 21.06. | Barcinski |
| appd. | 21.06. | Mickenbecker |
| norm | | |
| d-old | | |

CONEC®

scale: 2:1

material: SEE NOTES

title: D-SUB HD Female
Crimp-Version 44pos.

dwg no: 16K1IINA

CAD/ REL.14

DIN-A 4

sh: 1/1

product no: 164X11969X (A0382161)

Downloaded from Arrow.com.