FUJITSU

POWER RELAY
1 POLE - 10A
VS Series

■ FEATURES

- UL, CSA, VDE, SEV, CQC recognized
- TV-5 is available
- Working class: C
- UL class B (130°C) coil wire insulation
- Type of service: continuous duty
- Heavy duty miniature slim type power relay
- High isolation in small package
  - Insulation distance: 8 mm
  - Dielectric strength: 5,000 VAC (between coil and contacts)
  - Surge strength: 10,000 V
- Standard and high sensitivity types available
- Flux proof type and plastic sealed type available
- Cadmium free is available
- RoHS compliant. Please see page 8 for more information



■ PARTNUMBER INFORMATION

[Example] VS (a) - 12 (*)(b) S (c) M (d) B (e) U (f) - N (g) - UC (h)

(a)	Relay type	VS	: VS-Series
(b)	Coil rated voltage	12	: 3.....100 VDC Coil rating table at page 3
(c)	Coil type	Nil S	: Standard type (700-750mW) : High sensitive type (530mW)
(d)	Contact configuration	T M	: 1 form C (SPDT) : 1 form A (SPST-NO)
(e)	Enclosure	B C K	: Flux proof type, RTII : Plastic sealed type (with type), RTIII : Plastic sealed type, RTIII
(f)	TV type	Nil U	: TV rating type : Non TV rating type (standard type)
(g)	Contact material	N Nil 5 Nil E	: Silver alloy (10A) ($AgSnO_2$) : Silver-cadmium oxide (TV-5 rating) (AgCdO) : Silver-cadmium oxide (non TV rating) (AgCdO) : Gold overlay silver-nickel (non TV rating) (AgNi+Au) : Silver-nickel (non TV rating) (AgNi)
(h)	Safety standard	UC SM2 IM2	: UL, CSA : UL, CSA, VDE : UL, CSA, VDE, SEV

Note: Actual marking omits the hyphen (-) of (*)

Downloaded from Arrow.com.

■ SPECIFICATION

			TV-5 Rating Type		Standard Type		
			VS - ( ) M	VS - ( ) MN	VS - ( )U-5	VS - ( ) U-N	VS - ( ) U VS - ( ) U-E
Contact Data	Configuration		1 form A (SPST-NO), 1 form C (SPDT)				
	Construction		Single				
	Material		Silver cadmium-oxide	Silver alloy	Silver cadmium-oxide	Silver alloy	Gold overlay silver nickel
	Resistance (initial)		Max. 100mΩ at 6VDC, 1A				
	Contact rating		10A, 240VAC / 24VDC				
	Max. carrying current *1		14A				
	Max. switching voltage		250VAC, 150 VDC				
	Max. switching power		2,400VA, 240W				
	Max. inrush current (at lamp load)		78A, 120VAC		-		
	Min. switching load *2		100 mA, 5 VDC (M, 5, E), 10mA 5 VDC (VS-)				
Life	Mechanical		Min. 20 x 10^6 operations				
	Electrical	Contact rating	Min. 100 x 10^3 operations				
		Motor	Min. 30 x 10^3 operations				
		Lamp	Min. 50 x 10^3 operations (at 78A, 120VAC, lamp) Min. 15 x 10^3 operations (high senstive type)		-		
Coil Data	Rated power (at 20 °C)		700-750 mW standard type, 530 mW high sensitive type				
	Operate power (at 20 °C)		350-370 mW standard type, 350 mW high sensitive type				
	Operating temperature range		-40 °C to +85 °C standard type, 40 °C to +75 °C high sensitive type (no frost)				
Timing Data	Operate (at nominal voltage)		Max. 15 ms (without bounce)				
	Release (at nominal voltage)		Max. 10 ms (no diode)				
Insulation	Resistance (initial)		Min. 1,000MΩ at 500VDC				
	Dielectric strength	Open contacts	1,000VAC (50/60Hz) 1min., 10mA detection current				
		Contacts to coil	5,000VAC (50/60Hz) 1min., 10mA detection current				
	Surge strength	Coil to contacts	10,000V, 1.2 x 50μs standard wave				
	Clearance		8 mm				
	Creepage		8 mm				
	EN61810-1, VDE0435	Voltage	250 V				
		Pollution degree	2				
		Material group	III				
Other	Vibration resistance	Misoperation	10 to 55Hz double amplitude 1.5 mm				
		Endurance	10 to 55Hz double amplitude 1.5 mm				
	Shock	Misoperation	Min. 100m/s² (11 ± 1ms)				
		Endurance	Min. 1,000m/s² (6 ± 1ms)				
	Weight		Approximately 17 g				

*1 When max. carrying current is more than 10A, PCB layout needs to be considered.
*2 Minimum switching loads mentioned above are reference values. Please perform the confirmation test with actual load before production since reference values may vary according to switching frequencies, environmental conditions and expected reliability levels.

Downloaded from Arrow.com.

■ COIL RATING

Standard type

Coil Code	Rated Coil Voltage (VDC)	Coil Resistance +/- 10% (Ohm)	Must Operate Voltage (VDC) *	Must Release Voltage (VDC) *	Max. Coil Voltage (VDC)	Rated Power (mW)
3	3	12.5	2.1	0.3	4.95	720
5	5	36	3.5	0.5	8.25	700
6	6	50	4.2	0.6	9.90	720
9	9	115	6.3	0.9	14.85	700
12	12	200	8.4	1.2	19.8	720
14	14	280	9.8	1.4	23.1	700
18	18	460	12.6	1.8	29.7	
24	24	820	16.8	2.4	39.6	
36	36	1,850	25.2	3.6	59.4	
48	48	3,300	33.6	4.8	79.2	
60	60	5,100	42	6	99	
100	100	13,400	70	10	165	750

High sensitive type (250 mW)

Coil Code	Rated Coil Voltage (VDC)	Coil Resistance +/- 10% (Ohm)	Must Operate Voltage (VDC) *	Must Release Voltage (VDC) *	Max. Coil Voltage (VDC)	Rated Power (mW)
3	3	17	2.1	0.3	4.95	530
5	5	47	3.5	0.5	8.25	
6	6	68	4.2	0.6	9.90	
9	9	115	6.3	0.9	14.85	
12	12	270	8.4	1.2	19.8	
14	14	370	9.8	1.4	23.1	
18	18	610	12.6	1.8	29.7	
24	24	1,000	16.8	2.4	39.6	
36	36	2,450	25.2	3.6	59.4	
48	48	4,400	33.6	4.8	79.2	
60	60	6,800	42	6	99	
100	100	18,860	70	10	165	

Note: All values in the tables are valid for 20°C and zero contact current.
* Specified operate values are valid for pulse wave voltage.

Downloaded from Arrow.com.

■ SAFETY STANDARDS

Type	Compliance	Contact rating
UL	UL 508 E 56140	Flammability: UL 94-V0 (plastics) [TV-rating VS-( )M, SM, M-N] 10A, 240VAC/24VDC (resistive) 1/3 hp, 240VAC/120VAC Pilot duty: C150 TV-5 120 VAC [UN, SU-N] 15A, 120VAC/24VDC (resistive) 10A, 240VAC (resistive) 1/3 hp, 240VAC/120VAC Pilot duty: B150 [VS-( ) ( ) U-( ), ( )S( ) U-( )] 10A, 240VAC/24VDC (resistive) 1/3 hp, 240VAC/120VAC Pilot duty: C150
CSA	C22.2 No. 14 LR 35579	
VDE	0435, 0631, 0700, 0860 40014665	10A, 250VAC, cos φ1 2.9A, 250VAC, cos φ 0.4 10A, 24VDC, 0msec

Also complies with SEV, CQC

■ CHARACTERISTIC DATA

Timing (Standard Type)

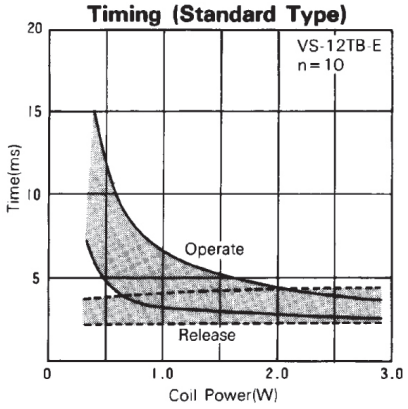

Timing (High Sensitive Type)

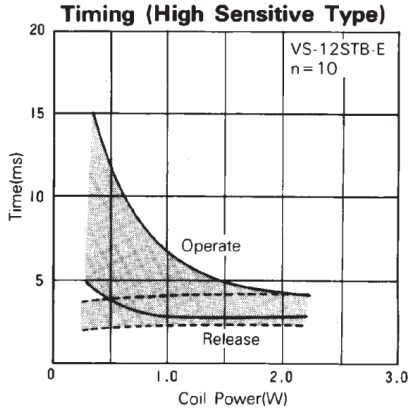

Coil Temperature Rise (Standard Type)

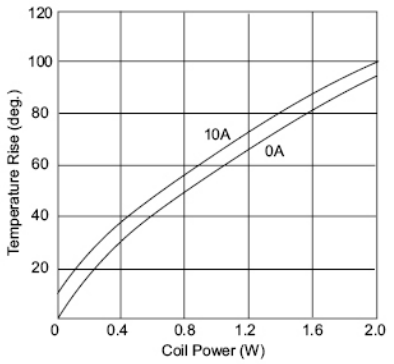

Operating Range

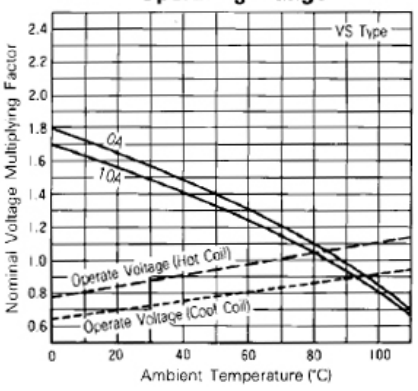

Operating Range

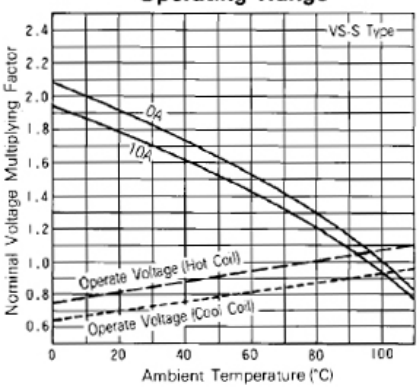

Downloaded from Arrow.com.

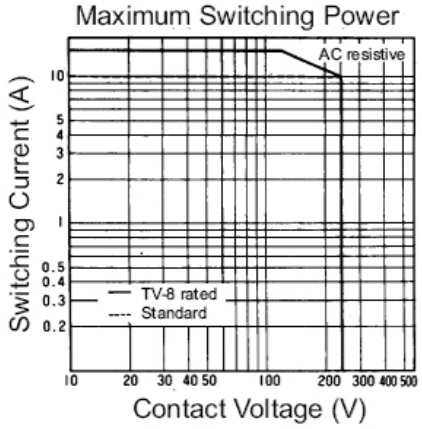

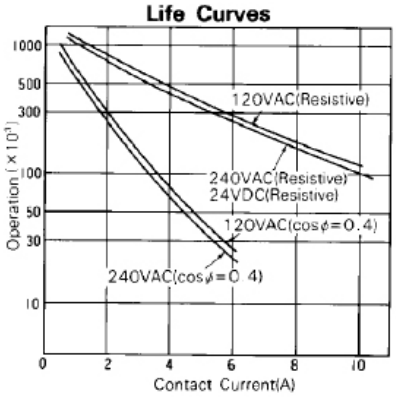

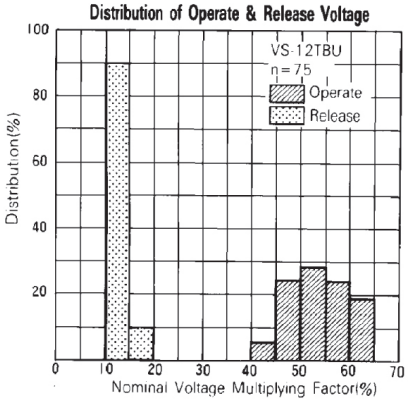

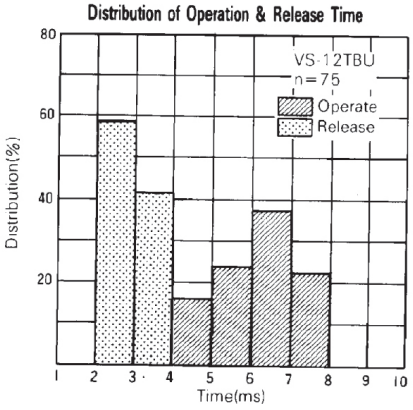

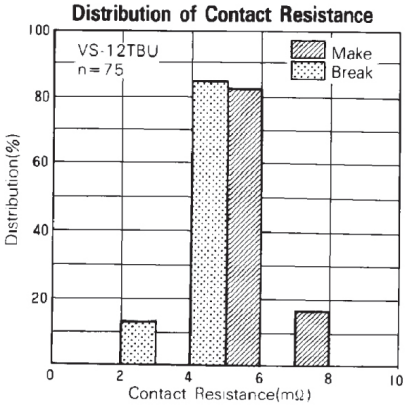

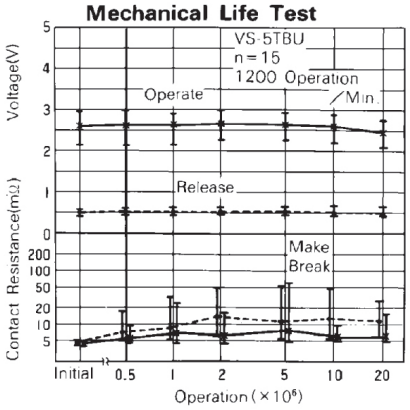

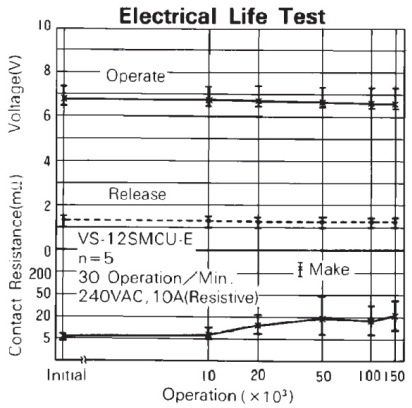

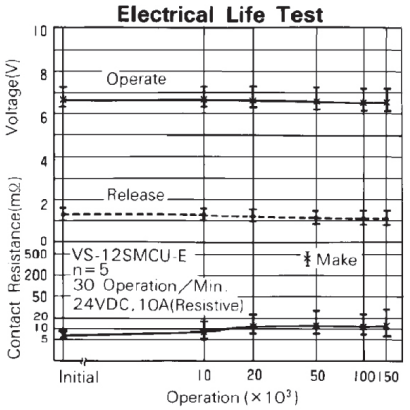

Downloaded from Arrow.com.

■ DIMENSIONS

- **Dimensions**

VS-MB type flux proof type

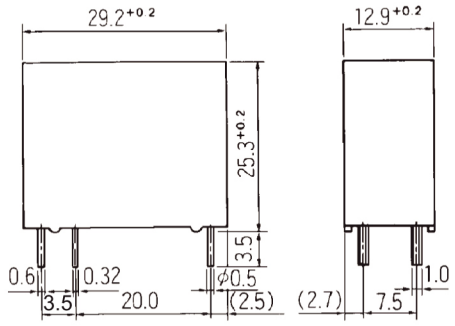

- **Schematics** (BOTTOM VIEW)

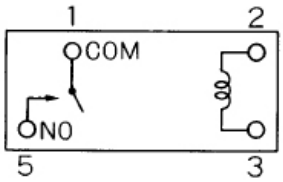

- **PC board mounting hole layout** (BOTTOM VIEW)

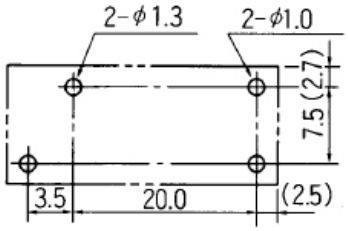

VS-MC type (plastic sealed type with tape)

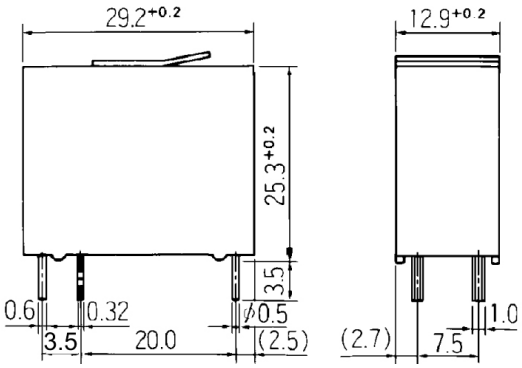

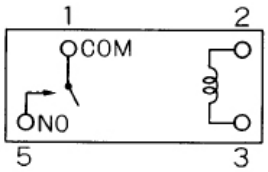

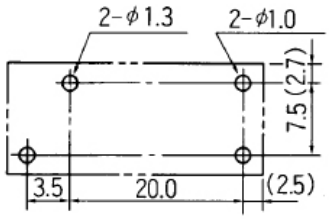

VS-MK type (Plastic sealed type)

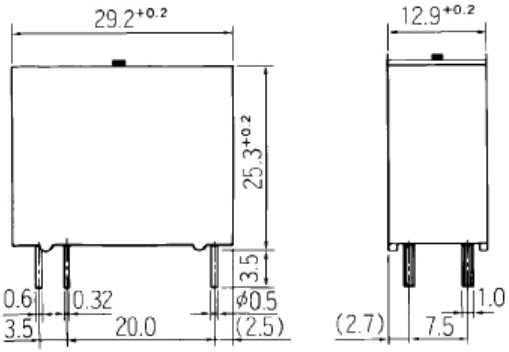

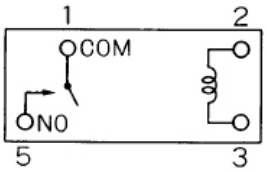

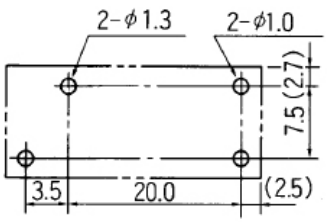

Unit: mm

Downloaded from Arrow.com.

- **Dimensions**

VS-TB type (Flux proof type)

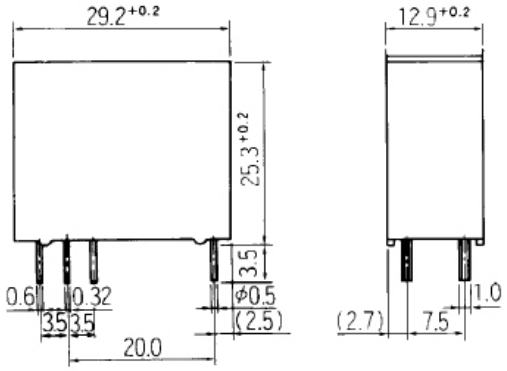

- **Schematics** (BOTTOM VIEW)

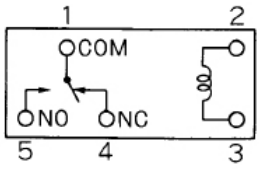

- **PC board mounting hole layout** (BOTTOM VIEW)

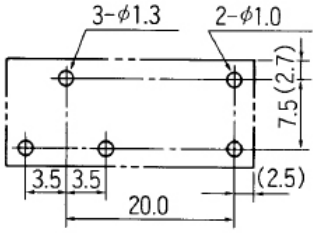

VS-TC type (Plastic sealed type with tape)

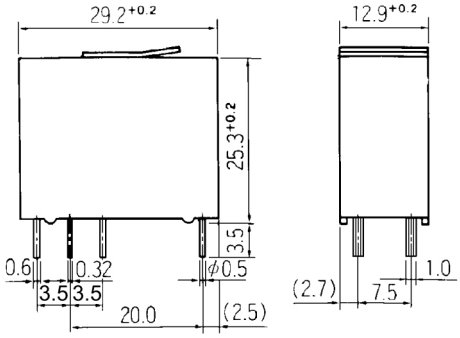

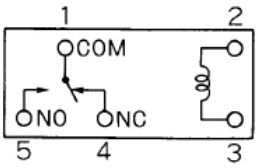

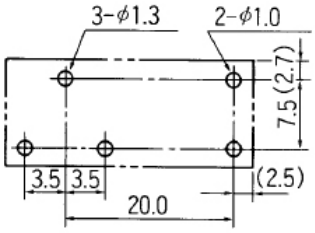

VS-TK type (Plastic sealed type)

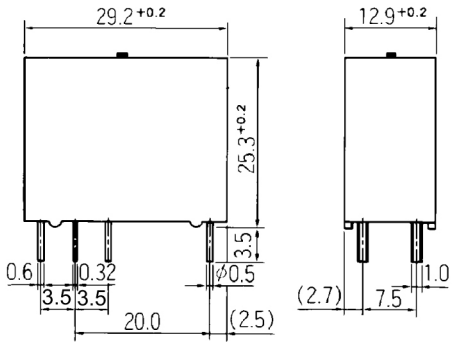

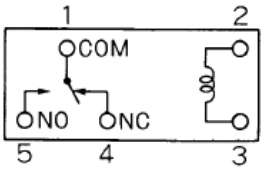

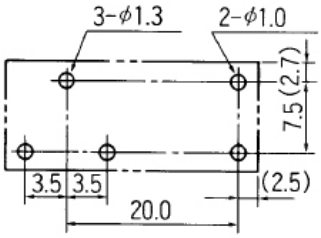

Unit: mm

Note: This datasheet provide only + tolerance for outer dimensions.

Downloaded from Arrow.com.

RoHS Compliance and Lead Free Information

1. General Information

- All relays produced by Fujitsu Components are compliant with RoHS directive 2011/65/EU including amendments.
- Cadmium as used in electrical contacts is exempted from the RoHS directives.
  As per Annex III of directive 2011/65/EU.
- All relays are lead-free. Please refer to Lead-Free Status Info for older date codes at:
  http://www.fujitsu.com/downloads/MICRO/fcai/relays/lead-free-letter.pdf
- Lead free solder plating on relay terminals is Sn-3.0Ag-0.5Cu, unless otherwise specified.
  This material has been verified to be compatible with PbSn assembly process.

2. Recommended Lead Free Solder Condition

- Recommended solder Sn-3.0Ag-0.5Cu.

Flow Solder Condition:

Pre-heating:	maximum 120˚C within 90 sec.
Soldering:	dip within 5 sec. at 255˚C ± 5˚C solder bath

Relay must be cooled by air immediately after soldering

Solder by Soldering Iron:

Soldering Iron	30-60W
Temperature:	maximum 350-360˚C
Duration:	maximum 3 sec.

We highly recommend that you confirm your actual solder conditions

3. Moisture Sensitivity

- Moisture Sensitivity Level standard is not applicable to electromechanical relays, unless otherwise indicated.

4. Tin Whiskers

- Dipped SnAgCu solder is known as presenting a low risk to tin whisker development. No considerable length whisker was found by our in house test.

Downloaded from Arrow.com.

Fujitsu Components International Headquarter Offices

Japan
Fujitsu Component Limited
Shinagawa Seaside Park Tower 19F,
12-4, Higashi-shinagawa 4-chome, Shinagawa-ku,
Tokyo,140-0002, Japan
Tel: (81-3) 3450-1681
Fax: (81-3) 3474-2385
Email: fcl-contact@cs.jp.fujitsu.com
Web: www.fcl.fujitsu.com

North and South America
Fujitsu Components America, Inc.
2290 North 1st Street, Suite 212
San Jose, CA 95131, USA
Tel: (1-408) 745-4900
Fax: (1-408) 745-4970
Email: components@us.fujitsu.com
Web: http://us.fujitsu.com/components

Europe
Fujitsu Components Europe B.V.
Diamantlaan 25
2132 WV Hoofddorp
Netherlands
Tel: (31-23) 5560910
Fax: (31-23) 5560950
Email: info@fceu.fujitsu.com
Web: emea.fujitsu.com/components/

Asia Pacific
Fujitsu Components Asia Ltd.
102E Pasir Panjang Road
#01-01 Citilink Warehouse Complex
Singapore 118529
Tel: (65) 6375-8560
Fax: (65) 6273-3021
Email: fcal@fcal.fujitsu.com
Web: http://www.fujitsu.com/sg/services/micro/components/

©2014 Fujitsu Components Europe B.V. All rights reserved. All trademarks or registered trademarks are the property of their respective owners.

The contents, data and information in this datasheet are provided by Fujitsu Component Ltd. as a service only to its user and only for general information purposes.
The use of the contents, data and information provided in this datasheet is at the users' own risk.
Fujitsu has assembled this datasheet with care and will endeavor to keep the contents, data and information correct, accurate, comprehensive, complete and up to date.
Fujitsu Components Europe B.V. and affiliated companies do however not accept any responsibility or liability on their behalf, nor on behalf of its employees, for any loss or damage, direct, indirect or consequential, with respect to this datasheet, its contents, data, and information and related graphics and the correctness, reliability, accuracy, comprehensiveness, usefulness, availability and completeness thereof.
Nor do Fujitsu Components Europe B.V. and affiliated companies accept on their behalf, nor on behalf of its employees, any responsibility or liability for any representation or warrant of any kind, express or implied, including warranties of any kind for merchantability or fitness for particular use, with respect to these datasheets, its contents, data, information and related graphics and the correctness, reliability, accuracy, comprehensiveness, usefulness, availability and completeness thereof. Rev. August 04, 2014

Downloaded from Arrow.com.