Positronic Industries

Standard Density
Rectangular Connectors

For Direct Current, Low Frequency Analog and Digital High Speed Data Applications

Catalog C-009 Rev. B

www.connectpositronic.com

Downloaded from Arrow.com.

Connector Excellence

POSITRONIC INDUSTRIES

About Us

Founded in 1966, Positronic Industries is a vertically integrated manufacturer of high quality interconnect products. Positronic has earned the worldwide reputation as a service oriented, quick-reaction, top quality connector supplier. We are committed to maintaining this reputation by continuous implementation of our **Complete Capability** concept.

Complete Capability

Machining

Design & Development

- Designs new connectors and modifies existing connectors to meet industry requirements
- Continuously conducts marketing studies to identify industry needs for new products
- Ongoing interest in unique connector designs

Tooling

- Tooling support for all manufacturing areas within company
- Provides 80% of new tooling, punch press dies, molds, jigs and fixtures used at Positronic factory locations worldwide

Machining

- Automatic screw machines produce finely crafted contacts and hardware for connector bodies
- Trained technicians operate machines from Tornos, Bechler and Brown & Sharpe

Molding

Molding

- Molds all plastic connector components such as insulators, hoods, angle brackets and more
- Overmold capability available

Plating

- Applies gold and other metal finishes to connector components to any required thickness
- Plating conforms to all military specifications

Quality Assurance Lab

- Quality assurance system certified to ISO 9001
- Maintains aggressive TQM program
- Able to test to IEC, EIA, UL, MIL-DTL-24308, MIL-DTL-28748, MIL-C-39029 and MIL-C-85049 requirements

Finished Stock Inventory

Finished Stock Inventory

- Each main factory location maintains a large inventory of connector components and accessories
- Same day shipments available on many standard connector products
- Stocking agreements available for qualified customers

Worldwide Sales & Service

- Responsive attitude toward customer needs
- Fully trained sales staff located worldwide

Products described within this catalog may be protected by one or more of the following US. patents:

#4,721,472 #4,900,261 #5,255,580 #5,329,697 #6,260,268

Patented in Canada, 1992 **Other Patents Pending**

Unless otherwise specified, **dimensional tolerances** are:

1] ±0.001 inches [0.03 mm] for male contact mating diameters.
2] ±0.003 inches [0.08 mm] for contact termination diameters.
3] ±0.005 inches [0.13 mm] for all other diameters.
4] ±0.015 inches [0.38 mm] for all other dimensions.

Positronic Industries believes the data contained herein to be reliable. Since the technical information is given free of charge, the User employs such information at his own discretion and risk. Positronic Industries assumes no responsibility for results obtained or damages incurred from use of such information in whole or in part.

Positronic Industries' FEDERAL SUPPLY CODE [Cage Code] FOR MANUFACTURERS is 28198

Downloaded from Arrow.com.

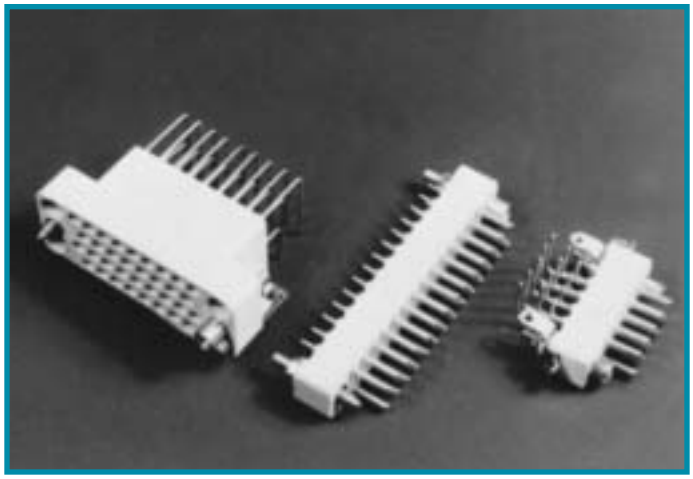

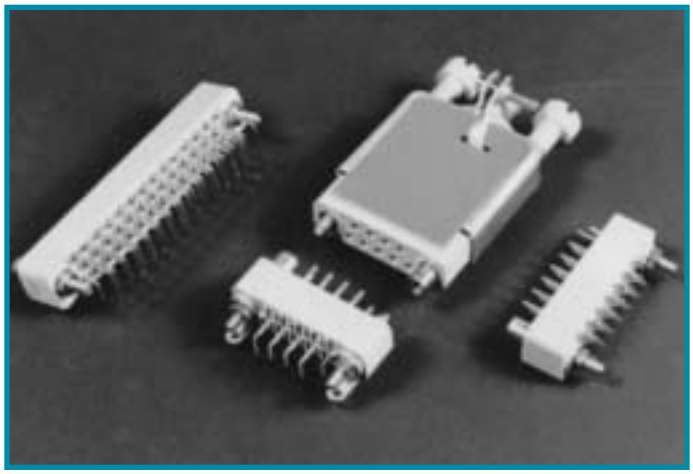

CONNECTOR DESCRIPTIONS

GMCT SERIES CONNECTORS

Heavy duty, rectangular connectors with removable contacts. Multipurpose connectors offering power, signal and shielded contacts. Twelve connector variants, nine through 104 poles, qualified to MIL-DTL-28748.

GMCT SERIES CONTACTS

Size 16 contacts, 13 ampere nominal rated, and size 20 contacts, 7.5 ampere nominal rated, qualified to MIL-C-39029. Terminations are crimp 14 AWG [2.5mm^2] through 32 AWG [0.03mm^2], solder cup, wrap post, printed board, press-fit and shielded.

GAP SERIES CONNECTORS

Heavy duty, rectangular, printed board connectors with straight solder, size 16 contacts, 7.5 ampere nominal rated. Eight connector variants, nine through 50 poles.

GAPL SERIES CONNECTORS

Heavy duty, rectangular, printed board mount connectors with size 16, right angle solder cup contacts, 7.5 ampere nominal rated. Seven connector variants, nine through 50 poles.

VMCT AND VAPL SERIES CONNECTORS

Heavy duty, rectangular, CCITT V.35 recommended interface connectors with size 16 contacts, 13 ampere nominal rated. Terminations are crimp, solder cup, right angle printed board mount and press-fit.

GM SERIES CONNECTORS

Rectangular connectors with size 20 fixed solder contacts, 7.5 ampere nominal rated. Solder cup and printed board terminations. Eleven connector variants, seven through 50 poles. Qualified to MIL-DTL-28748.

Downloaded from Arrow.com.

Positronic Industries, Inc.
www.connectpositronic.com

TABLE OF CONTENTS

Heavy-Duty
Rectangular

G M C T S E R I E S

TECHNICAL CHARACTERISTICS 1
TYPICAL MATING ASSEMBLIES 2
EXPLODED VIEWS OF TYPICAL MATED CONNECTOR ASSEMBLIES 3
CONNECTOR COMPONENT DESCRIPTION AND TERMINOLOGY 4
INSULATOR DIMENSIONS 5-6
CONTACT HOLE POSITION DIMENSIONS AND PRINTED BOARD HOLE PATTERN 7-8
LARGE SURFACE AREA CONTACT MATING SYSTEM 9
CURRENT-TEMPERATURE DERATING CURVE AND TEMPERATURE RISE CURVE 10
CRIMP CONTACTS AND REELS FOR FEEDING AUTO-CRIMPING TOOLS 11
SOLDER CUP CONTACTS 12
MILITARY CRIMP CONTACTS AND COMPLIANT TERMINATION PRESS-FIT CONTACTS 13
STRAIGHT SOLDER CONTACTS AND WRAP POST CONTACTS 14
CRIMP SHIELDED CONTACTS AND TECHNICAL CHARACTERISTICS 15
CRIMPING INFORMATION AND CRIMPING INSTALLATION TOOLS 16-19
REMOVABLE CONTACT ORDERING ASSISTANCE CHART 20
ORDERING INFORMATION 21

G A P S E R I E S

TECHNICAL CHARACTERISTICS 22
STRAIGHT SOLDER CONTACTS 23
CONTACT HOLE POSITION DIMENSIONS AND PRINTED BOARD HOLE PATTERN 24
ORDERING INFORMATION 25

G A P L S E R I E S

TECHNICAL CHARACTERISTICS 26
RIGHT ANGLE PRINTED BOARD MOUNT CONNECTORS 27
MALE RIGHT ANGLE PRINTED BOARD HOLE PATTERN 28
FEMALE RIGHT ANGLE PRINTED BOARD HOLE PATTERN 29
MOUNTING BRACKET AND PUSH-ON FASTENER
FOR RIVETED ON RIGHT ANGLE MOUNTING BRACKETS 30
ORDERING INFORMATION 31

Downloaded from Arrow.com.

V. 35 SERIES

V.35 SERIES TECHNICAL CHARACTERISTICS 32

VAPL SERIES TECHNICAL CHARACTERISTICS AND
VMCT/VAPL SERIES TYPICAL CONNECTOR MATING ASSEMBLY 33

VMCT SERIES INSULATOR DIMENSIONS AND
VAPL SERIES RIGHT ANGLE PRINTED BOARD HOLE PATTERN 34

VMCT SERIES ORDERING INFORMATION 36

VAPL SERIES ORDERING INFORMATION 37

GM SERIES

TECHNICAL CHARACTERISTICS 38

SOLDER CUP CONTACTS, STRAIGHT SOLDER CONTACTS FOR
PRINTED BOARD MOUNT, AND TYPICAL MATING ASSEMBLY 39

INSULATOR DIMENSIONS 40

CONTACT HOLE POSITION DIMENSIONS AND PRINTED BOARD HOLE PATTERN 41-42

ORDERING INFORMATION 43

ACCESSORIES

VIBRATION LOCKS, TYPICAL MATING ASSEMBLY, AND
FLUSH PANEL CONNECTOR MOUNTING BRACKETS 44

JACKSCREW SYSTEM DIMENSIONS AND POLARIZING GUIDE DIMENSIONS 45

POLARIZING GUIDES 46

FIXED AND TURNABLE JACKSCREW SYSTEM 47-48

POLARIZATION OF MALE AND FEMALE SHELLS AND DIMENSION FOR FEMALE SHELLS 49

DIMENSIONS FOR MALE SHELLS 50

DIMENSIONS FOR MOUNTING PLATES 51

CABLE ADAPTERS DIMENSIONS FOR TOP OPENING HOODS 52

CABLE ADAPTERS DIMENSIONS FOR SIDE OPENING HOODS 53

CABLE ADAPTERS DIMENSIONS FOR TOP OPENING HOODS WITH JACKSCREW SYSTEM 54

CABLE ADAPTERS DIMENSIONS FOR SIDE OPENING HOODS WITH JACKSCREW SYSTEM 55

CABLE ADAPTERS DIMENSIONS FOR SIDE ACCESS HOODS WITH JACKSCREW SYSTEM 56

EMI/RFI SHIELDED HOOD AND TOP OPENING HOODS WITH JACKSCREW
SYSTEM AND PLASTIC CABLE CLAMPS 57

PANEL CUT-OUT DIMENSIONS FOR GM SERIES AND GMCT SERIES CONNECTORS 58

GROUNDING PLATES

GROUNDING PLATES 59-62

Q. P. L. LISTING

ORDERING INFORMATION FOR MIL-DTL-28748/3 AND MIL-DTL-28748/4 63-64

MIL-DTL-28748 & MIL-C-39029 QUALIFIED PRODUCTS LISTING 65

Downloaded from Arrow.com.

Positronic Industries, Inc.
www.connectpositronic.com

HEAVY-DUTY RECTANGULAR CONNECTORS WITH REMOVABLE CONTACTS

Heavy-Duty Rectangular

Size 16 and 20 Contacts

Connectors Qualified to MIL-DTL-28748

Contacts Qualified to MIL-C-39029

IEC Publication 807-7

U.L. Recognized, File #E49351

Telecommunication U.L. File #E140980

GMCT Series connectors are heavy-duty, multi-pole, high reliability connectors qualified to MIL-DTL-28748 specifications. Termination styles are crimp, solder cup, straight solder, wrap post, press-fit, and crimp shielded. According to contact size selected, GMCT Series connectors are intermateable with Positronic GAP and GAPL series connectors.

Twelve contact variants, 9 through 104 poles, are offered. Contacts can have 0.062 inch [1.57mm] diameters, rated to 13 amperes per contact, or have 0.040 inch [1.02mm] diameters, rated to 7.5 amperes per contact. GMCT Series crimp contacts are qualified to MIL-C-39029.

A wide array of mounting, locking, shrouding and polarizing accessories is available for this series. For details, see the Heavy-Duty Rectangular Connector Accessories section.

Due to its many termination styles, its wide range of contact variants, and an array of cable support accessories, GMCT Series connectors are widely utilized in navigational systems, robotics, mainframe and peripheral computers, medical equipment, telecommunications, instrumentation and process control applications.

GMCT SERIES TECHNICAL CHARACTERISTICS

MILITARY SPECIFICATIONS:

Qualified to MIL-DTL-28748/3 and MIL-DTL-28748/4. Contacts qualified to MIL-C-39029/34 and MIL-C-39029/35.

UNDERWRITERS LABORATORY RECOGNIZED:

File No. E49351.

INTERNATIONAL STANDARDS:

IEC 807-7.
U.L. Recognized.

MATERIALS AND FINISHES:

Insulator: Glass filled DAP per ASTM-D-5948 type SDG-F. Grey color is standard, black available.

Removable Contacts: Gold flash over nickel. Military contacts plated 0.000050 inch [1.27 microns] gold over copper. Other finishes available upon request.

Hoods, Cable Adapters: Aluminum with yellow or black anodize.

Shells: Aluminum with yellow or black anodize.

Jackscrew System: Passivated stainless steel.

Polarizing Guides: Copper alloy with nickel plate or passivated stainless steel.

Vibration Locks: Copper alloy with zinc plate and dichromate seal.

MECHANICAL CHARACTERISTICS:

Removable Contacts: Insert contact to rear face of insulator, release from front face of insulator. Both size 16 [13 amps] and size 20 [7.5 amps] contacts available. Female contact has “closed entry” design for highest reliability.

Contact Retention in Insulator: 20 lbs. [89N] after 10 cycles of contact insertion/extraction.

Contact Termination: Crimp all wire sizes from 14 AWG [2.5 mm^2] through 32 AWG [0.03 mm^2]. Also, solder cup, press-fit, wrap post and solder printed board terminations. Also, crimp and shielded contacts.

Locking Systems: Friction, vibration locks and jackscrews.

Polarization: Polarized guides, polarized shells and jackscrew system.

Mechanical Operations: 1000 operations per IEC 512-5.

Jackscrews: Standard threads, 6-32 UNC on all sizes, except 104 connector variant, which uses 8-32 UNC. Metric threads, M3X0.5 available.

ELECTRICAL CHARACTERISTICS:

Contact Current Rating (maximum): Size 16: 0.062 inch [1.57 mm] diameter. - 13 amps maximum.
Size 20: 0.040 inch [1.02 mm] diameter. - 7.5 amps maximum.

Initial Contact Resistance: Size 16 – 0.003 ohms.
Size 20 – 0.007 ohms.

Flash over Voltage: 2700 V.AC [rms].

Test Voltage: Size 16 - 2000 V.AC [rms].
Size 20 - 1200 V.AC [rms].

Insulation Resistance (minimum): 5 G ohms.

Clearance and Creepage Distance (minimum): 0.080 inch [2.03 mm].

Working Temperature: -65°C to 150°C.

Working Voltage: 500 V.AC [rms].

Coaxial Contacts:
Characteristic Impedance: 50 ohms.
Initial Contact Resistance: 0.012 ohms max.

Downloaded from Arrow.com.

HEAVY-DUTY RECTANGULAR CONNECTORS WITH REMOVABLE CONTACTS

TYPICAL MATING ASSEMBLIES

PICTURES ARE 80% OF ACTUAL SIZE

GMCT26F0E100JB

GAP26MDS4T0000

GMCT34F00RAZ0

GMCT34M0TWA00

CONNECTOR MATING DIMENSIONS

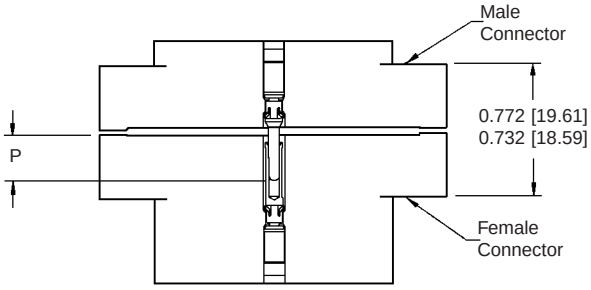

INSULATORS

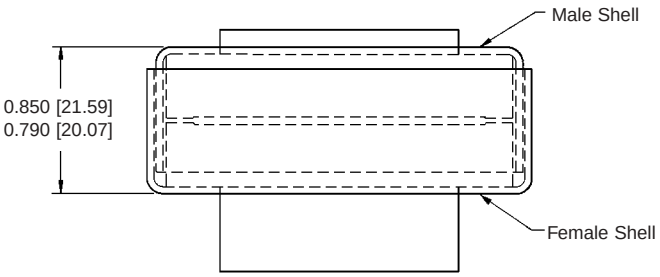

PROTECTIVE SHELLS

P: 0.276 [7.01] MINIMUM PENETRATION OF MALE CONTACT IN "CLOSED ENTRY" DESIGN FEMALE CONTACT TO ENSURE MINIMUM CONTACT RESISTANCE.

**DIMENSIONS ARE IN INCHES [MILLIMETERS].
ALL DIMENSIONS ARE SUBJECT TO CHANGE.**

Downloaded from Arrow.com.

Positronic Industries, Inc.
www.connectpositronic.com

HEAVY-DUTY RECTANGULAR CONNECTORS WITH REMOVABLE CONTACTS

EXPLODED VIEWS OF TYPICAL MATED CONNECTOR ASSEMBLIES

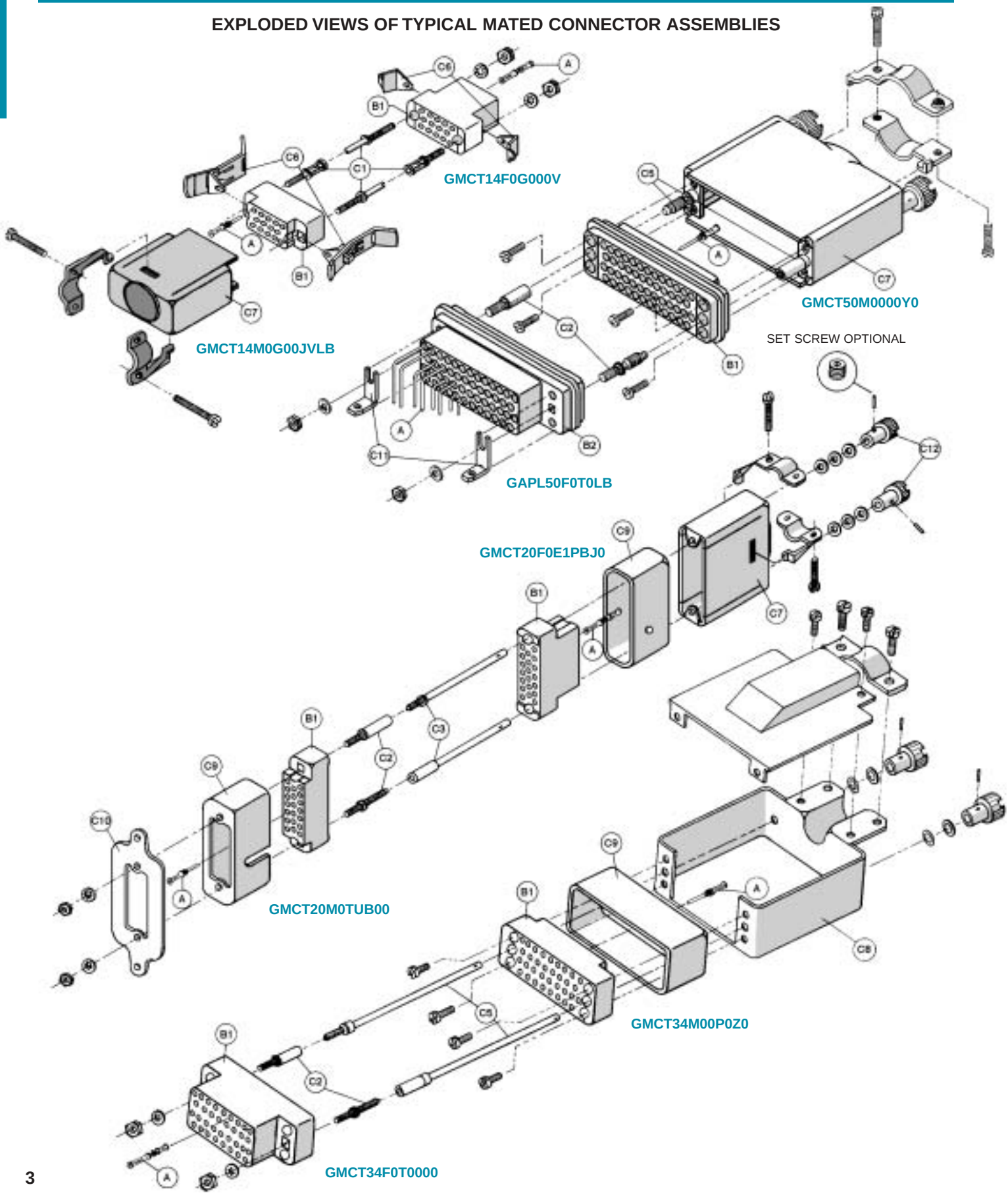

Downloaded from Arrow.com.

CONNECTOR COMPONENT DESCRIPTION AND TERMINOLOGY

A — Male and female contacts, size 16 and size 20. Power, signal and shielded. Terminations are crimp, solder cup, wrap post, printed board straight solder and press-fit.

B1 — Unloaded connector insulators, male and female. Insulator retention system retains all contact termination types. Insulator may be used as a free or fixed connector.

B2 — Loaded connector insulators, male and female. Insulators may be preloaded per customer requirements with contacts having terminations of 90° or straight solder printed board mount, wrap post and press-fit. Insulator contact positions may be selectively loaded with contacts. Unloaded insulator contact positions remain unloaded and reserved for future use. Connectors are normally fixed panel or printed board connectors.

C1 — Polarizing guides, male and female, ensure correct alignment and coupling of male and female connectors. They may also be used for keying when used in corner positions of connector variants 34, 42, 50, 66, 75 and 104 poles.

C2 — Fixed jackscrews are the stationary threaded members of the jackscrew system. Threaded pilots and sockets of the jackscrew system also provide connector polarization to ensure correct connector coupling.

C3 — Long turnable jackscrews, the rotating threaded members of the jackscrew system, are used with a free connector having a hood for cable support. Used on connector variants 9, 14, 18, 20, 21, 26 and 41 poles. Knobs, C-12, may be affixed to turnable jackscrews using either roll pins or set screws.

C4 — Short turnable jackscrews are used to polarize and mechanically assist with the coupling of the male and female connectors when the free connector is not equipped with a hood.

C5 — Long turnable jackscrews, factory assembled to hood (cable adapter) for polarization and mechanical assistance in the coupling of the free connector to the fixed connector. Used on connector variants with 34, 42, 50, 66, 75 and 104 poles.

C6 — Vibration locking system consists of lock tabs on fixed connector and locking levers on free cable connectors. Normally used on connector variants 7, 9, 14, 18, 20, 21 and 26 poles. Locks connectors in coupled position.

C7 — Hoods (cable adapters) are used on the free connector to provide cable support and contact protection. May also mechanically support either the turnable or fixed members of the jackscrew system.

C8 — Side access hoods (cable adapters). Extra strength, quick cable assembly to connector, fixed or free, to provide cable support and relieve stress on contact termination. Supplied with both turnable and fixed jackscrew systems.

C9 — Shells (shrouds), both male and female, protect male and female contacts from damage. Also used to provide additional polarization combinations.

C10 — Mounting plates, with or without float bushings, provide a stronger mechanical method of mounting the fixed connector to a panel. May be used with shells.

C11 — Mounting angle brackets provide a means of mechanically affixing the fixed connector to the printed board.

C12 — Knobs of turnable jackscrews may be affixed to the jackscrews by using either the roll pin or set screw method. Specify method desired in step 9 of order numbering system.

Downloaded from Arrow.com.

Positronic Industries, Inc.
www.connectpositronic.com

HEAVY-DUTY RECTANGULAR CONNECTORS WITH REMOVABLE CONTACTS

Heavy-Duty Rectangular

INSULATOR DIMENSIONS

MATING FACE OF FEMALE CONNECTOR OR REAR FACE OF MALE CONNECTOR

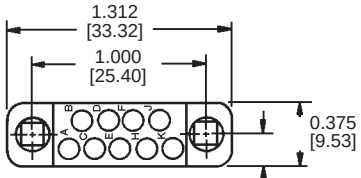

GMCT 9

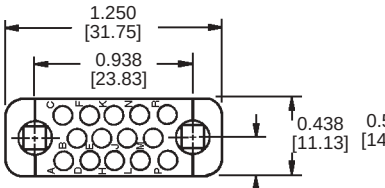

GMCT 14

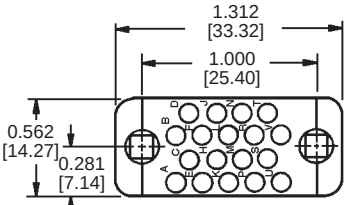

GMCT 18

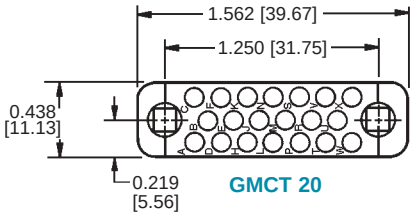

GMCT 20

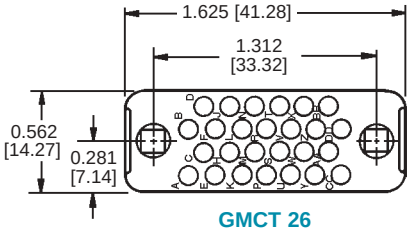

GMCT 26

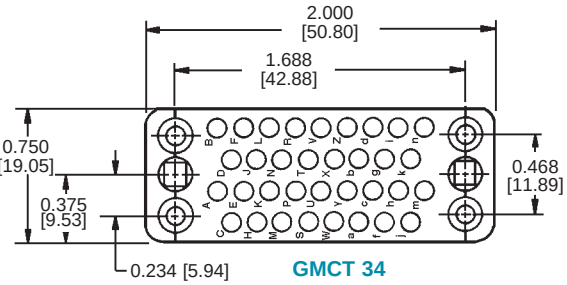

GMCT 34

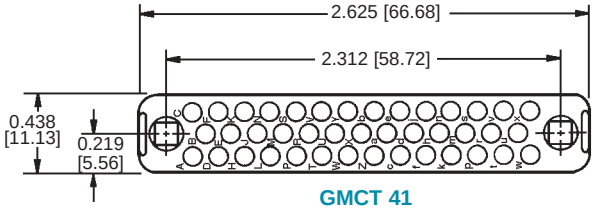

GMCT 41

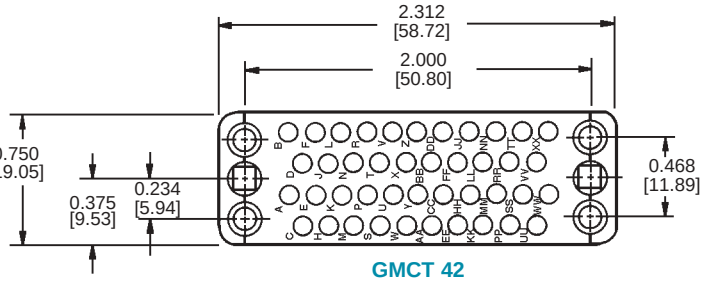

GMCT 42

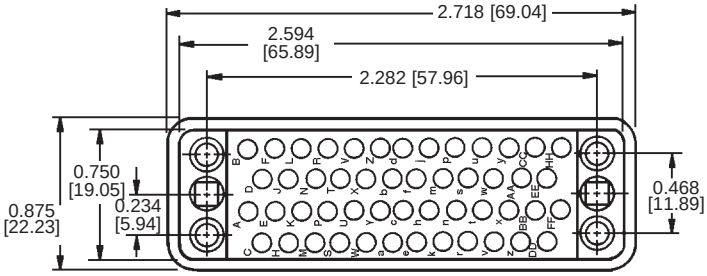

GMCT 50

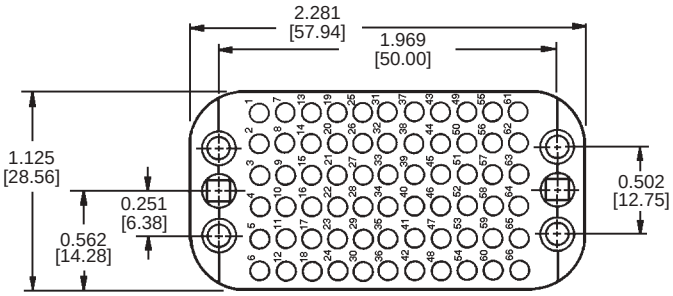

GMCT 66

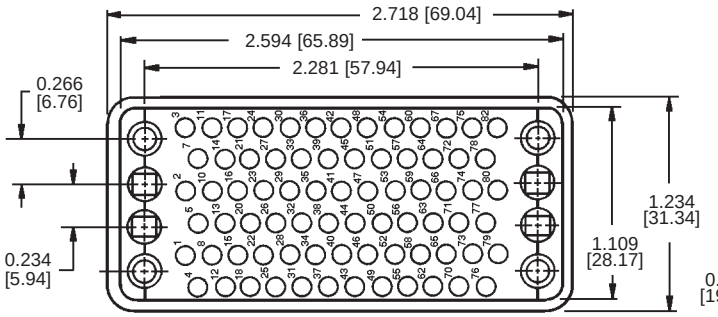

GMCT 75

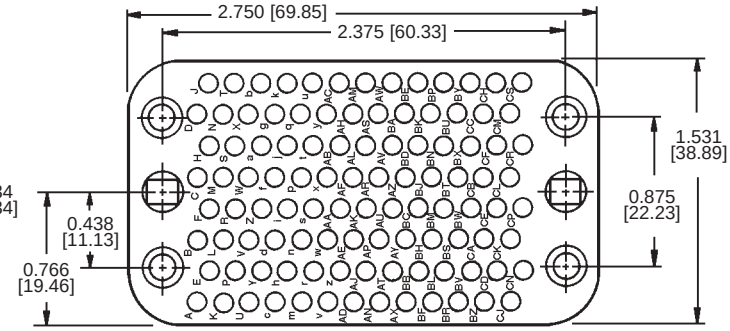

GMCT 104

MATERIAL: GLASS FILLED DIALLYL PHTHALATE PER ASTM-D-5948 TYPE SDG-F

SEE GMCT SERIES PRINTED BOARD HOLE PATTERN PAGE FOR CONNECTOR VARIANT CONTACT HOLE POSITIONS

DIMENSIONS ARE IN INCHES [MILLIMETERS].
ALL DIMENSIONS ARE SUBJECT TO CHANGE.

Downloaded from Arrow.com.

HEAVY-DUTY RECTANGULAR CONNECTORS WITH REMOVABLE CONTACTS

INSULATOR DIMENSIONS

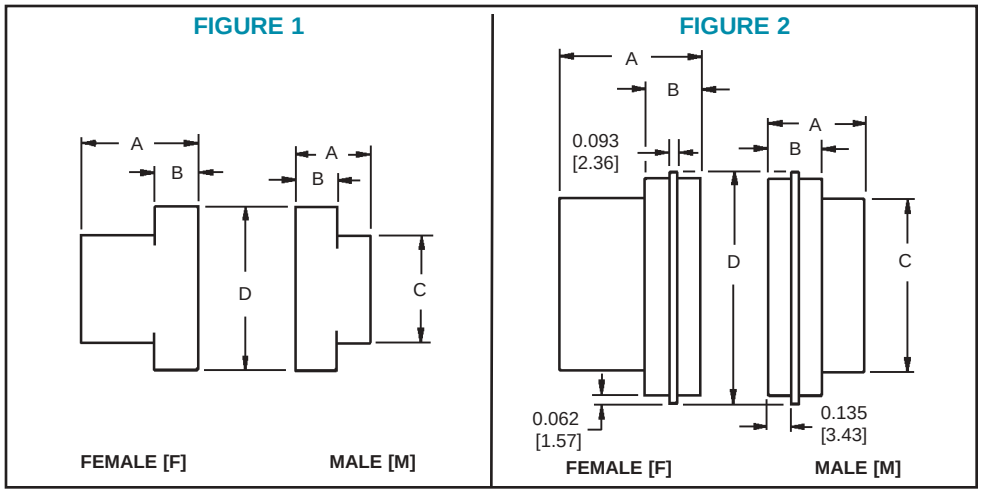

CATALOG NUMBER	FIGURE	A	B	C	D
GMCT9F	1	0.856 [21.74]	0.370 [9.40]	0.810 [20.57]	1.312 [33.32]
GMCT9M	1	0.511 [12.98]	0.370 [9.40]	0.810 [20.57]	1.312 [33.32]
GMCT14F	1	0.856 [21.74]	0.370 [9.40]	0.778 [19.76]	1.250 [31.75]
GMCT14M	1	0.511 [12.98]	0.370 [9.40]	0.778 [19.76]	1.250 [31.75]
GMCT18F	1	0.856 [21.74]	0.370 [9.40]	0.772 [19.61]	1.312 [33.32]
GMCT18M	1	0.511 [12.98]	0.370 [9.40]	0.772 [19.61]	1.312 [33.32]
GMCT20F	1	0.856 [21.74]	0.370 [9.40]	1.072 [27.23]	1.562 [39.67]
GMCT20M	1	0.511 [12.98]	0.370 [9.40]	1.072 [27.23]	1.562 [39.67]
GMCT26F	1	0.856 [21.74]	0.370 [9.40]	1.072 [27.23]	1.625 [41.28]
GMCT26M	1	0.511 [12.98]	0.370 [9.40]	1.072 [27.23]	1.625 [41.28]
GMCT34F	1	0.856 [21.74]	0.370 [9.40]	1.375 [34.93]	2.000 [50.80]
GMCT34M	1	0.511 [12.98]	0.370 [9.40]	1.375 [34.93]	2.000 [50.80]
GMCT41F	1	0.856 [21.74]	0.370 [9.40]	2.125 [53.98]	2.625 [66.68]
GMCT41M	1	0.511 [12.98]	0.370 [9.40]	2.125 [53.98]	2.625 [66.68]
GMCT42F	1	0.866 [22.00]	0.370 [9.40]	1.672 [42.47]	2.312 [58.72]
GMCT42M	1	0.525 [13.34]	0.370 [9.40]	1.672 [42.47]	2.312 [58.72]
GMCT50F	2	0.856 [21.74]	0.370 [9.40]	1.972 [50.09]	2.718 [69.04]
GMCT50M	2	0.511 [12.98]	0.370 [9.40]	1.972 [50.09]	2.718 [69.04]
GMCT66F	1	0.856 [21.74]	0.370 [9.40]	1.673 [42.49]	2.281 [57.94]
GMCT66M	1	0.525 [13.34]	0.370 [9.40]	1.673 [42.49]	2.281 [57.94]
GMCT75F	2	0.856 [21.74]	0.370 [9.40]	1.980 [50.29]	2.718 [69.04]
GMCT75M	2	0.511 [12.98]	0.370 [9.40]	1.980 [50.29]	2.718 [69.04]
GMCT104F	1	0.856 [21.74]	0.370 [9.40]	2.048 [52.02]	2.750 [69.85]
GMCT104M	1	0.511 [12.98]	0.370 [9.40]	2.048 [52.02]	2.750 [69.85]

MATERIAL: GLASS FILLED DIALLYL PHTHALATE PER ASTM-D-5948 TYPE SDG-F

DIMENSIONS ARE IN INCHES [MILLIMETERS].
ALL DIMENSIONS ARE SUBJECT TO CHANGE.

Downloaded from Arrow.com.

CONTACT HOLE POSITION DIMENSIONS AND PRINTED BOARD HOLE PATTERN

FOR STRAIGHT SOLDER CONTACTS AND COMPLIANT TERMINATION PRESS-FIT CONTACTS MATING FACE OF FEMALE CONNECTOR OR REAR FACE OF MALE CONNECTOR

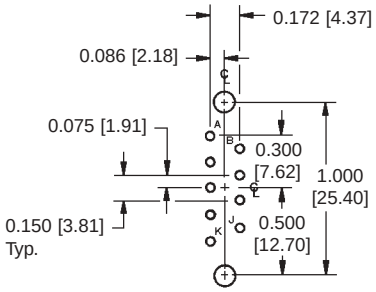

SIZE 9

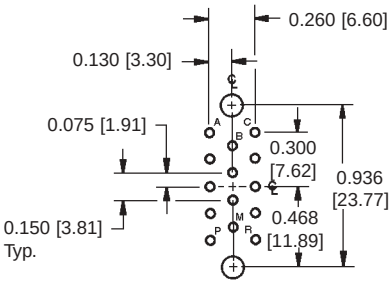

SIZE 14

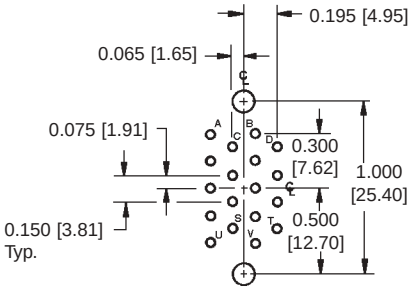

SIZE 18

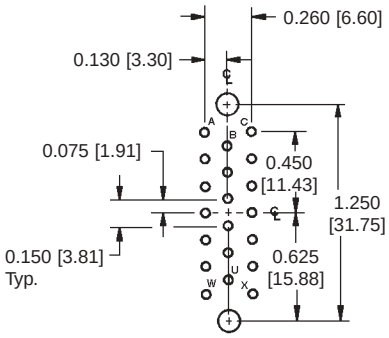

SIZE 20

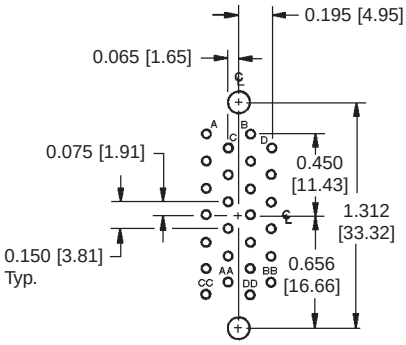

SIZE 26

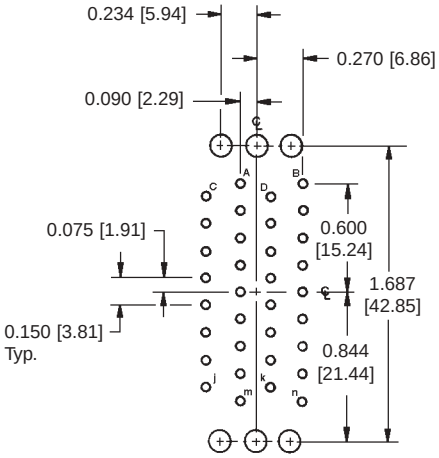

SIZE 34

SUGGEST 0.120 [3.05] Ø HOLES IN PRINTED BOARD FOR CONNECTOR MOUNTING HOLES

SUGGEST 0.040 [1.02] Ø HOLES IN PRINTED BOARD FOR GMCT SERIES STRAIGHT SOLDER CONTACTS

SUGGEST 0.069 [1.75] ±0.001 [0.03] Ø HOLE PLATED TO 0.063 [1.60] ±0.0035 [0.069] Ø HOLE FOR COMPLIANT TERMINATION PRESS-FIT CONTACTS

HOLE IDENTIFICATION FOR REFERENCE ONLY

**DIMENSIONS ARE IN INCHES [MILLIMETERS].
ALL DIMENSIONS ARE SUBJECT TO CHANGE.**

Downloaded from Arrow.com.

CONTACT HOLE POSITION DIMENSIONS AND PRINTED BOARD HOLE PATTERN

FOR STRAIGHT SOLDER CONTACTS AND COMPLIANT TERMINATION PRESS-FIT CONTACTS MATING FACE OF FEMALE CONNECTOR OR REAR FACE OF MALE CONNECTOR

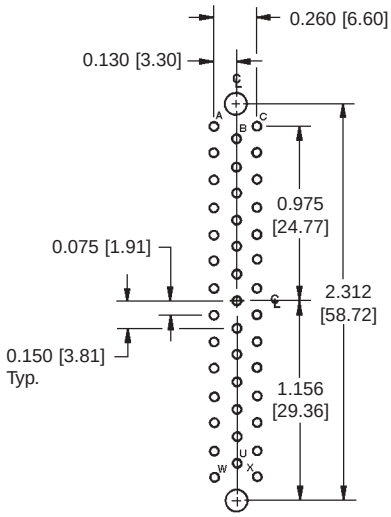

SIZE 41

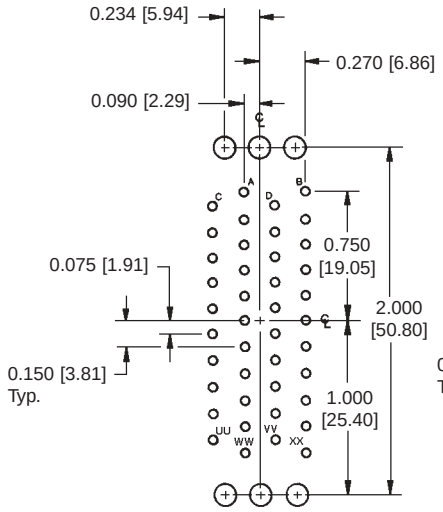

SIZE 42

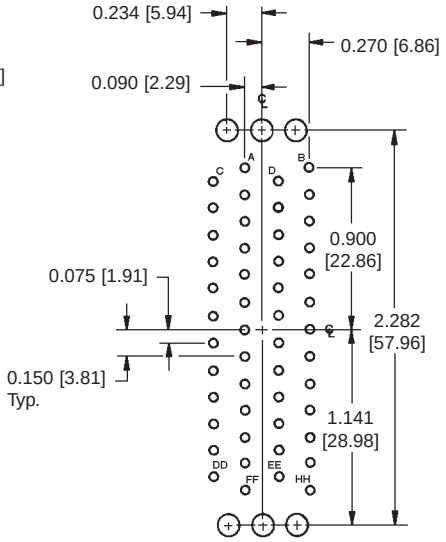

SIZE 50

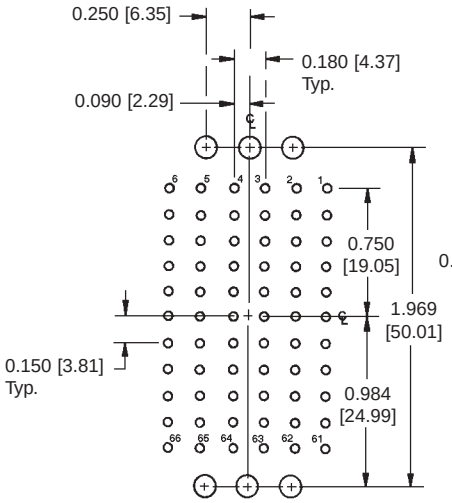

SIZE 66

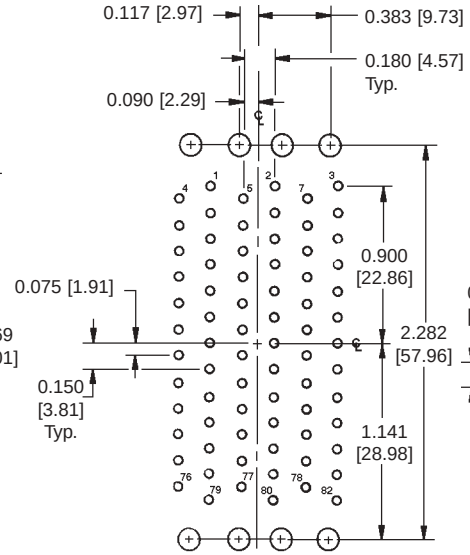

SIZE 75

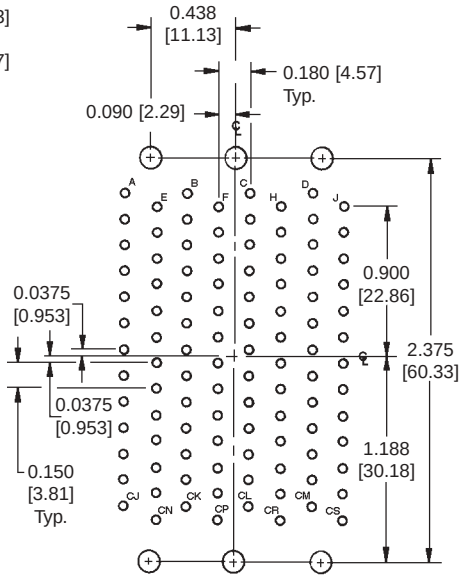

SIZE 104

HOLE IDENTIFICATION FOR REFERENCE ONLY

SUGGEST 0.120 [3.05] Ø HOLES IN PRINTED BOARD FOR CONNECTOR MOUNTING HOLES

SUGGEST 0.040 [1.02] Ø HOLES IN PRINTED BOARD FOR GMCT SERIES STRAIGHT SOLDER CONTACTS

SUGGEST 0.069 [1.75] ±0.001 [0.03] Ø HOLE PLATED TO 0.063 [1.60] ±0.0035 [0.069] Ø HOLE FOR COMPLIANT TERMINATION PRESS-FIT CONTACTS

**DIMENSIONS ARE IN INCHES [MILLIMETERS].
ALL DIMENSIONS ARE SUBJECT TO CHANGE.**

Downloaded from Arrow.com.

Positronic Industries, Inc.
www.connectpositronic.com

HEAVY-DUTY RECTANGULAR CONNECTORS WITH REMOVABLE CONTACTS

Heavy-Duty Rectangular

"LARGE SURFACE AREA CONTACT MATING SYSTEM"
HIGH RELIABILITY "CLOSED ENTRY" DESIGN

PRECISION MACHINED, SOLID COPPER ALLOY

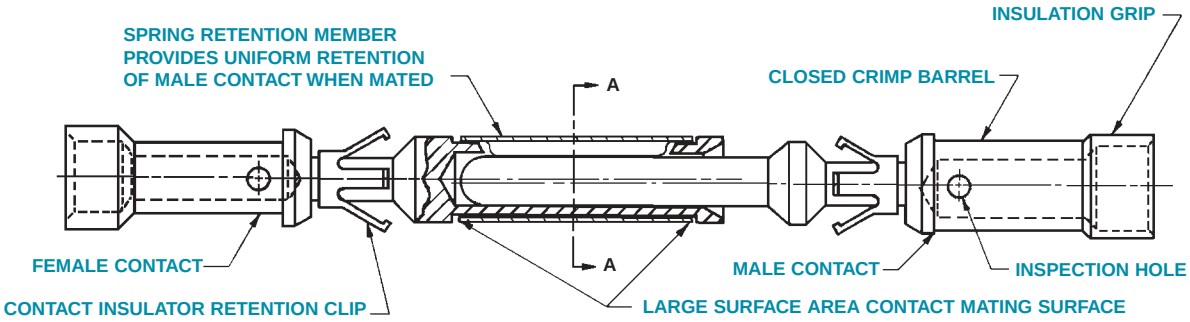

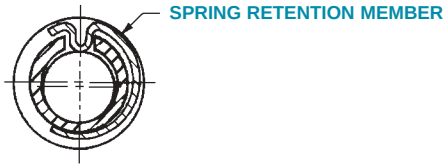

SECTION A-A ENLARGED

All contacts of the GMCT series connector family utilize the "Large Surface Area (L.S.A.) Contact Mating System." The "L.S.A. Contact Mating System" insures the lowest level of contact resistance during mechanical endurance tests of 1000 coupling cycles or more. Contact insertion/withdrawal forces remain substantially the same during the life of the connector.

The GMCT series uses only "Closed Entry" design female contacts. The "Closed Entry" design prevents probe damage to the female contacts, and will not allow the female contact to accept misaligned or bent male contacts.

All GMCT series contacts are precision machined from solid, copper alloy barstock. They are durable, smooth in construction, and have greater amperage capacities than hollow, sheet metal style contacts. This is graphically illustrated by the amperage-temperature rise curves developed for the 34 pole GMCT insulator using 16 AWG [1.5 mm^2] wire [see diagram pg. 10]. The precision machined, removable contact also has a more durable insulator retention system than the hollow, sheet metal style contact. After ten removal cycles from its insulator, the precision machined contact will withstand axial forces in excess of 20 lbs. [89N]. In comparison, the hollow, sheet metal style contact is limited to 10 lbs. [44.5N] after ten removal cycles from its insulator retention system.

**DIMENSIONS ARE IN INCHES [MILLIMETERS].
ALL DIMENSIONS ARE SUBJECT TO CHANGE.**

Downloaded from Arrow.com.

CURRENT-TEMPERATURE DERATING CURVE

(TESTED PER IEC PUBLICATION 512-3, TEST 5b)

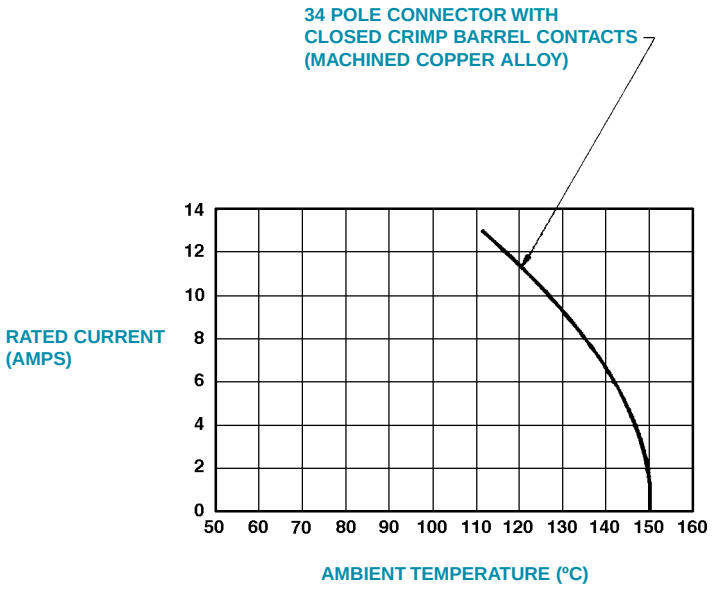

CURVE DEVELOPED USING SIZE 16 CONTACT WITH 16 AWG (1.5 mm^2) SIZE WIRE

TEMPERATURE RISE CURVE

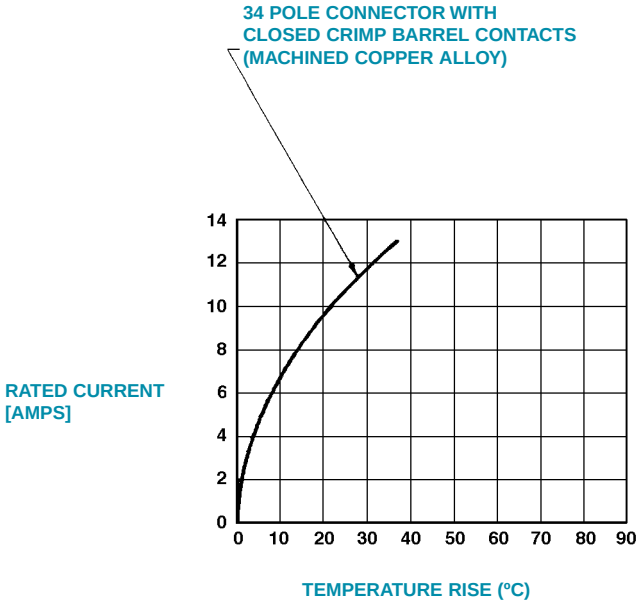

Downloaded from Arrow.com.

Positronic Industries, Inc.
www.connectpositronic.com

HEAVY-DUTY RECTANGULAR CONNECTORS WITH REMOVABLE CONTACTS

CRIMP CONTACTS

CLOSED CRIMP BARREL WITH INSULATION GRIP (SUPPORT)
PRECISION MACHINED, SOLID COPPER ALLOY

FEMALE CONTACT (“CLOSED ENTRY” DESIGN)

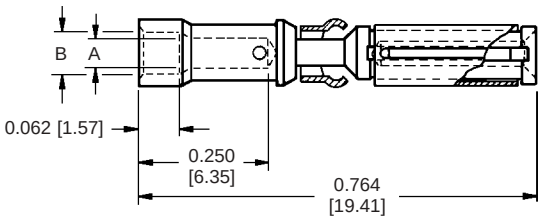

MALE CONTACT

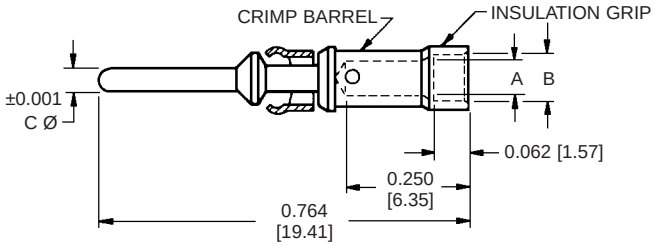

POWER AND SIGNAL CONTACTS

PART NUMBER	WIRE SIZE AWG/[mm²]	A	B	NOMINAL RATING
FC114N2	14 / 16 [2.5/1.5]	0.081 [2.06]	0.105 [2.67]	13 AMP
FC116N2	16 / 18 [1.5/1.0]	0.067 [1.70]	0.093 [2.36]	13 AMP
FC120N2	20 / 22 / 24 [0.5/0.3/0.25]	0.045 [1.14]	0.065 [1.65]	13 AMP
FC124N2	24 / 26 / 28 [0.25/0.12/0.08]	0.027 [0.69]	0.055 [1.40]	13 AMP
FC126N2	26 / 28 / 30 / 32 [0.12-0.03]	0.025 [0.64]	0.046 [1.17]	13 AMP
FC216N2	16 / 18 [1.5/0.8]	0.067 [1.70]	0.093 [2.36]	7.5 AMP
FC220N2	20 / 22 / 24 [0.5/0.3/0.25]	0.045 [1.14]	0.065 [1.65]	7.5 AMP
FC224N2	24 / 26 / 28 [0.25/0.12/0.08]	0.027 [0.69]	0.055 [1.40]	7.5 AMP

PART NUMBER	WIRE SIZE AWG/[mm²]	A	B	C	NOMINAL RATING
MC114N2	14 / 16 [2.5/1.5]	0.081 [2.06]	0.105 [2.67]	0.062 [1.57]	13 AMP
MC116N2	16 / 18 [1.5/1.0]	0.067 [1.70]	0.093 [2.36]	0.062 [1.57]	13 AMP
MC120N2	20 / 22 / 24 [0.5/0.3/0.25]	0.045 [1.14]	0.065 [1.65]	0.062 [1.57]	13 AMP
MC124N2	24 / 26 / 28 [0.25/0.12/0.08]	0.027 [0.69]	0.055 [1.40]	0.062 [1.57]	13 AMP
MC126N2	26 / 28 / 30 / 32 [0.12-0.03]	0.025 [0.64]	0.046 [1.17]	0.062 [1.57]	13 AMP
MC216N2	16 / 18 [1.5/0.8]	0.067 [1.70]	0.093 [2.36]	0.040 [1.02]	7.5 AMP
MC220N2	20 / 22 / 24 [0.5/0.3/0.25]	0.045 [1.14]	0.065 [1.65]	0.040 [1.02]	7.5 AMP
MC224N2	24 / 26 / 28 [0.25/0.12/0.08]	0.027 [0.69]	0.055 [1.40]	0.040 [1.02]	7.5 AMP

MATERIAL: COPPER ALLOY
FINISH: GOLD FLASH OVER NICKEL

REELS FOR FEEDING AUTO-CRIMPING TOOLS

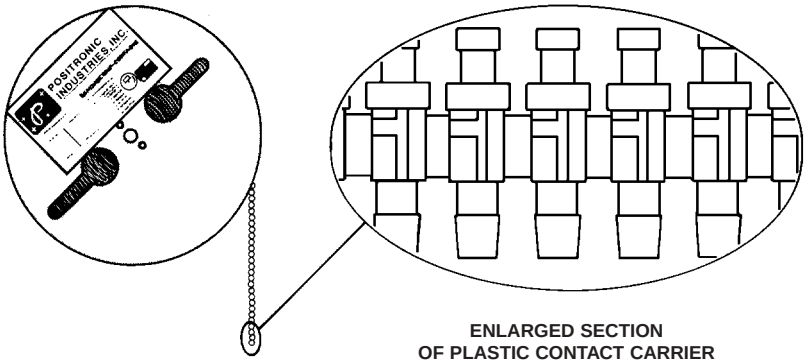

ENLARGED SECTION OF PLASTIC CONTACT CARRIER

REELED CONTACTS

Contacts may be supplied on plastic carriers, packaged on reels of 2,000 contacts for use with bench mounted automatic strip and crimp tool part number 9550-0 for contact sizes 14 AWG [2.5 mm^2] through 24 AWG [0.25 mm^2] or part number 9550-1 for contact size 26 AWG [0.12 mm^2]. The same type carrier is used for both male and female contacts of the same size and type, and requires no change in crimping tool.

All male and female crimp style contacts can be ordered in reels by adding the letter “R” after the contact part number, such as MC116NR for a male contact and FC120N2R for a female contact. Wire sizes 14 AWG [2.5 mm^2] to 28 AWG [0.08 mm^2] can be accommodated by the crimping.

DIMENSIONS ARE IN INCHES [MILLIMETERS].
ALL DIMENSIONS ARE SUBJECT TO CHANGE.

Downloaded from Arrow.com.

HEAVY-DUTY RECTANGULAR CONNECTORS WITH REMOVABLE CONTACTS

SOLDER CUP CONTACTS

FEMALE CONTACT (“CLOSED ENTRY” DESIGN)

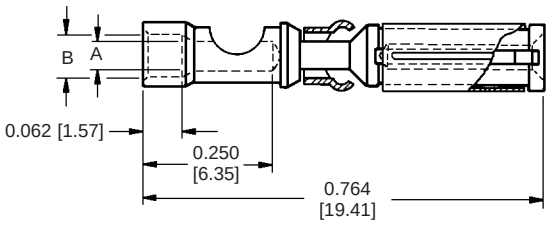

MALE CONTACT

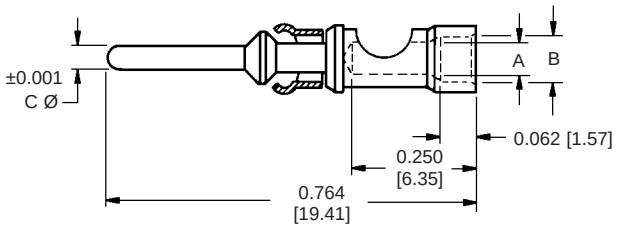

PART NUMBER	WIRE SIZE MAX.	A	B	NOMINAL RATING
FS114N2	14 AWG [2.5 mm²]	0.081 [2.06]	0.105 [2.67]	13 AMP
FS116N2	16 AWG [1.5 mm²]	0.067 [1.70]	0.093 [2.36]	13 AMP
FS120N2	20 AWG [0.5 mm²]	0.045 [1.14]	0.065 [1.65]	13 AMP
FS124N2	24 AWG [0.25 mm²]	0.027 [0.69]	0.055 [1.40]	13 AMP
FS216N2	16 AWG [1.5 mm²]	0.067 [1.70]	0.093 [2.36]	7.5 AMP
FS220N2	20 AWG [0.5 mm²]	0.045 [1.14]	0.065 [1.65]	7.5 AMP
FS224N2	24 AWG [0.25 mm²]	0.027 [0.69]	0.055 [1.40]	7.5 AMP

PART NUMBER	WIRE SIZE MAX.	A	B	C	NOMINAL RATING
MS114N	14 AWG [2.5 mm²]	0.081 [2.06]	0.105 [2.67]	0.062 [1.57]	13 AMP
MS116N	16 AWG [1.5 mm²]	0.067 [1.70]	0.093 [2.36]	0.062 [1.57]	13 AMP
MS120N	20 AWG [0.5 mm²]	0.045 [1.14]	0.065 [1.65]	0.062 [1.57]	13 AMP
MS124N	24 AWG [0.25 mm²]	0.027 [0.69]	0.055 [1.40]	0.062 [1.57]	13 AMP
MS216N	16 AWG [1.5 mm²]	0.067 [1.70]	0.093 [2.36]	0.040 [1.02]	7.5 AMP
MS220N	20 AWG [0.5 mm²]	0.045 [1.14]	0.065 [1.65]	0.040 [1.02]	7.5 AMP
MS224N	24 AWG [0.25 mm²]	0.027 [0.69]	0.055 [1.40]	0.040 [1.02]	7.5 AMP

MATERIAL: COPPER ALLOY
FINISH: GOLD FLASH OVER NICKEL

CONTACTS ARE NOT SUPPLIED WITH CONNECTORS AND MUST BE ORDERED SEPARATELY

MC120N

FC120N2

DIMENSIONS ARE IN INCHES [MILLIMETERS].
ALL DIMENSIONS ARE SUBJECT TO CHANGE.

Downloaded from Arrow.com.

Positronic Industries, Inc.
www.connectpositronic.com

HEAVY-DUTY RECTANGULAR CONNECTORS WITH REMOVABLE CONTACTS

Heavy-Duty Rectangular

MILITARY CRIMP CONTACTS

(QUALIFIED TO MIL-C-39029/34 AND MIL-C-39029/35)

FEMALE CONTACT (“CLOSED ENTRY” DESIGN)

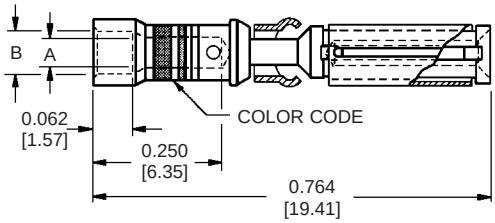

MALE CONTACT

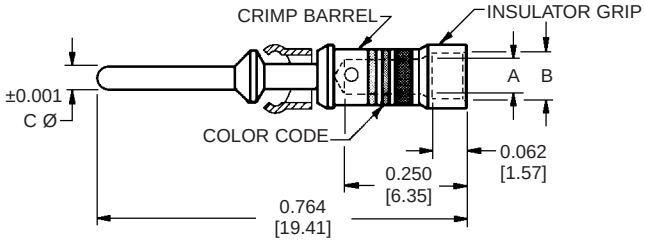

PART NUMBER	A	B	COLOR CODE
M39029/35-274	0.045 [1.14]	0.068 [1.73]	RED/ VIOLET/ YELLOW
M39029/35-275	0.045 [1.14]	0.068 [1.73]	RED/ VIOLET/ GREEN
M39029/35-276	0.067 [1.70]	0.093 [2.36]	RED/ VIOLET/ BLUE

PART NUMBER	A	B	C	COLOR CODE
M39029/34-271	0.045 [1.14]	0.068 [1.73]	0.040 [1.02]	RED/ VIOLET/ BROWN
M39029/34-272	0.045 [1.14]	0.068 [1.73]	0.062 [1.57]	RED/ VIOLET/ RED
M39029/34-273	0.067 [1.70]	0.093 [2.36]	0.062 [1.57]	RED/ VIOLET/ ORANGE

MATERIAL: COPPER ALLOY
FINISH: 0.000050 [1.27 MICRONS] GOLD OVER COPPER

COMPLIANT TERMINATION PRESS-FIT CONTACTS

PRECISION MACHINED, COPPER ALLOY

FEMALE CONTACT (“CLOSED ENTRY” DESIGN)

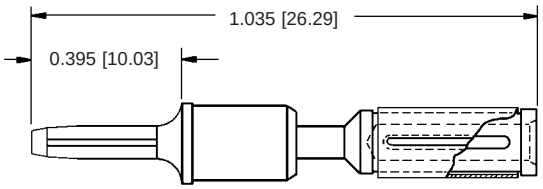

Part Number: FPF218N2

MALE CONTACT

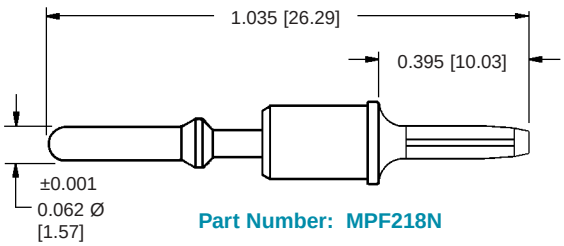

Part Number: MPF218N

FEMALE CONNECTOR

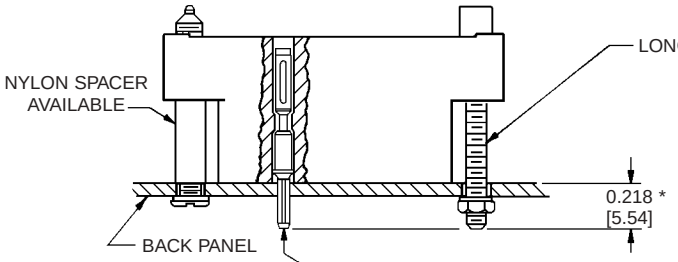

MALE CONNECTOR

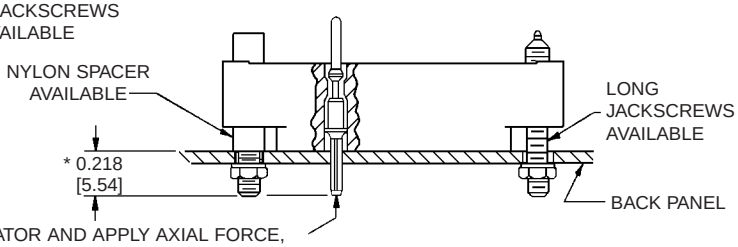

TO REPLACE CONTACT, REMOVE INSULATOR AND APPLY AXIAL FORCE, REPLACE WITH NEW CONTACT AND REPOSITION INSULATOR OVER CONTACTS

SUGGEST 0.069 [1.75] ±0.001 [0.03] Ø HOLE PLATED TO 0.063 [1.60] ±0.0035 [0.069] Ø HOLE FOR COMPLIANT CONTACT TERMINATION POSITIONS, PER IEC-352-5. SEE PAGE 7 FOR PRINTED BOARD CONTACT HOLE POSITIONS.

PRESS-FIT CONTACTS ARE NOT SUPPLIED WITH CONNECTORS AND MUST BE ORDERED SEPARATELY.

CONSULT Technical Sales FOR PRESS-FIT INSTALLATION TOOL.

CONSULT Technical Sales FOR PART NUMBERS FOR THE LONG JACKSCREW OR NYLON SPACER.

*** ADDITIONAL CONTACT EXTENSION LENGTHS AVAILABLE.**

CONSULT Technical Sales FOR AVAILABILITY OF SOLID PRESS-FIT CONTACTS.

MATERIAL: COPPER ALLOY
FINISH: GOLD FLASH OVER NICKEL

DIMENSIONS ARE IN INCHES [MILLIMETERS].
ALL DIMENSIONS ARE SUBJECT TO CHANGE.

Downloaded from Arrow.com.

HEAVY-DUTY RECTANGULAR CONNECTORS WITH REMOVABLE CONTACTS

STRAIGHT SOLDER CONTACTS

PRECISION MACHINED, SOLID COPPER ALLOY

FEMALE CONTACT ("CLOSED ENTRY" DESIGN)

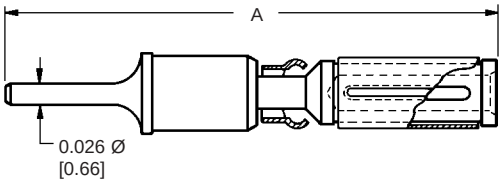

MALE CONTACT

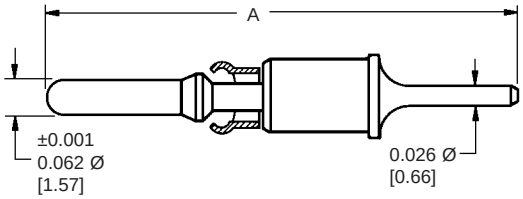

MATERIAL: COPPER ALLOY

FINISH: GOLD FLASH OVER NICKEL

PART NUMBER	A	B
FDS125N2	0.950 [24.13]	0.125 [3.18]
FDS156N2	0.981 [24.92]	0.156 [3.96]
FDS187N2	1.012 [25.70]	0.187 [4.75]

CONSULT Technical Sales FOR CONTACTS OF DIFFERENT LENGTHS AND TAIL DIAMETERS

UNLESS SPECIFIED OTHERWISE, STRAIGHT SOLDER CONTACTS ARE NOT SUPPLIED WITH CONNECTORS AND MUST BE ORDERED SEPARATELY

CONTACTS MAY BE INSTALLED IN CONNECTOR TO CUSTOMER ORDER

PART NUMBER	A	B
MDS125N	0.950 [24.13]	0.125 [3.18]
MDS156N	0.981 [24.92]	0.156 [3.96]
MDS187N	1.012 [25.70]	0.187 [4.75]

FEMALE CONNECTOR

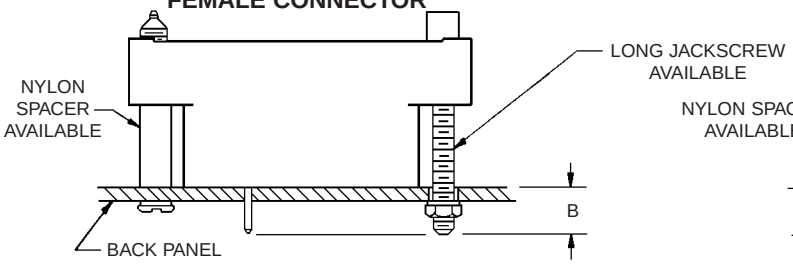

MALE CONNECTOR

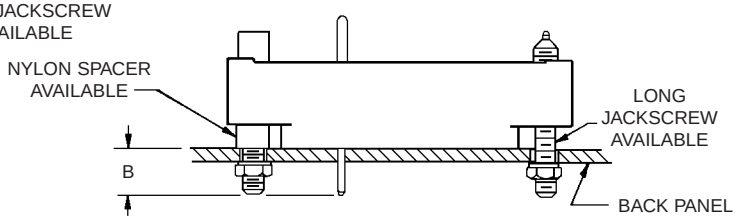

CONSULT Technical Sales FOR PART NUMBERS FOR THE LONG JACKSCREW OR NYLON SPACER

WRAP POST CONTACTS

PRECISION MACHINED, SOLID COPPER ALLOY

FEMALE CONTACT ("CLOSED ENTRY" DESIGN)

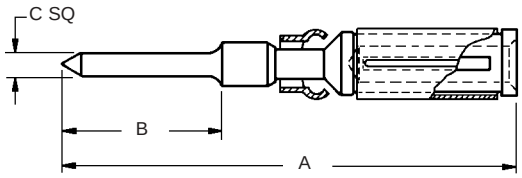

MALE CONTACT

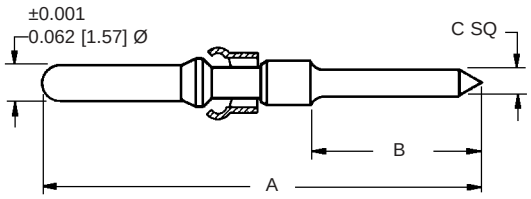

PART NUMBER	A	B	C	D
FW814N2	1.335 [33.91]	0.695 [17.65]	0.025 [0.64]	0.500 [12.70]
FW845N2	1.335 [33.91]	0.695 [17.65]	0.045 [1.14]	0.500 [12.70]

PART NUMBER	A	B	C	D
MW814N	1.335 [33.91]	0.695 [17.65]	0.025 [0.64]	0.500 [12.70]
MW845N	1.335 [33.91]	0.695 [17.65]	0.045 [1.14]	0.500 [12.70]

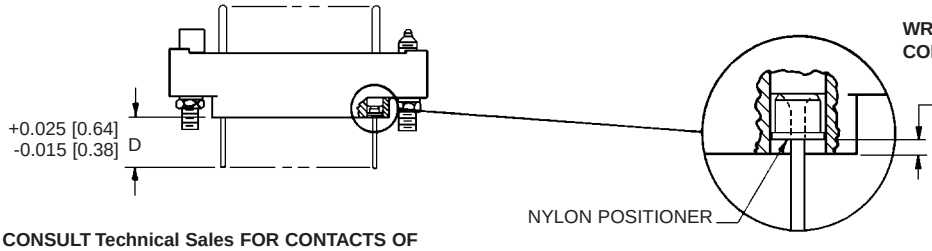

WRAP POST CONTACTS ARE NOT SUPPLIED WITH CONNECTOR AND MUST BE ORDERED SEPARATELY

ORDER POSITIONER 9167-1 WITH THE 0.025 SQ. CONTACT AND 9167-2 WITH THE 0.045 SQ. CONTACT

CONSULT Technical Sales FOR CONTACTS OF DIFFERENT TAIL LENGTHS

CONSULT Technical Sales FOR NYLON POSITIONER INSTALLATION TOOL

MATERIAL: COPPER ALLOY

FINISH: GOLD FLASH OVER NICKEL

DIMENSIONS ARE IN INCHES [MILLIMETERS]. ALL DIMENSIONS ARE SUBJECT TO CHANGE.

Downloaded from Arrow.com.

Positronic Industries, Inc.
www.connectpositronic.com

HEAVY-DUTY RECTANGULAR CONNECTORS WITH REMOVABLE CONTACTS

CRIMP SHIELDED CONTACTS

MALE CONTACT

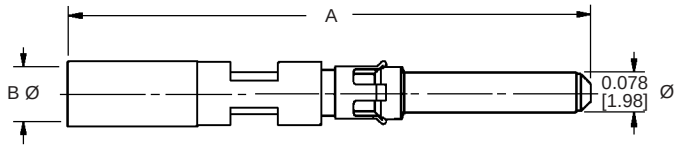

FEMALE CONTACT

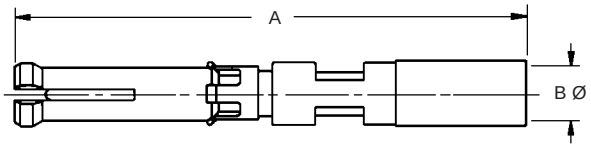

FCS126N2

MCS126N

CONTACT DESIGNATION	PART NUMBER	A	B Ø	CABLE SIZE
MALE	MCS126N	0.993 [25.22]	0.045 [1.14]	RG 178 B/U RG 196 A/U
FEMALE	FCS126N2	0.967 [24.56]	0.045 [1.14]	RG 178 B/U RG 196 A/U
MALE	MCS226N	1.048 [26.62]	0.070 [1.78]	RG 179 B/U RG 316 /U
FEMALE	FCS226N2	1.022 [25.96]	0.070 [1.78]	RG 179 B/U RG 316 /U

TECHNICAL CHARACTERISTICS

MATERIALS AND FINISHES:

Insulating Material: (Dielectric) PCTFE.

Inner Contacts: Phosphor bronze, 0.000030 inch [0.8 microns] gold over nickel.

Outer Contacts: Brass and beryllium copper, gold flash over nickel.

MECHANICAL CHARACTERISTICS:*

Contact Retention In Insulator: 20 lbs. [89N].

Removable Contacts: Rear insertion, front removable.

Insertion Force Per Contact: 8 oz. [2.2N] per contact maximum.

Durability: 100 cycles minimum.

Vibration: 20g from 10 HZ to 500 HZ.

Shock: 30g - 11 ms.

ELECTRICAL CHARACTERISTICS:

MICRO-COAXIAL CONTACTS	Contact/Wire Combinations			
	126N		226N	
	RG178	RG196	RG179	RG316
Characteristic Impedance (ohms)	50	50	75	50
Frequency Range	0-500 MHz			
VSWR				
0 to 200 MHz	1.25			
200 to 500 MHz	1.70		2.25	
Insertion Loss @ 500 MHz	0.2 dB		1.0 dB	

Dielectric Strength At Sea Level: 600 V rms.

Initial Contact Resistance: 0.012 ohms maximum.

Insulator Resistance: 5 G ohms.

CLIMATIC CHARACTERISTICS:

Temperature Range: -55°C to +125°C.

9506-0 CRIMP TOOL

SHIELDED CABLE STRIP LENGTH

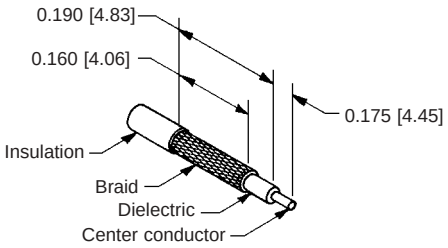

DIMENSIONS ARE IN INCHES [MILLIMETERS].
ALL DIMENSIONS ARE SUBJECT TO CHANGE.

Downloaded from Arrow.com.

CRIMPING INFORMATION FOR GMCT SERIES CRIMP CONTACTS

USE INDICATED POSITRONIC TOOLS FOR BEST RESULTS

Step 1: Strip wire to indicated length.

Take Care Not To:
- **Damage or remove strands.**
- **Untwist or overtwist strands.**
- **Leave insulation particles on strands.**
- **Damage insulation.**

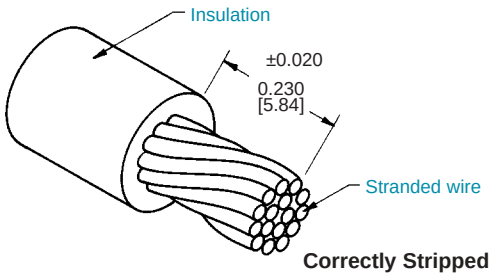

Correctly Stripped Wire

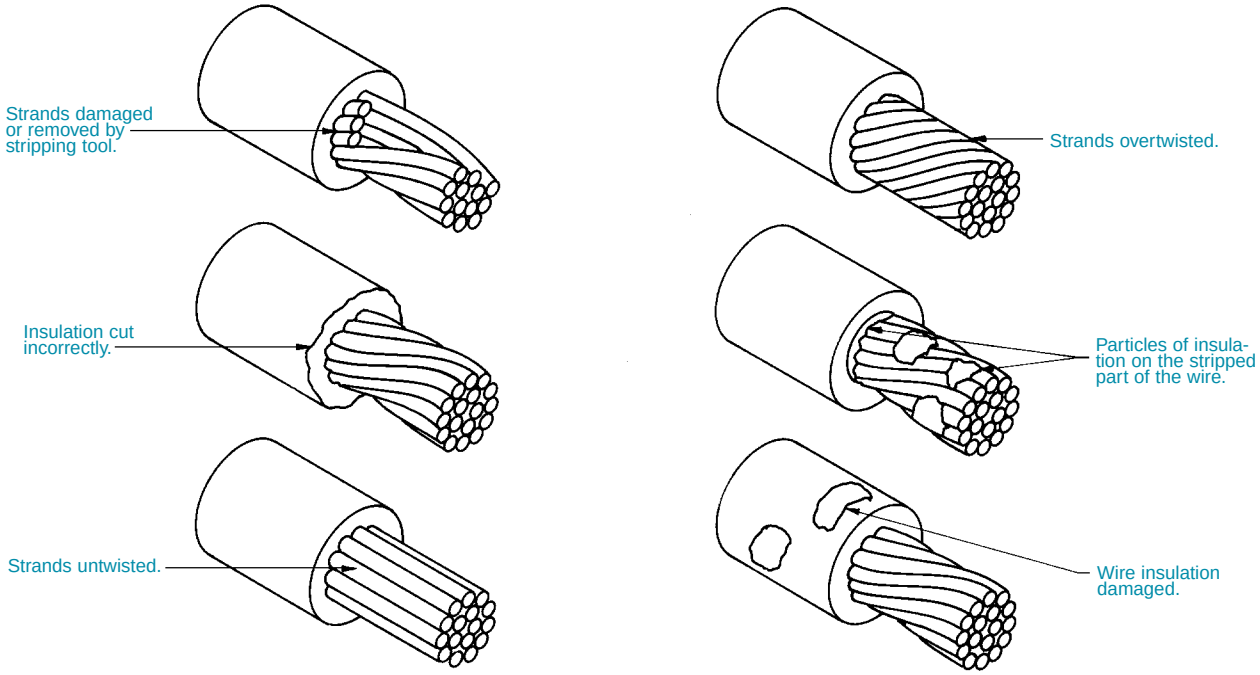

Examples of Stripping Faults

Step 2: Crimp wire to contact.

For Hand Crimp Tool:
- **Place contact into crimping tool.**
- **Insert wire into contact.**
- **Center contact by slowly closing the crimping tool until the crimp indenters make contact with the crimp barrel.**
- **Complete the cycle of the crimping tool in one smooth motion.**
- **Remove the crimped contact.**

For Automatic Feed Pneumatic Crimp Tool:
- **Insert the wire into the contact, positioned in the crimp tool by the plastic carrier.**
- **Depress the activating device of the crimping tool to start the crimping cycle.**
- **Remove the crimped contact.**

Downloaded from Arrow.com.

CRIMPING INFORMATION FOR GMCT SERIES CRIMP CONTACTS

Step 3: Inspect the crimp.

For All Tools:
- **Strands to be visible through the inspection hole.**
- **Strands not to be visible beyond the insulation support.**
- **Crimped contact to meet recommended conductor tensile force shown in chart.**
- **Check for peeled gold and bent contacts.**

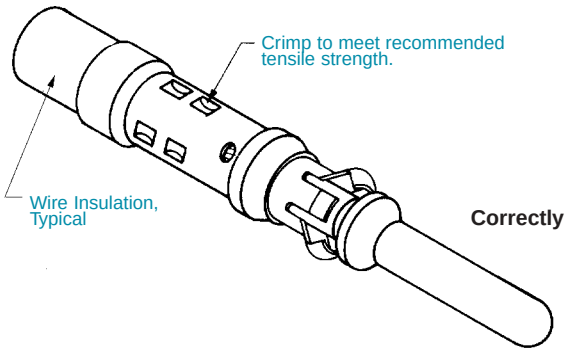

Correctly Crimped Contact

Cross Section of Correctly Crimped Contact

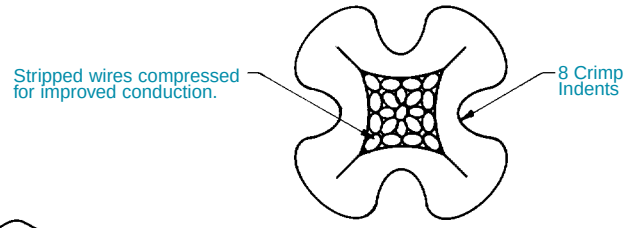

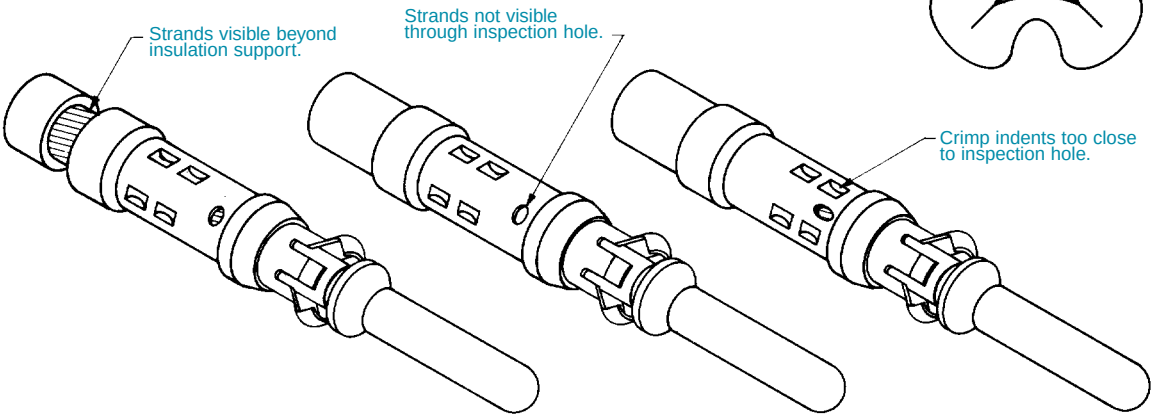

Stripped part of the wire too long. **Stripped part of the wire too short.** **Crimp indents incorrectly located.**

Examples of Crimping Faults

Positronic Recommended Conductor Tensile Strength	
WIRE SIZE AWG/[mm²]	**AXIAL LOAD POUNDS/[N]**
14 [2.5]	70 [311]
16 [1.5]	50 [222]
18 [1.0]	28 [125]
20 [0.5]	20 [89]
22 [0.3]	12 [53]
24 [0.25]	8 [36]
26 [0.12]	5 [22]
28 [0.08]	3 [13]
30 [0.05]	1.5 [6.7]
32 [0.03]	1.0 [4.4]

POSITRONIC RECOMMENDED TOOLS		
TOOL TYPE	**CONTACT SIZE AWG [mm²]**	**TOOL NUMBERS**
AUTOMATIC FEED PNEUMATIC CRIMP TOOL:	14-24 [2.5-0.25]	9550-0-0-0
	26 [0.12]	9550-1-0-0
HAND CRIMP TOOL:	14-24 [2.5-0.25]	9501-0-0-0 WITH 9502-1-0-0 POSITIONER
	26 [0.12]	9507-0-0-0 WITH 9502-18-0-0 POSITIONER
INSERTION TOOL:	N/A	9099-0-0-0
EXTRACTION TOOL:	N/A	9081-0-0-0

Conductor tensile strength values are derived using silver-tin plated copper wires. Values may change depending upon what type of wire is used.

**DIMENSIONS ARE IN INCHES [MILLIMETERS].
ALL DIMENSIONS ARE SUBJECT TO CHANGE.**

Downloaded from Arrow.com.

HEAVY-DUTY RECTANGULAR CONNECTORS WITH REMOVABLE CONTACTS

CYCLE-CONTROLLED STEP ADJUSTABLE HAND CRIMP TOOL

****M22520/1-01**
****Part No. 9501-0-0-0**

Features of this positive ratchet action tool include accommodations for wire sizes 14 AWG [2.5 mm^2] through 26 AWG [0.12 mm^2] and eight (8) impression crimp on wires and contacts of various compositions. Required for use with this basic tool is the turret head part number 9502-1-0-0.

CONTACT CARRIERS FOR AUTOMATIC FEED TOOL

Molded thermoplastic carriers in a continuous belt feed contacts to the crimp station of the automatic feed tool. They also locate the contacts in respect to the tool's indenters. The carriers are color coded red, blue, yellow, green, orange or natural for contact identification for both MS and proprietary applications.

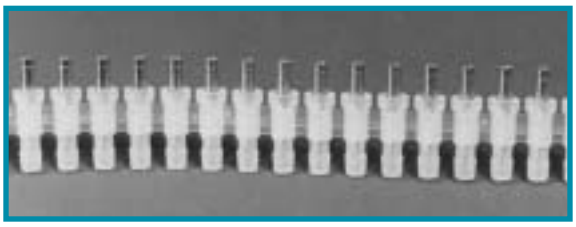

AUTOMATIC FEED CRIMP TOOL, PNEUMATICALLY ACTUATED

Part No. 9550-0-0-0

This fast cycling automatic crimp tool produces an 8 indent crimp on wire sizes 14 AWG [2.5 mm^2] through 32 AWG [0.03 mm^2].

*To order, specify part number 9550-0-0-0. Foot control valve is supplied as a standard accessory.

*Specify part number 9550-1-0-0 for FC126N2 and MC126N contacts only for automatic feed crimp tool.

**Specify part number 9507-0-0-0 crimp tool and 9502-18-0-0 positioner for cycle controlled step adjustable hand crimp tool for FC126N2 and MC126N contacts only.

Downloaded from Arrow.com.

HEAVY-DUTY RECTANGULAR CONNECTORS WITH REMOVABLE CONTACTS

CONTACT INSERTION TOOL

Part No. 9099-0-0-0

An easy to use contact insertion tool for 14 AWG [2.5 mm^2] and smaller wires. See photographic demonstration shown below for recommended insertion procedure.

CONTACT EXTRACTION TOOL

Part No. 9081-0-0-0

The spring loaded contact extraction tool simplifies the extraction of removable contacts from the connector insulators. Simply insert the hollow tool tip over the male or female contact from the front face of the insulator, rotate the tool slightly while increasing the pushing force against the butt of the extraction tool. The contact will be released from the insulator retention system and “pop out” of the rear face of the insulator. See photo below for recommended removal procedure.

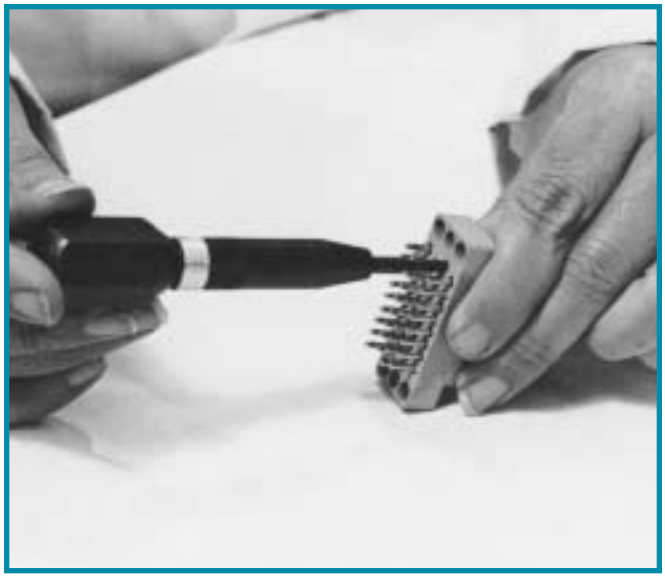

DIMENSIONS ARE IN INCHES [MILLIMETERS].
ALL DIMENSIONS ARE SUBJECT TO CHANGE.

Downloaded from Arrow.com.

REMOVABLE CONTACT ORDERING ASSISTANCE CHART

GMCT SERIES CRIMP AND SOLDER CUP CONTACT TERMINATIONS

TERMINATION TYPE	CONTACT FUNCTION	CONTACT SIZE	WIRE SIZE	MALE PART NUMBER	FEMALE PART NUMBER
CRIMP	POWER	16	14 AWG [2.5 mm²] - 16 AWG [1.5 mm²]	MC114N	FC114N2
			16 AWG [1.5 mm²] - 18 AWG [1.0 mm²]	MC116N	FC116N2
		20	16 AWG [1.5 mm²] - 18 AWG [1.0 mm²]	MC216N	FC216N2
	SIGNAL	16	20 AWG [0.5 mm²] - 24 AWG [0.25 mm²]	MC120N	FC120N2
			24 AWG [0.25 mm²] - 28 AWG [0.08 mm²]	MC124N	FC124N2
			26 AWG [0.12 mm²] - 32 AWG [0.03 mm²]	MC126N	FC126N2
		20	20 AWG [0.5 mm²] - 24 AWG [0.25 mm²]	MC220N	FC220N2
			24 AWG [0.25 mm²] - 28 AWG [0.08 mm²]	MC224N	FC224N2
	MILITARY	16	16 AWG [1.5 mm²] - 20 AWG [0.5 mm²]	M39029/34-273	M39029/35-276
			20 AWG [0.5 mm²] - 24 AWG [0.25 mm²]	M39029/34-272	M39029/35-275
		20	20 AWG [0.5 mm²] - 24 AWG [0.25 mm²]	M39029/34-271	M39029/35-274
	COAX	--	RG 178 B/U, RG 196 A/U	MCS126N	FCS126N2
			RG 179 A/U, RG 316 /U	MCS226N	FCS226N2
SOLDER CUP	POWER	16	14 AWG [2.5 mm²] max.	MS114N	FS114N2
			16 AWG [1.5 mm²] max.	MS116N	FS116N2
		20	16 AWG [1.5 mm²] max.	MS216N	FS216N2
	SIGNAL	16	20 AWG [0.5 mm²] max.	MS120N	FS120N2
			24 AWG [0.25 mm²] max.	MS124N	FS124N2
		20	20 AWG [0.5 mm²] max.	MS220N	FS220N2
			24 AWG [0.25 mm²] max.	MS224N	FS224N2

FOR ORDERING CRIMP CONTACTS ON REELS, ADD R TO PART NUMBER.
EXAMPLES: MC114NR OR FC114N2R.

GMCT SERIES PRINTED BOARD MOUNT CONTACT TERMINATIONS

TERMINATION TYPE	CONTACT SIZE	USABLE TERMINATION LENGTH	TERMINATION DIMENSION	MALE PART NUMBER	FEMALE PART NUMBER
STRAIGHT	16	0.125 [3.18]	0.026 Ø [0.66]	MDS125N	FDS125N2
		0.156 [3.96]	0.026 Ø [0.66]	MDS156N	FDS156N2
		0.187 [4.75]	0.026 Ø [0.66]	MDS187N	FDS187N2
WRAP POST	16	0.695 [17.65]	0.025 SQUARE [0.64]	MW814N	FW814N2
		0.695 [17.65]	0.045 SQUARE [1.14]	MW845N	FW845N2
COMPLIANT PRESS FIT	16	0.218 [5.54]		MPF218N	FPF218N2

DIMENSIONS ARE IN INCHES [MILLIMETERS].
ALL DIMENSIONS ARE SUBJECT TO CHANGE.

Downloaded from Arrow.com.

Positronic Industries, Inc.
www.connectpositronic.com

HEAVY-DUTY RECTANGULAR CONNECTORS WITH REMOVABLE CONTACTS

ORDERING INFORMATION – CODE NUMBERING SYSTEM

Specify Complete Connector By Following Steps 1 Through 9
Insert "0" When Step Is Not Used

STEP	1	2	3	4	5	6	7	8	9	—	10
	GMCT	34	F	0	0	R	A	Z	0		

STEP 1 - Basic Series
GMCT Series.

STEP 2 - GMCT Series Connector Variants
9, 14, 18, 20, 26, 34, 41, 42, 50, 66, 75, 104

STEP 3 - Connector Gender
M - Male insulator.
F - Female insulator.

STEP 4 - Contact Termination Type
All Female contacts "closed entry" design.
0 - Contacts to be ordered separately, see Contact ordering charts.

*STEP 5 - Polarizing Guides and Jackscrew System
G - Polarizing grounding guides.
N - Polarizing guides.
NSS - Stainless steel polarizing guides.
T - Fixed jackscrews.
E - Short turnable jackscrews, offered with set screw option.
EL - Long turnable jackscrews, offered with set screw option.
E1 - Turnable jackscrews used on 9, 14, 18, 20, 26 and 41 variant hoods, offered with set screw option.
0 - If no polarizing guides or jackscrews are required. Also, use "0" if ordering hoods equipped with jackscrews, for variants 34, 42, 50, 66, 75 and 104, see STEP 8.

STEP 6 - Shells and Mounting Plates
P - Male shell, not available on 41 variant.
R - Female shell, not available on 41 variant.
H - Mounting plate, not available on 41 variant.
W - Male shell with mounting plate.
U - Female shell with mounting plate.
0 - If no shells or mounting plates are required.

STEP 7 - Polarization Positions of Shells
Select letter to designate position of male pin and female slot for polarization system.
A, B, C, D, E, F, G
0 - If no polarization is required or if no shells are required.

STEP 8 - Cable Adapters (Hoods)
J - Top opening hood (formed), not offered on 66 and 104 variants.
L - Side opening hood (formed), not offered on 66 and 104 variants.
Q - Top opening hood (drawn), offered on 66 and 104 variants.
S - Side opening hood (drawn), offered on 66 and 104 variants.
Y - Top opening hood (formed), equipped with stainless steel jackscrew system, offered on 34, 42, 50 and 75 variants.
I - Side opening hood (formed), equipped with stainless steel jackscrew system, offered on 34, 42, 50 and 75 variants.
Z - Top opening hood (drawn), equipped with stainless steel jackscrew system, offered on 34, 50, 66, 75 and 104 variants.
V - Side opening hood (drawn), equipped with stainless steel jackscrew system, offered on 34, 50, 66, 75 and 104 variants.
0 - If no hoods are required.

STEP 9 - Additional Options
B - For black anodized aluminum parts.
C - Set screw option, offered on the E, EL and E1.
R - For yellow chromate coating on aluminum parts.
V - Lock tab, offered on 9, 14, 18, 20, 26, 34, 41 and 42 variants.
VL - Lock lever, offered on 9, 14, 18, 20, 26, 34, 41 and 42 variants.
FB - Floating bushings for mounting plate.
0 - If no additional options are required.

*** NOTE: FOR DETAILS OF ITEMS LISTED IN STEPS 5 THROUGH 9, SEE HEAVY-DUTY RECTANGULAR CONNECTOR ACCESSORIES SECTION ON FOLLOWING PAGES.**

DIMENSIONS ARE IN INCHES [MILLIMETERS].
ALL DIMENSIONS ARE SUBJECT TO CHANGE.

Downloaded from Arrow.com.

HEAVY-DUTY RECTANGULAR PRINTED BOARD CONNECTORS WITH STRAIGHT SOLDER CONTACTS

Size 16 Contacts
Conforms to
MIL-DTL-28748
IEC Publication 807-1

U.L. Recognized,
File #E49351

Telecommunication
U.L. File #E140980

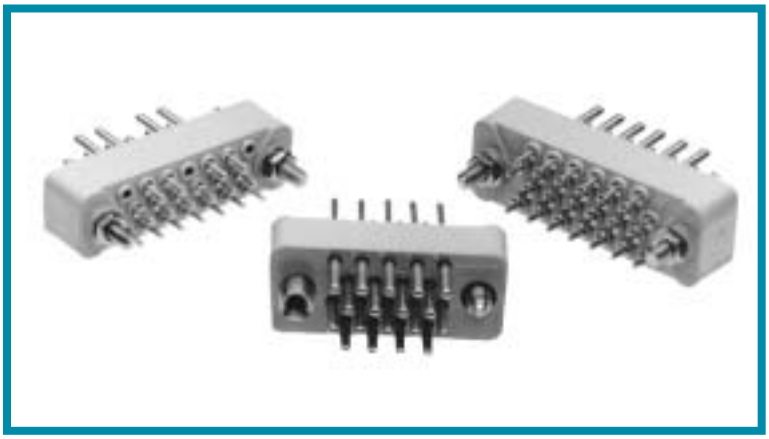

GAP Series connectors are heavy-duty, multi-pole, low profile, high reliability connectors. Contacts are male only with 0.062 inch [1.57mm] diameters, rated to 7.5 amperes per contact. Termination style is straight solder printed board mount. GAP Series connectors are intermateable with Positronic GMCT Series connectors.

A wide array of mounting, locking and polarizing accessories is available for this series. For details, see the Heavy-Duty Rectangular Connector Accessories section.

Due to its printed board mount termination style, and its 0.062 inch [1.57mm] diameter contacts, the GAP Series is ideal for heavy-duty applications found in avionics, medical equipment, telecommunications, instrumentation and process control applications.

GAP SERIES TECHNICAL CHARACTERISTICS

MILITARY SPECIFICATIONS:

Conforms to MIL-DTL-28748.

INTERNATIONAL STANDARDS:

IEC 807-1.
U.L. Recognized.

MATERIALS AND FINISHES:

Insulator:	Glass filled DAP per ASTM-D-5948 type SDG-F. Grey color is standard, black available.
Fixed Contacts:	Copper alloy with gold flash over nickel. Other finishes available upon request.
Jackscrew System:	Passivated stainless steel.
Polarizing Guides:	Copper alloy with nickel plate or passivated stainless steel.
Vibration Locks:	Copper alloy with zinc plate and dichromate seal.

MECHANICAL CHARACTERISTICS:

Fixed Contacts:	**Male** – Size 16: 0.062 inch [1.57 mm] diameter.
Contact Retention in Insulator:	10 lbs. [44.5N] minimum.
Contact Termination:	Straight printed board mounted.
Locking Systems:	Friction, vibration locks and jackscrews.
Polarization:	Guide pins and guide sockets, and jackscrew system.
Mechanical Operations:	1000 operations per IEC 512-5.
Jackscrews:	Standard threads, 6-32 UNC. Metric threads, M3X0.5 available.

ELECTRICAL CHARACTERISTICS:

Contact Current Rating (maximum):	7.5 amperes limited at contact termination diameter.
Initial Contact Resistance:	0.003 ohms.
Flash over Voltage:	2500 V.AC [rms].
Test Voltage:	1200 V.AC [rms].
Insulation Resistance (minimum):	5 G ohms.
Clearance and Creepage Distance (minimum):	0.047 inch [1.19 mm].
Working Temperature:	-55°C to 125°C.
Working Voltage:	250 V.AC [rms].

DIMENSIONS ARE IN INCHES [MILLIMETERS].
ALL DIMENSIONS ARE SUBJECT TO CHANGE.

Downloaded from Arrow.com.

HEAVY-DUTY RECTANGULAR PRINTED BOARD CONNECTORS WITH STRAIGHT SOLDER CONTACTS

STRAIGHT SOLDER CONTACTS

(MALE ONLY)

CONTACT MATERIAL: COPPER ALLOY
CONTACT FINISH: GOLD FLASH OVER NICKEL

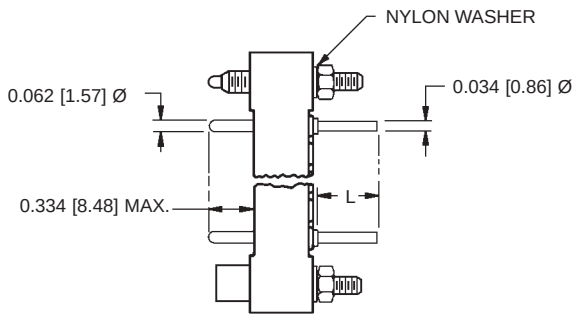

CONTACT CODE	L
DS3	0.093 [2.36]
DS4	0.125 [3.18]
DS5	0.156 [3.96]
DS6	0.187 [4.75]

Typical Part Number: GAP34MDS6T0000

SEE GMCT SERIES PRINTED BOARD HOLE PATTERN PAGE FOR CONNECTOR VARIANT CONTACT HOLE POSITIONS

SPECIFY CONTACT CODE IN STEP 4 OF ORDERING INFORMATION FOR DESIRED LENGTH OF CONTACT TERMINATION

GAP SERIES, LOW PROFILE, PRINTED BOARD MOUNT CONNECTOR

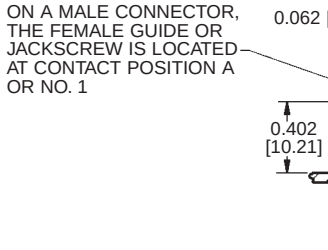

GAP34MDS4T0000

GMCT SERIES, HIGH PROFILE, PRINTED BOARD MOUNT CONNECTOR

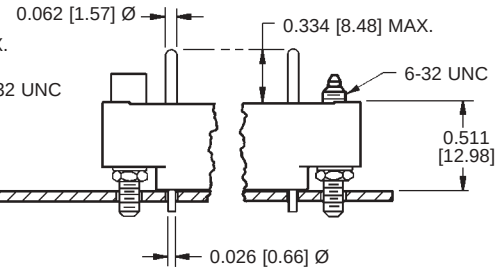

GMCT34M0T0000 WITH MDS125N CONTACTS INSTALLED

**DIMENSIONS ARE IN INCHES [MILLIMETERS].
ALL DIMENSIONS ARE SUBJECT TO CHANGE.**

Downloaded from Arrow.com.

CONTACT HOLE POSITION DIMENSIONS AND PRINTED BOARD HOLE PATTERN

MATING FACE OF FEMALE CONNECTOR OR REAR FACE OF MALE CONNECTOR

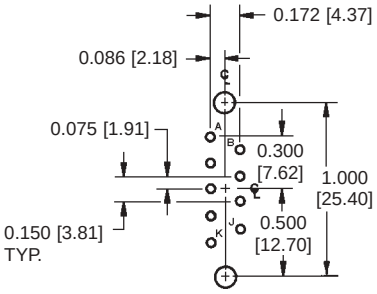

SIZE 9

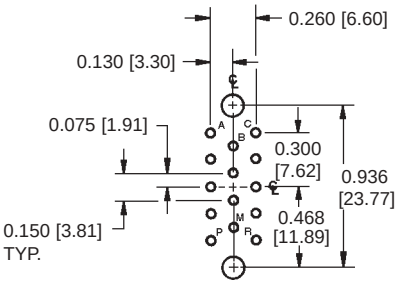

SIZE 14

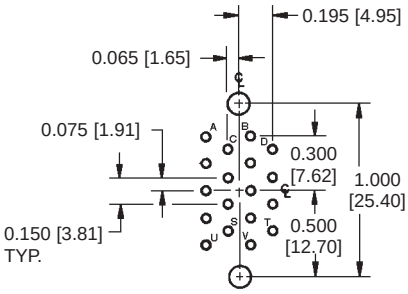

SIZE 18

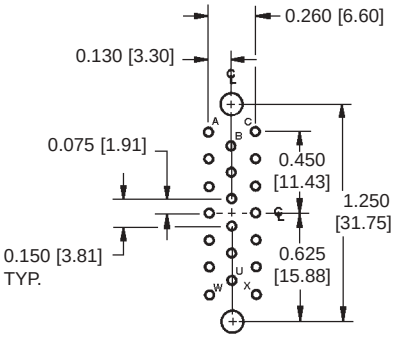

SIZE 20

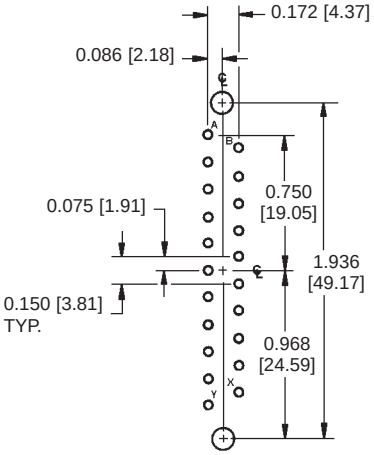

SIZE 21

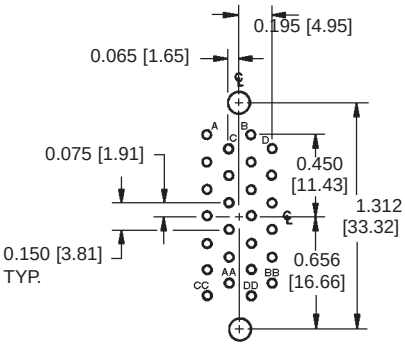

SIZE 26

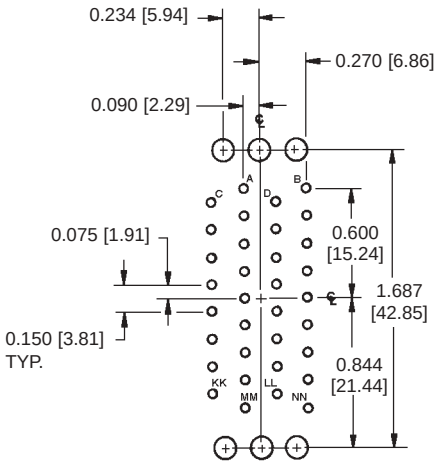

SIZE 34

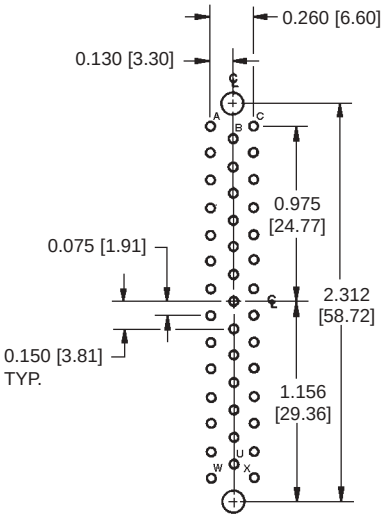

SIZE 41

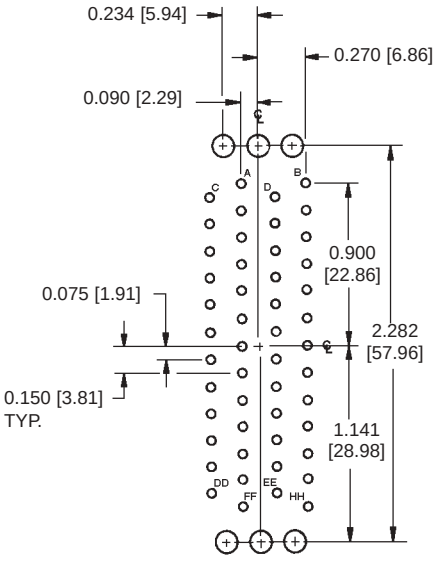

SIZE 50

HOLE IDENTIFICATION FOR REFERENCE ONLY

SUGGEST 0.120 [3.05] Ø HOLES IN PRINTED BOARD FOR CONNECTOR MOUNTING HOLES

SUGGEST 0.052 [1.32] Ø HOLES IN PRINTED BOARD FOR GAP SERIES CONNECTOR CONTACT TERMINATIONS

DIMENSIONS ARE IN INCHES [MILLIMETERS]. ALL DIMENSIONS ARE SUBJECT TO CHANGE.

Downloaded from Arrow.com.

ORDERING INFORMATION – CODE NUMBERING SYSTEM

Specify Complete Connector By Following Steps 1 Through 9
Insert "0" When Step Is Not Used

STEP	1	2	3	4	5	6	7	8	9	—	10
	GAP	26	M	DS4	T	0	0	0	0		

STEP 1 - Basic Series
GAP Series
(Male Connector Only).

STEP 2 -
GAP Series Connector Variants
9, 14, 18, 20, 21, 26, 34, 41, 50

STEP 3 - Connector Gender
M - Male insulator only.

STEP 4 - Contact Termination Type
DS3 - Straight solder 0.093 [2.36]
DS4 - Straight solder 0.125 [3.18]
DS5 - Straight solder 0.156 [3.96]
DS6 - Straight solder 0.187 [4.75]

***STEP 5 - Polarizing Guides and Jackscrew System**
G - Polarizing grounding guides.
N - Polarizing guides.
NSS - Stainless steel polarizing guides.
T - Fixed jackscrews.
0 - If no polarizing guides or jackscrews are required.

STEP 6 - Shells and Mounting Plates
P - Male shell, not available on 41 variant.
R - Female shell, not available on 41 variant.
0 - If no shells or mounting plates are required.

STEP 7 - Polarization Positions of Shells
Select letter to designate position of male pin and female slot for polarization system.
A, B, C, D, E, F, G
0 - If no polarization is required or if no shells are required.

STEP 8 - Cable Adapters [Hoods]
0 - Not offered for GAP series.

STEP 9 - Additional Options
B - For black anodized aluminum parts.
R - For yellow chromate coating on aluminum parts.
V - Lock tab, offered on 9, 14, 18, 20, 21, 26, 34 and 41 variants.
0 - If no additional options are required.

*** NOTE: FOR DETAILS OF ITEMS LISTED IN STEPS 5 THROUGH 9, SEE HEAVY-DUTY RECTANGULAR CONNECTOR ACCESSORIES SECTION.**

DIMENSIONS ARE IN INCHES [MILLIMETERS].
ALL DIMENSIONS ARE SUBJECT TO CHANGE.

Downloaded from Arrow.com.

HEAVY-DUTY RECTANGULAR RIGHT ANGLE PRINTED BOARD CONNECTORS

Size 16 Contacts
Conforms to
MIL-DTL-28748
IEC Publication 807-1

U.L. Recognized,
File #E49351

Telecommunication
U.L. File #E140980

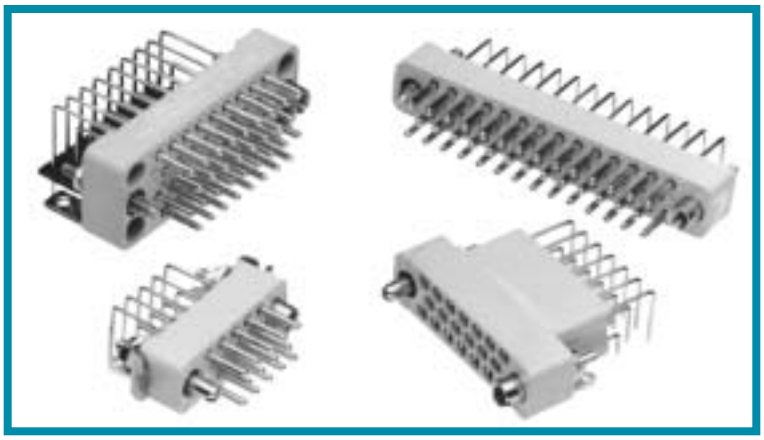

GAPL Series connectors are heavy-duty, multi-pole, high reliability connectors conforming to MIL-DTL-28748 specifications. Termination style is right angle printed board mount. GAPL Series connectors are intermateable with Positronic GMCT Series connectors.

GAPL Series connectors are offered with a variety of mounting, locking and polarizing accessories. For details, see the Heavy-Duty Rectangular Connector Accessories section.

GAPL Series connectors are ideal for high reliability, heavy-duty applications which require a printed board mounted connector. They are widely utilized in navigational systems, robotics, mainframe and peripheral computers, medical equipment, telecommunications, instrumentation and process control applications.

GAPL SERIES TECHNICAL CHARACTERISTICS

MILITARY SPECIFICATIONS:

Conforms to MIL-DTL-28748.

INTERNATIONAL STANDARDS:

IEC 807-1.
U.L. Recognized.

MATERIALS AND FINISHES:

Insulator:	Glass filled DAP per ASTM-D-5948 type SDG-F. Grey color is standard, black available.
Fixed Contacts:	Copper alloy with gold over nickel. Other finishes avaiable upon request.
Jackscrew System:	Passivated stainless steel.
Polarizing Guides:	Copper alloy with nickel plate or passivated stainless steel.
Vibration Locks:	Copper alloy with zinc plate and dichromate seal.

MECHANICAL CHARACTERISTICS:

Fixed Contacts:	**Male** – Size 16: 0.062 inch [1.57 mm] diameter. **Female** – "Closed entry" design for highest reliability.
Contact Retention in Insulator:	10 lbs. [44.5N] minimum.
Contact Termination:	Right angle printed board mounted.
Locking Systems:	Friction, vibration locks and jackscrews.
Polarization:	Guide pins and guide sockets, and jackscrew system.
Mechanical Operations:	1000 operations per IEC 512-5.
Jackscrews:	Standard threads, 6-32 UNC. Metric threads, M3X0.5 available.

ELECTRICAL CHARACTERISTICS:

Contact Current Rating (maximum):	7.5 amperes limited at contact termination diameter.
Initial Contact Resistance:	0.003 ohms.
Flash over Voltage:	2500 V.AC [rms].
Test Voltage:	1200 V.AC [rms].
Insulation Resistance (minimum):	5 G ohms.
Clearance and Creepage Distance (minimum):	0.047 inch [1.19 mm].
Working Temperature:	-55°C to 125°C.
Working Voltage:	250 V.AC [rms].

DIMENSIONS ARE IN INCHES [MILLIMETERS].
ALL DIMENSIONS ARE SUBJECT TO CHANGE.

Downloaded from Arrow.com.

RIGHT ANGLE PRINTED BOARD MOUNT CONNECTORS

MALE CONNECTOR

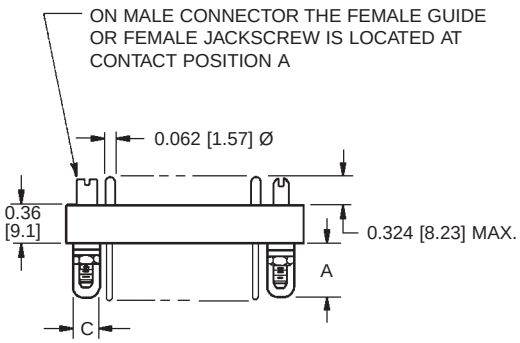

SIZE	A	B	C
9	0.290 [7.37]	0.212 [5.38]	0.156 [3.96]
14	0.290 [7.37]	0.212 [5.38]	0.156 [3.96]
18	0.290 [7.37]	0.212 [5.38]	0.156 [3.96]
20	0.290 [7.37]	0.212 [5.38]	0.156 [3.96]
26	0.290 [7.37]	0.212 [5.38]	0.156 [3.96]
34	0.417 [10.59]	0.303 [7.70]	0.220 [5.59]
41	0.290 [7.37]	0.212 [5.38]	0.156 [3.96]
50	0.417 [10.59]	0.303 [7.70]	0.220 [5.59]

ADD 0.030 [0.76] TO "B" DIMENSION WHEN MOUNTING BRACKET (LB) AND VIBRATION LOCK TAB (V) ARE USED IN COMBINATION ON CONNECTOR

(V) TAB NOT AVAILABLE ON SIZE 50

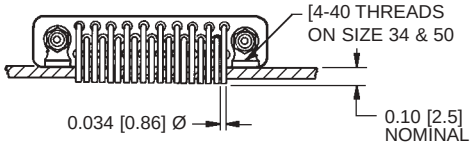

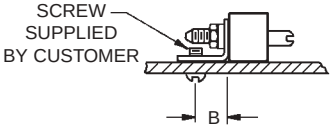

CONTACTS NOW SHOWN FOR CLARITY

STANDARD POSITION OF INSULATOR REQUIRES CONTACT "A" TO BE ADJACENT TO THE PRINTED BOARD

FOR FACE DIMENSIONS OF INSULATOR VARIANT DESIRED, SEE GM SERIES INSULATOR DIMENSION PAGE

RIGHT ANGLE PRINTED BOARD MOUNT CONNECTORS

FEMALE CONNECTOR

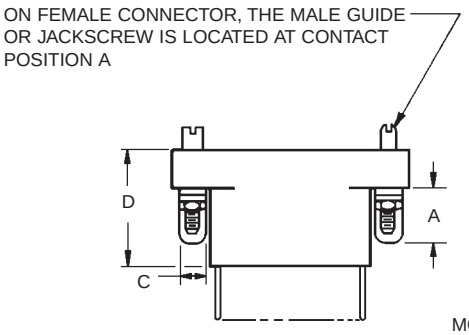

SIZE	A	B	C	D
9	0.290 [7.37]	0.212 [5.38]	0.156 [3.96]	0.856 [21.74]
14	0.290 [7.37]	0.212 [5.38]	0.156 [3.96]	0.877 [22.28]
18	0.290 [7.37]	0.212 [5.38]	0.156 [3.96]	0.877 [22.28]
20	0.290 [7.37]	0.212 [5.38]	0.156 [3.96]	0.856 [21.74]
26	0.290 [7.37]	0.212 [5.38]	0.156 [3.96]	0.877 [22.28]
34	0.417 [10.59]	0.303 [7.70]	0.220 [5.59]	0.856 [21.74]
41	0.290 [7.37]	0.212 [5.38]	0.156 [3.96]	0.877 [22.28]
50	0.417 [10.59]	0.303 [7.70]	0.220 [5.59]	0.856 [21.74]

ADD 0.030 [0.76] TO "B" DIMENSION WHEN MOUNTING BRACKET (LB) AND VIBRATION LOCK TAB (V) ARE USED IN COMBINATION ON CONNECTOR

(V) TAB NOT AVAILABLE ON SIZE 50

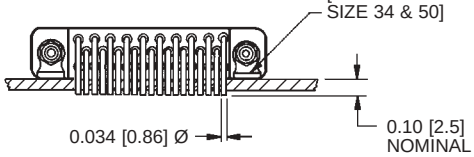

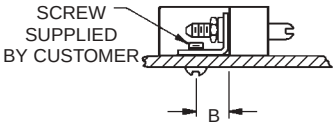

CONTACTS NOW SHOWN FOR CLARITY

STANDARD POSITION OF INSULATOR REQUIRES CONTACT "A" TO BE ADJACENT TO THE PRINTED BOARD

FOR FACE DIMENSIONS OF INSULATOR VARIANT DESIRED, SEE GMCT SERIES INSULATOR DIMENSION PAGE

CONTACT MATERIAL: COPPER ALLOY

CONTACT FINISH: GOLD FLASH OVER NICKEL

**DIMENSIONS ARE IN INCHES [MILLIMETERS].
ALL DIMENSIONS ARE SUBJECT TO CHANGE.**

Downloaded from Arrow.com.

HEAVY-DUTY RECTANGULAR RIGHT ANGLE PRINTED BOARD CONNECTORS

MALE RIGHT ANGLE PRINTED BOARD HOLE PATTERN

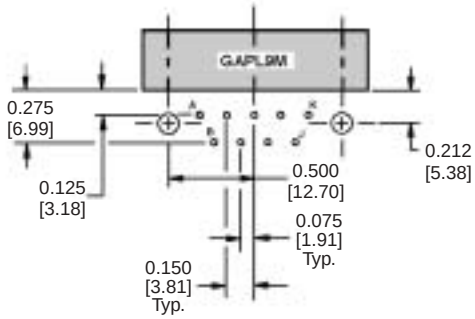

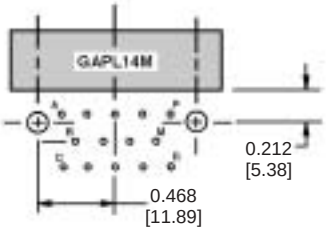

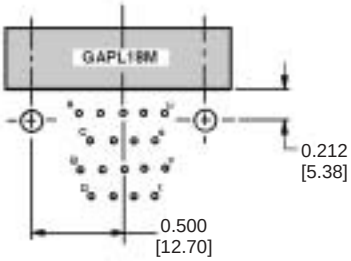

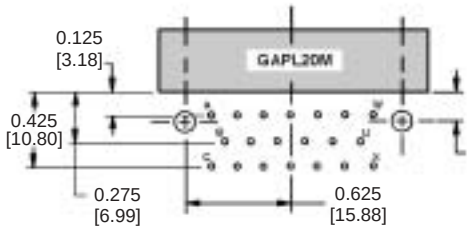

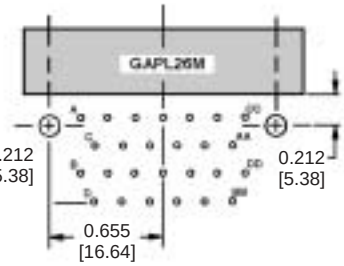

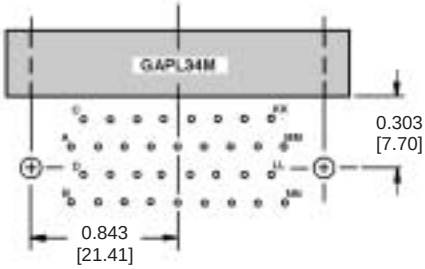

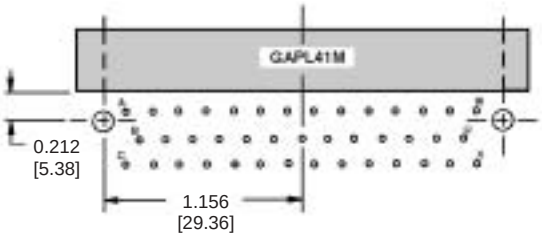

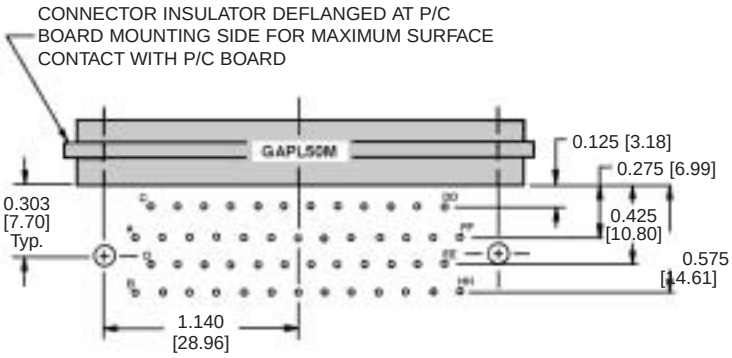

SUGGEST 0.109 [2.77] Ø HOLES IN PRINTED BOARD FOR CONNECTOR MOUNTING HOLES FOR VARIANTS 9, 14, 18, 20, 26 AND 41

SUGGEST 0.125 [3.18] Ø HOLES IN PRINTED BOARD FOR CONNECTOR MOUNTING HOLES FOR VARIANTS 34 AND 50

SUGGEST 0.052 [1.32] Ø HOLES IN PRINTED BOARD FOR CONTACT TERMINATIONS

ADD 0.030 [0.76] TO THE MOUNTING HOLE POSITION WHEN MOUNTING BRACKET (LB) AND VIBRATION LOCK TAB (V) ARE USED IN COMBINATION ON CONNECTOR

**DIMENSIONS ARE IN INCHES [MILLIMETERS].
ALL DIMENSIONS ARE SUBJECT TO CHANGE.**

Downloaded from Arrow.com.

FEMALE RIGHT ANGLE PRINTED BOARD HOLE PATTERN

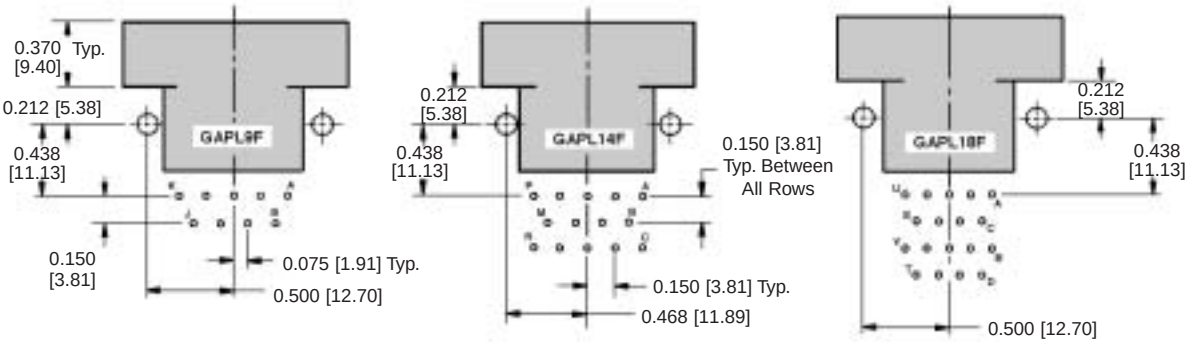

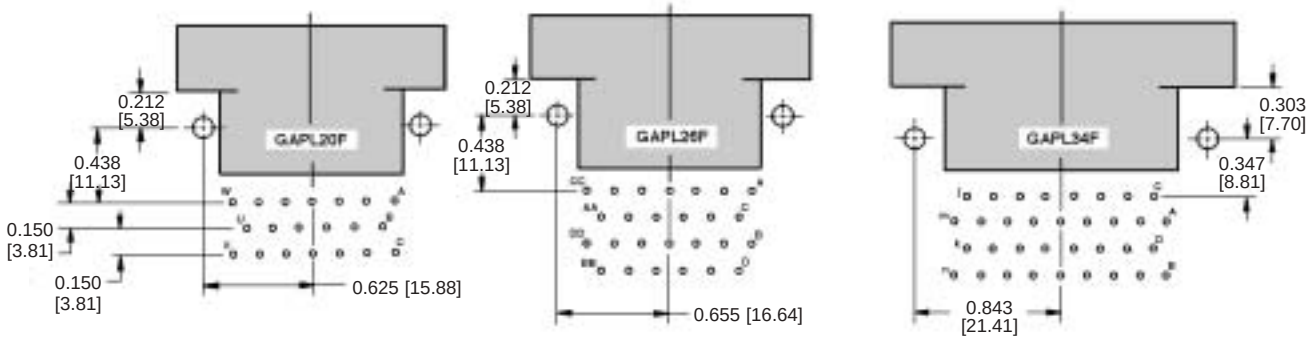

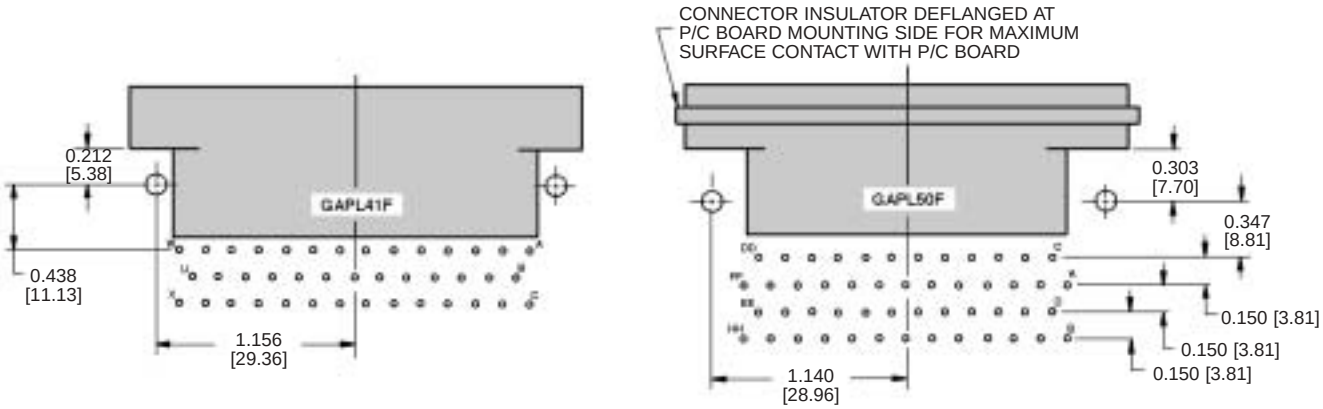

SUGGEST 0.109 [2.77] Ø HOLES IN PRINTED BOARD FOR CONNECTOR MOUNTING HOLES FOR VARIANTS 9, 14, 18, 20, 26 AND 41

SUGGEST 0.125 [3.18] Ø HOLES IN PRINTED BOARD FOR CONNECTOR MOUNTING HOLES FOR VARIANTS 34 AND 50

SUGGEST 0.052 [1.32] Ø HOLES IN PRINTED BOARD FOR CONTACT TERMINATIONS

ADD 0.030 [0.76] TO THE MOUNTING HOLE POSITION WHEN MOUNTING BRACKET (LB) AND VIBRATION LOCK TAB (V) ARE USED IN COMBINATION ON CONNECTOR

**DIMENSIONS ARE IN INCHES [MILLIMETERS].
ALL DIMENSIONS ARE SUBJECT TO CHANGE.**

Downloaded from Arrow.com.

HEAVY-DUTY RECTANGULAR RIGHT ANGLE PRINTED BOARD CONNECTORS

MOUNTING BRACKET

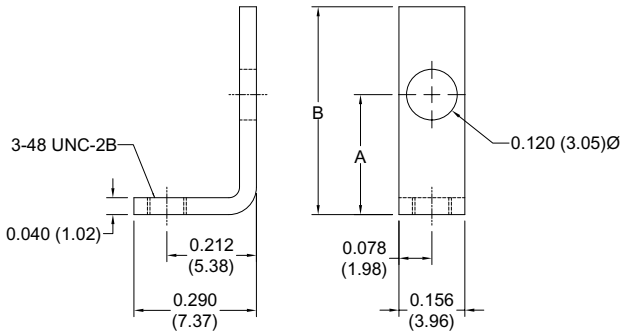

SIZE	A	B
9	0.188 [4.78]	0.299 [7.59]
14	0.219 [5.56]	0.330 [8.38]
18	0.284 [7.21]	0.395 [10.03]
20	0.219 [5.56]	0.330 [8.38]
26	0.284 7.21]	0.395 [10.03]
41	0.219 [5.556]	0.330 [8.38]

USE ON CONNECTOR VARIANTS 9, 14, 18, 20, 26 AND 41

MATERIAL: COPPER ALLOY
FINISH: ZINC PLATE WITH DICHROMATE SEAL

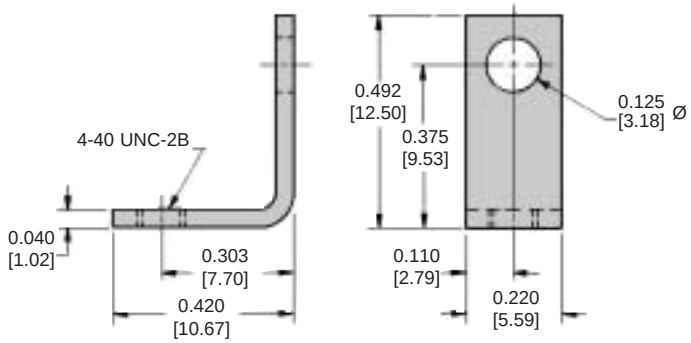

USE ON CONNECTOR VARIANTS 34 AND 50

MATERIAL: COPPER ALLOY
FINISH: ZINC PLATE WITH DICHROMATE SEAL

GAPL SERIES

PUSH-ON FASTENER FOR RIVETED ON RIGHT ANGLE MOUNTING BRACKETS

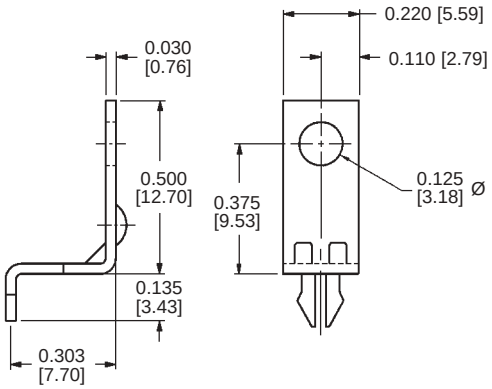

LN2

MATERIAL: COPPER ALLOY, TIN PLATE

SUGGEST 0.123 ±0.003 [3.12] Ø HOLE FOR MOUNTING CONNECTOR WITH PUSH-ON FASTENER

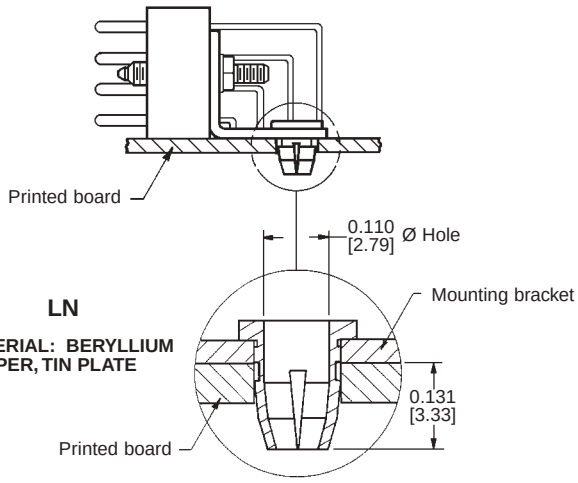

LN

MATERIAL: BERYLLIUM COPPER, TIN PLATE

SAMPLE #	PRINTED BRD. HOLE Ø	INSERTION FORCE (lbs.)	RETENTION FORCE (lbs.)
1	0.120 [3.05]	7 1/4	5 3/4
2	0.123 [3.12]	5 3/4	5 1/2
3	0.125 [3.18]	2 3/4	2 1/2
4	0.128 [3.25]	1 3/4	2 1/4
5	0.126 [3.20] PLATED	1 3/4	2 1/4

DIMENSIONS ARE IN INCHES [MILLIMETERS].
ALL DIMENSIONS ARE SUBJECT TO CHANGE.

Downloaded from Arrow.com.

ORDERING INFORMATION – CODE NUMBERING SYSTEM

Specify Complete Connector By Following Steps 1 Through 7
Insert "0" When Step Is Not Used

STEP	1	2	3	4	5	6	7	—	8
	GAPL	14	M	0	N	V	LB		

STEP 1 - Basic Series
GAPL Series.

STEP 2 -
GAPL Series Connector Variants
9, 14, 18, 20, 26, 34, 41, 50

STEP 3 - Connector Gender
M - Male insulator.
F - Female insulator.

STEP 4 - Contact Type
0 - Standard termination.

***STEP 5 - Polarizing Guides and Jackscrew System**
G - Polarizing grounding guides.
N - Polarizing guides.
NSS - Stainless steel polarizing guides.
T - Fixed jackscrews.
0 - If no polarizing guides or jackscrews are required.

***STEP 6 - Locking Devices**
V - Lock tab.
VL - Lock lever.
0 - If no locking devices are required.

STEP 7 - Mounting Bracket
LB - Mounting bracket.
0 - If no mounting bracket is required.
LN - Mounting bracket with push-on fastener, offered on size 34 and 50 only.
LN2 - Mounting bracket with push-on fastener, offered on size 34 and 50 only.

*** NOTE: FOR DETAILS OF ITEMS LISTED IN STEPS 5 AND 6, SEE HEAVY-DUTY RECTANGULAR CONNECTOR ACCESSORIES SECTION.**

DIMENSIONS ARE IN INCHES [MILLIMETERS].
ALL DIMENSIONS ARE SUBJECT TO CHANGE.

Downloaded from Arrow.com.

HEAVY-DUTY RECTANGULAR CCITT V.35 INTERFACE CONNECTORS

Size 16 Contacts Connectors Qualified to MIL-DTL-28748

Contacts Qualified to MIL-C-39029

IEC Publication 807-7 ISO International Standard 2593

U.L. Recognized, File #E49351
Telecommunication U.L. File #E140980

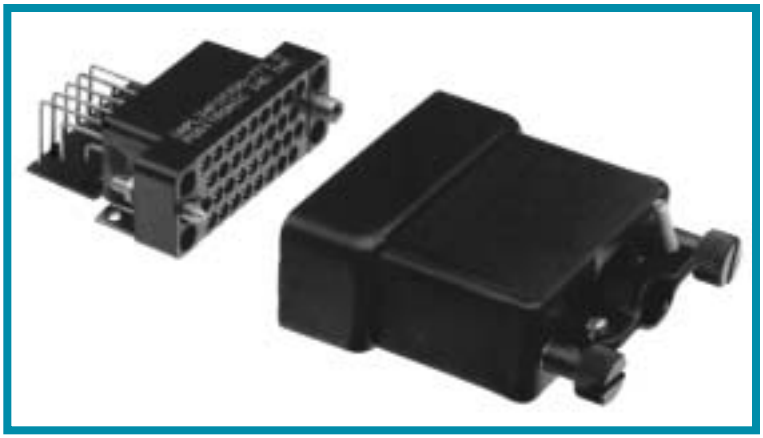

VMCT and VAPL series connectors are high reliability connectors meeting international standards for CCITT V.35 interfacing. To meet these specifications, VMCT and VAPL series connectors come in 34 position glass filled DAP insulators with 0.062 inch [1.57mm] diameters, size 16 contacts rated to 13 amperes.

VMCT Series connectors are offered in crimp, solder cup, printed board mount, press-fit and wrap post terminations. VAPL Series connectors have right angle printed board mount terminations. VMCT and VAPL series connectors meet performance requirements for MIL-DTL-28748 and MIL-C-39029.

A wide array of mounting, locking, shrouding and polarizing accessories is available for these connectors. For details, see the Heavy-Duty Rectangular Connector Accessories section, GMCT 34 variant.

VMCT and VAPL series connectors were specifically designed to satisfy requirements for V.35 interfacing and high speed data transmission found in the telecommunications, modem and computer industries. These connectors fully comply with the contact and jackscrew system requirements of ISO standard 2593, as revised by ISO TC 97/SC6 N 2599 and 3236.

V.35 SERIES TECHNICAL CHARACTERISTICS

VMCT SERIES CONNECTORS WITH REMOVABLE CONTACTS

MILITARY SPECIFICATIONS:

Qualified to MIL-DTL-28748/3 and MIL-DTL-28748/4. Contacts qualified to MIL-C-39029/34 and MIL-C-39029/35.

INTERNATIONAL STANDARDS:

IEC 807-1 and IEC 807-7.
U.L. Recognized.

MATERIALS AND FINISHES:

Insulator: Glass filled DAP per ASTM-D-5948 type SDG-F. Grey color is standard, black available.

Removable Contacts: Copper alloy with gold flash over nickel. Military contacts plated 0.000050 inch [1.27 microns] gold over copper. Other finishes available upon request.

Hoods, Cable Adapters: Aluminum with yellow or black anodize. Steel with zinc plate and dichromate seal.

Shells: Aluminum with yellow or black anodize.

Jackscrew System: Passivated stainless steel.

Polarizing Guides: Copper alloy with nickel plate or passivated stainless steel.

Vibration Locks: Copper alloy with zinc plate and dichromate seal.

MECHANICAL CHARACTERISTICS:

Removable Contacts: Insert contact to rear face of insulator, release from front face of insulator. Size 16 [13 amps.] contacts available. Female contact has “closed entry” design for highest reliability.

Contact Retention in Insulator: 20 lbs. [89N] after 10 cycles of contact insertion extraction.

Contact Termination: Crimp all wire sizes from 14 AWG [2.5 mm^2] through 32 AWG [0.03 mm^2]. Solder cup, wrap post, press-fit and printed board mount.

Locking Systems: Friction, vibration locks and jackscrews.

Polarization: Polarized guides, polarized shells and jackscrew system.

Mechanical Operations: 1000 operations per IEC 512-5.

Jackscrews: Standard threads, 6-32 UNC. Metric threads, M3X0.5 available.

ELECTRICAL CHARACTERISTICS:

Contact Current Rating: Size 16: 0.062 inch [1.57 mm] diameter – 13 amps nominal.

Initial Contact Resistance: Size 16 – 0.003 ohms.

Flash over Voltage: 2700 V.AC [rms].

Test Voltage: Size 16 – 2000 V.AC [rms].

Insulation Resistance (minimum): 5 G ohms.

Clearance and Creepage Distance (minimum): 0.080 inch [2.03 mm].

Working Temperature: -55°C to 125°C.

Working Voltage: 250 V.AC [rms].

Downloaded from Arrow.com.

VAPL SERIES TECHNICAL CHARACTERISTICS

MILITARY SPECIFICATIONS:

Conforms to MIL-DTL-28748.

INTERNATIONAL STANDARDS:

IEC 807-1 and IEC 807-7.
U.L. Recognized.

MATERIALS AND FINISHES:

Insulator:	Glass filled DAP per ASTM-D-5948 type SDG-F. Grey color is standard, black available.
Fixed Contacts:	Copper alloy, gold flash over nickel.
Jackscrew System:	Passivated stainless steel.
Polarizing Guides:	Copper alloy with nickel plate or passivated stainless steel.
Vibration Locks:	Copper alloy with zinc plate and dichromate seal.

MECHANICAL CHARACTERISTICS:

Fixed Contacts:	**Male** – Size 16: 0.062 inch [1.57 mm] diameter. **Female** – "Closed entry" design for highest reliability.
Contact Retention in Insulator:	10 lbs. [44.5N] minimum.
Contact Termination:	Right angle printed board mounted.
Locking Systems:	Friction, vibration locks and jackscrews.
Polarization:	Polarized guides and jackscrew system.
Mechanical Operations:	1000 operations per IEC 512-5.
Jackscrews:	Standard threads, 6-32 UNC. Metric threads, M3X0.5 available.

ELECTRICAL CHARACTERISTICS:

Contact Current Rating:	7.5 amps. limited at contact termination diameter.
Initial Contact Resistance:	0.003 ohms.
Flash over Voltage:	2500 V.AC [rms].
Test Voltage:	1200 V.AC [rms].
Insulation Resistance (minimum):	5 G ohms.
Clearance and Creepage Distance (minimum):	0.047 inch [1.19 mm].
Working Temperature:	-55°C to 125°C.
Working Voltage:	250 V.AC [rms].

VMCT/VAPL SERIES TYPICAL CONNECTOR MATING ASSEMBLY

SEE PAGE 57 FOR EMI/RFI SHIELDED HOOD ASSEMBLY.

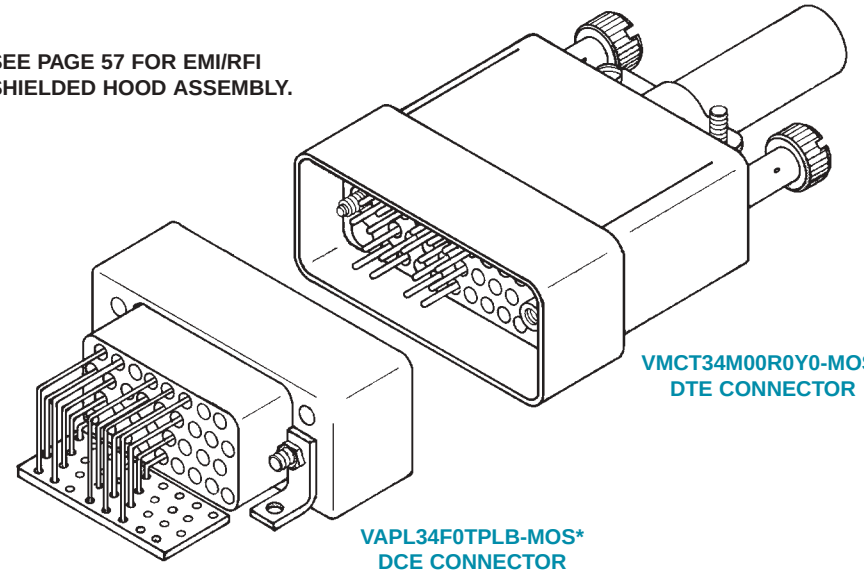

* MOS DESIGNATES THE NUMBERING SYSTEM FOR SPECIAL CUSTOMER REQUIREMENTS. SELECTIVE LOADING OF CONTACTS FOR V.35 CONNECTORS IS ACHIEVED THROUGH THIS SYSTEM. PLEASE CONTACT TECHNICAL SALES FOR DETAILS.

DIMENSIONS ARE IN INCHES [MILLIMETERS].
ALL DIMENSIONS ARE SUBJECT TO CHANGE.

Downloaded from Arrow.com.

VMCT SERIES CONNECTOR INSULATOR DIMENSIONS

FEMALE CONNECTOR

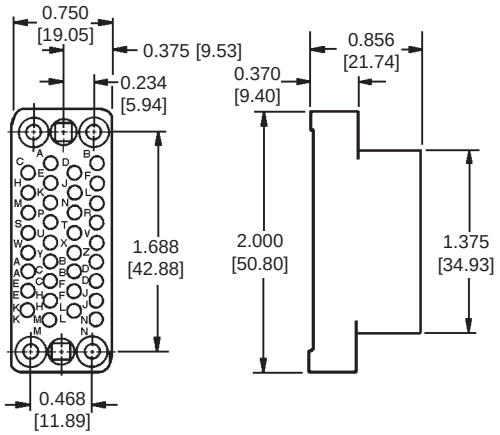

MALE CONNECTOR

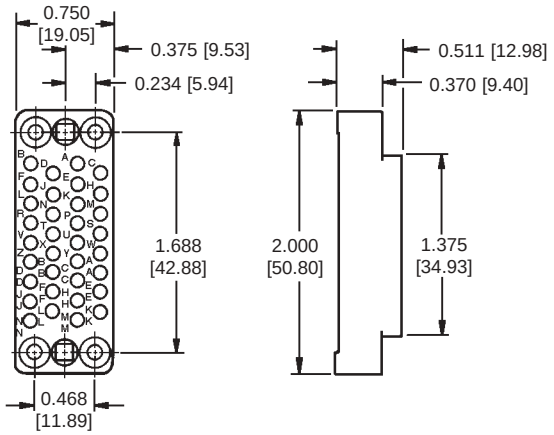

FOR VMCT [V.35] SERIES CONTACTS, SEE GMCT SERIES CONTACT SECTION

FOR VMCT SERIES CONTACT HOLE POSITIONS, SEE GMCT SERIES CONTACT HOLE POSITIONS, PAGE 7

MATERIAL: GLASS FILLED DIALLYL PHTHALATE PER ASTM-D-5948 TYPE SDG-F

VAPL SERIES RIGHT ANGLE PRINTED BOARD MOUNT CONNECTORS

FEMALE CONNECTOR

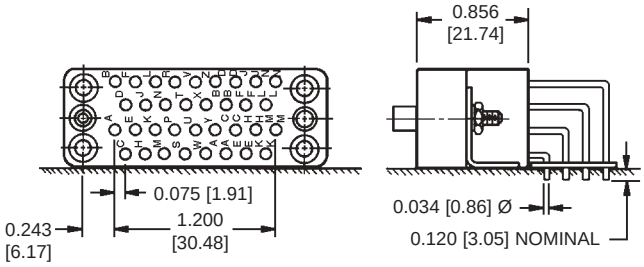

MALE CONNECTOR

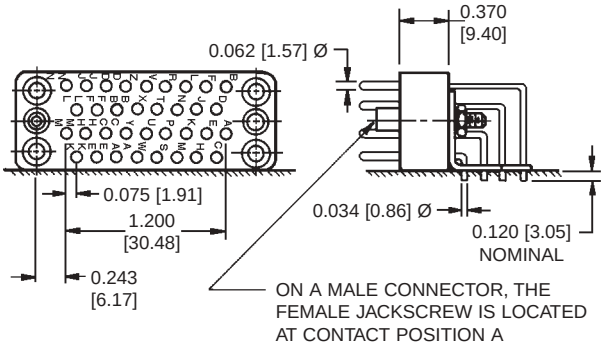

VAPL SERIES RIGHT ANGLE PRINTED BOARD HOLE PATTERN

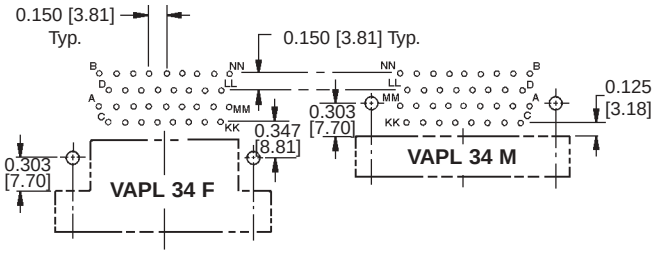

FOR MOUNTING BRACKET DIMENSIONS SEE GAPL SERIES, GAPL 34 VARIANT, PAGE 30

SUGGEST 0.052 [1.32] Ø HOLES IN PRINTED BOARD FOR CONTACT TERMINATIONS

SUGGEST 0.125 [3.18] Ø HOLES IN PRINTED BOARD FOR CONNECTOR MOUNTING HOLES

**DIMENSIONS ARE IN INCHES [MILLIMETERS].
ALL DIMENSIONS ARE SUBJECT TO CHANGE.**

**DIMENSIONS ARE IN INCHES [MILLIMETERS].
ALL DIMENSIONS ARE SUBJECT TO CHANGE.**

Downloaded from Arrow.com.

HEAVY-DUTY RECTANGULAR CCITT V.35 INTERFACE CONNECTORS

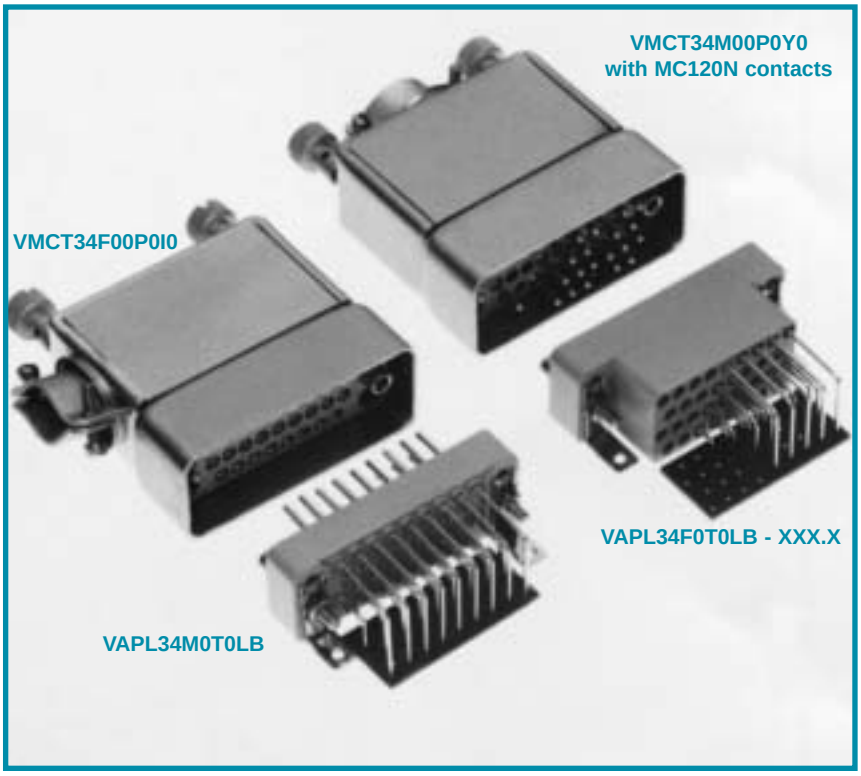

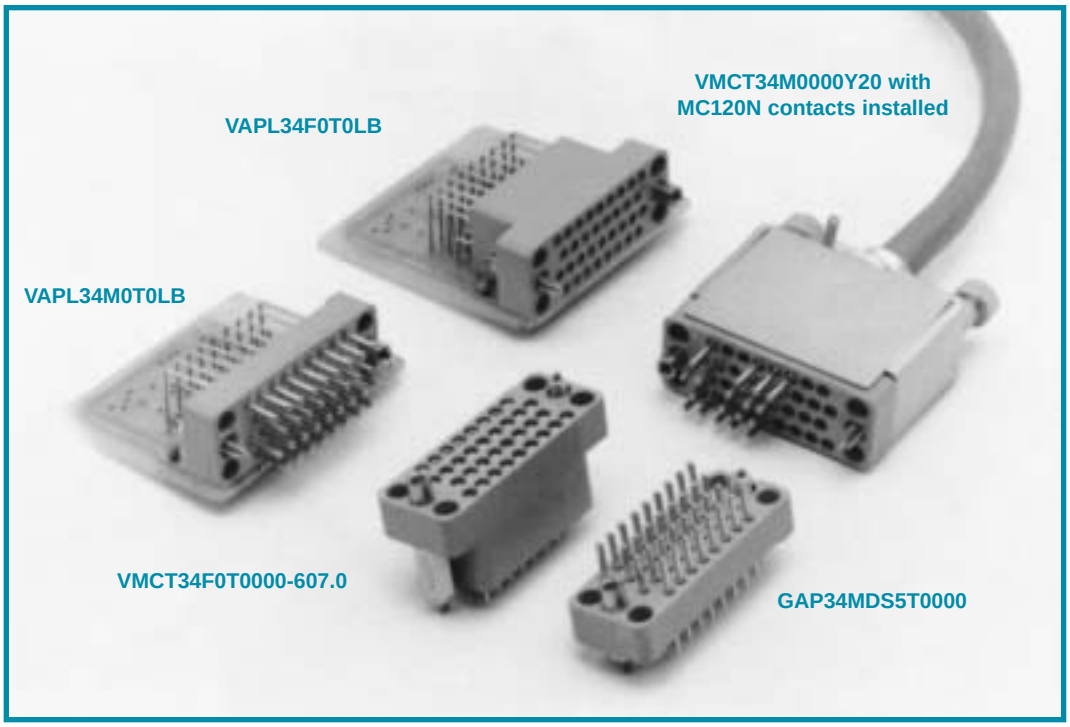

DIMENSIONS ARE IN INCHES [MILLIMETERS].
ALL DIMENSIONS ARE SUBJECT TO CHANGE.

Downloaded from Arrow.com.

HEAVY-DUTY RECTANGULAR CCITT V.35 INTERFACE CONNECTORS

ORDERING INFORMATION – CODE NUMBERING SYSTEM

Specify Complete Connector By Following Steps 1 Through 9
Insert "0" When Step Is Not Used

VMCT SERIES

STEP	1	2	3	4	5	6	7	8	9	—	10
	VMCT	34	F	0	0	R	B	Z	0		

STEP 1 - Basic Series
VMCT Series (V.35).

STEP 2 - VMCT Series 34 Connector Variant

STEP 3 - Connector Gender
M - Male insulator.
F - Female insulator.

STEP 4 - Contact Termination Type
All Female contacts "closed entry" design.
0 - Contacts are to be ordered separately, see contact ordering charts.

***STEP 5 - Polarizing Guides and Jackscrew System**
G - Polarizing grounding guides.
N - Polarizing guides.
NSS - Stainless steel polarizing guides.
T - Fixed jackscrews.
E - Short turnable jackscrews, offered with set screw option.
EL - Long turnable jackscrews, offered with set screw option.
0 - If no polarizing guides or jackscrews are required. Also, use "0" if ordering hoods equipped with jackscrews, see STEP 8.

***STEP 6 - Shells and Mounting Plates**
P - Male shell.
R - Female shell.
H - Mounting plate.
W - Male shell with mounting plate.
U - Female shell with mounting plate.
0 - If no shells or mounting plates are required.

***STEP 7 - Polarization Positions of Shells**
Select letter to designate position of male pin and female slot for polarization system.
A, B, C, D, E, F, G
0 - If no polarization is required or if no shells are required.

***STEP 8 - Cable Adapters [Hoods]**
J - Top opening hood (formed).
L - Side opening hood (formed).
Y - Top opening hood (formed), equipped with stainless steel jackscrew system.
I - Side opening hood (formed), equipped with stainless steel jackscrew system.
Z - Top opening hood (drawn, side access), equipped with stainless steel jackscrew system.
V - Side opening hood (drawn, side access), equipped with stainless steel jackscrew system.
0 - If no hoods are required.

***STEP 9 - Additional Options**
B - For black anodized aluminum parts.
C - Set screw option, offered on the E and EL jackscrew systems.
R - For yellow chromate coating on aluminum parts.
V - Lock tab.
VL - Lock lever.
FB - Floating bushings for mounting plate.
0 - If no additional options are required.

*** NOTE: FOR DETAILS OF ITEMS LISTED IN STEPS 5 THROUGH 9, SEE HEAVY-DUTY RECTANGULAR CONNECTOR ACCESSORIES SECTION, GMCT 34 VARIANT.**

Downloaded from Arrow.com.

ORDERING INFORMATION – CODE NUMBERING SYSTEM

Specify Complete Connector By Following Steps 1 Through 7
Insert "0" When Step Is Not Used

VAPL SERIES

STEP	1	2	3	4	5	6	7	—	8
	VAPL	34	F	0	T	0	LB		

STEP 1 - Basic Series
VAPL Series (V.35).

STEP 2 -
VAPL Series 34 Connector Variant

STEP 3 - Connector Gender
M - Male insulator.
F - Female insulator.

STEP 4 - Contact Type
0 - Standard termination.

STEP 7 - Mounting Bracket
LB - Mounting bracket.
0 - If no mounting bracket is required.
LN - Mounting bracket with push-on fastener.
LN2 - Mounting bracket with one-piece bracket and push-on fastener.

***STEP 6 - Locking Devices**
V - Lock tab.
VL - Lock lever.
0 - If no locking devices are required.

***STEP 5 - Polarizing Guides and Jackscrew System**
G - Polarizing grounding guides.
N - Polarizing guides.
NSS - Stainless steel polarizing guides.
T - Fixed jackscrews.
0 - If no polarizing guides or jackscrews are required.

*** NOTE: FOR DETAILS OF ITEMS LISTED IN STEPS 5 AND 6, SEE HEAVY-DUTY RECTANGULAR CONNECTOR ACCESSORIES SECTION, GMCT 34 VARIANT.**

FOR MOUNTING BRACKET DIMENSIONS, SEE GAPL SERIES, GAPL 34 VARIANT

DIMENSIONS ARE IN INCHES [MILLIMETERS].
ALL DIMENSIONS ARE SUBJECT TO CHANGE.

Downloaded from Arrow.com.

RECTANGULAR CONNECTORS WITH FIXED SOLDER CONTACTS

Size 20 Contacts

Qualified to MIL-DTL-28748

IEC Publication 807-6

U.L. Recognized
File #E49351

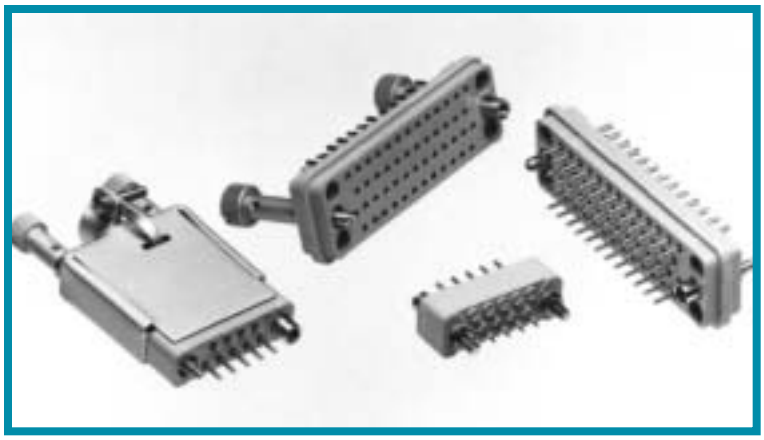

GM Series connectors are multi-pole, high reliability connectors qualified to MIL-DTL-28748 specifications. Contacts are 0.040 inch [1.02mm] diameters, rated to 7.5 amperes per contact. Termination styles are solder cup and straight solder printed board mount. Eleven connector variants, seven through 50 poles, are offered.

A wide array of mounting, locking, shrouding and polarizing accessories is available for this series. For details, see the Heavy-Duty Rectangular Connector Accessories section.

The GM Series is a popular choice of engineers in all areas of electronics and is widely utilized in navigational systems, robotics, mainframe and peripheral computers, medical equipment, telecommunications, instrumentation and process control applications.

GM Series connectors may not be mateable with GMCT Series connectors and contacts, contact Technical Sales.

GM SERIES TECHNICAL CHARACTERISTICS

MILITARY SPECIFICATIONS:

Qualified to MIL-DTL-28748/5 and MIL-DTL-28748/6.

INTERNATIONAL STANDARDS:

IEC 807-6.
U.L. Recognized.

MATERIALS AND FINISHES:

Insulator:	Glass filled DAP per ASTM-D-5948 type SDG-F. Grey color is standard, black available.
Fixed Contacts:	**Solder** - Copper alloy, gold flash over nickel. **Printed Board Mounted** - Copper alloy, gold flash over nickel. **Military** - Copper alloy, 0.000050 inch [1.27 microns] gold over nickel. Other finishes available upon request.
Hoods, Cable Adapters:	Aluminum with yellow or black anodize.
Shells:	Aluminum with yellow or black anodize.
Jackscrew System:	Passivated stainless steel.
Polarizing Guides:	Copper alloy with nickel plate or passivated stainless steel.
Vibration Locks:	Copper alloy with zinc plate and dichromate seal.

MECHANICAL CHARACTERISTICS:

Fixed Contacts:	**Male** - Size 20: 0.040 inch [1.02 mm^2] diameter. **Female** - Open entry is standard. "Closed entry" available on solder cup style for high reliability applications.
Contact Retention in Insulator:	10 lbs. [44.5N] minimum.
Contact Termination:	0.046 inch [1.17 mm] internal diameter on solder cup style contact for 20 AWG [0.5 mm^2] wire maximum. 0.025 inch [0.64 mm] diameter printed board mount style contact.
Locking Systems:	Friction, vibration locks and jackscrews.
Polarization:	Polarized guides, polarized shells and jackscrew system.
Mechanical Operations:	With "closed entry" female contacts, 500 operations per IEC 512-5.
Jackscrews:	Standard threads, 6-32 UNC. Metric threads, M3X0.5 available.

ELECTRICAL CHARACTERISTICS:

Contact Current Rating (maximum):	7.5 amps.
Initial Contact Resistance:	0.010 ohms.
Flash over Voltage:	2500 V.AC [rms].
Test Voltage:	1200 V.AC [rms].
Insulation Resistance (minimum):	5 G ohms.
Clearance and Creepage Distance (minimum):	0.047 inch [1.19 mm].
Working Temperature:	-55°C to 125°C.
Working Voltage:	300 V.AC [rms].

DIMENSIONS ARE IN INCHES [MILLIMETERS].
ALL DIMENSIONS ARE SUBJECT TO CHANGE.

Downloaded from Arrow.com.

SOLDER CUP CONTACTS

CONTACT MATERIAL: COPPER ALLOY

CONTACT FINISH: GOLD FLASH OVER NICKEL
"CLOSED ENTRY" FEMALE CONTACT AVAILABLE

SPECIFY CODE "CE" IN STEP 10 OF ORDERING INFORMATION

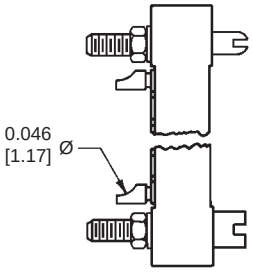

Typical Part Number: GM14FSCN0000

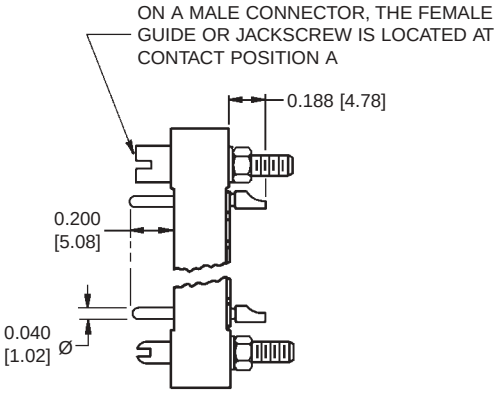

Typical Part Number: GM14MSCN0000

STRAIGHT SOLDER CONTACTS FOR PRINTED BOARD MOUNT

CONTACT MATERIAL: COPPER ALLOY

CONTACT FINISH: GOLD FLASH OVER NICKEL

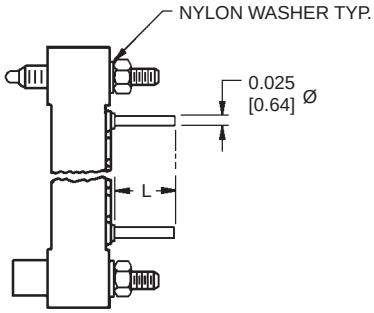

Typical Part Number: GM34FDS5T0000

CONTACT CODE	L
DS3	0.093 [2.36]
DS4	0.125 [3.18]
DS5	0.156 [3.96]
DS6	0.187 [4.75]

SEE GM SERIES PRINTED BOARD HOLE PATTERN PAGE FOR CONNECTOR VARIANT CONTACT HOLE POSITIONS

SPECIFY CONTACT CODE IN STEP 4 OF ORDERING INFORMATION FOR DESIRED LENGTH OF CONTACT TERMINATION

TYPICAL MATING ASSEMBLY

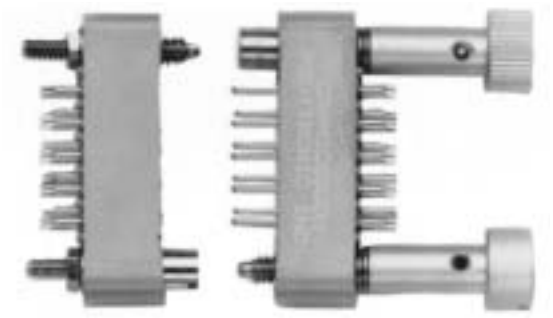

GM9FSCT0000 **GM9MSCE0000**

**DIMENSIONS ARE IN INCHES [MILLIMETERS].
ALL DIMENSIONS ARE SUBJECT TO CHANGE.**

Downloaded from Arrow.com.

INSULATOR DIMENSIONS

MATING FACE OF FEMALE CONNECTOR OR REAR FACE OF MALE CONNECTOR

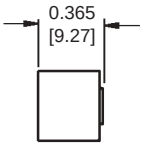

MALE AND FEMALE
PROFILE VIEW

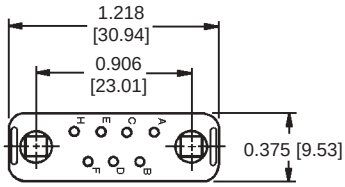

GM7

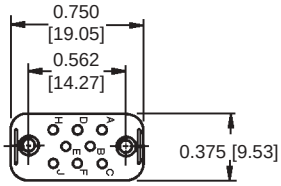

GM8

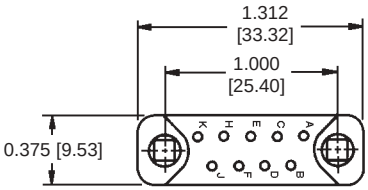

GM9

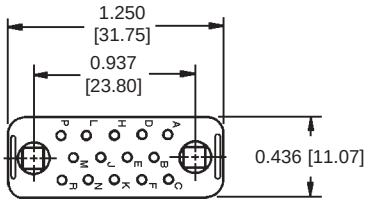

GM14

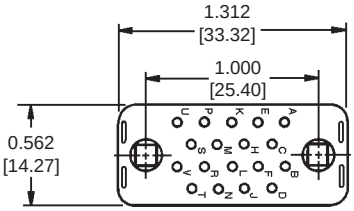

GM18

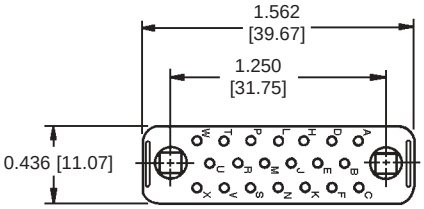

GM20

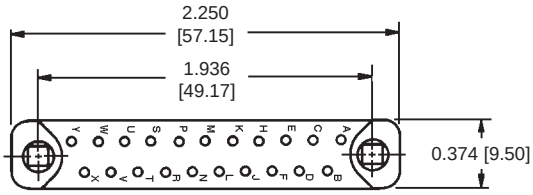

GM21

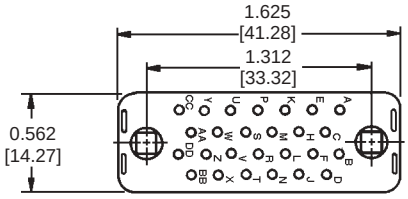

GM26

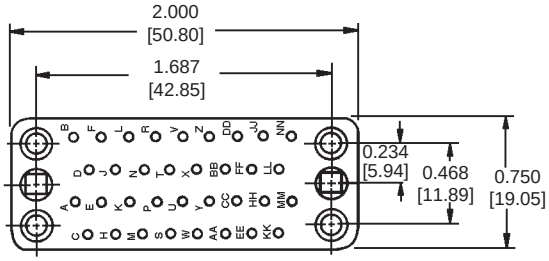

GM34

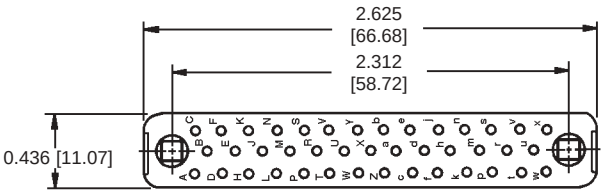

GM41

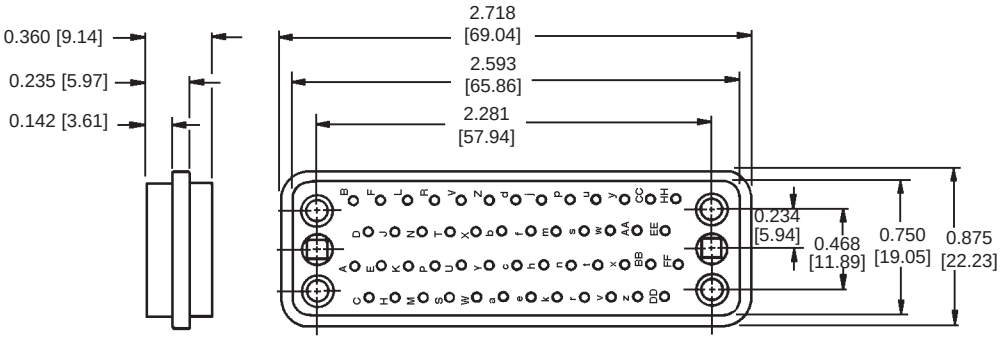

GM50

SEE GM SERIES PRINTED BOARD HOLE PATTERN PAGE FOR CONNECTOR VARIANT CONTACT HOLE POSITIONS

MATERIAL: GLASS FILLED DIALLYL PHTHALATE PER ASTM-D-5948 TYPE SDG-F

DIMENSIONS ARE IN INCHES [MILLIMETERS].
ALL DIMENSIONS ARE SUBJECT TO CHANGE.

Downloaded from Arrow.com.

CONTACT HOLE POSITION DIMENSIONS AND PRINTED BOARD HOLE PATTERN

MATING FACE OF FEMALE CONNECTOR OR REAR FACE OF MALE CONNECTOR

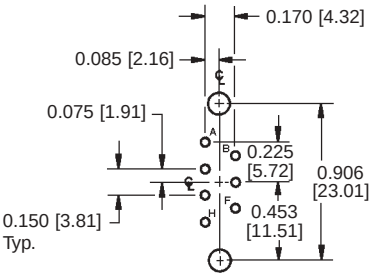

SIZE 7

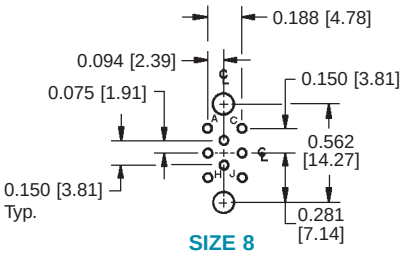

SIZE 8

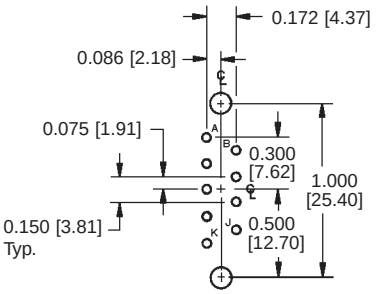

SIZE 9

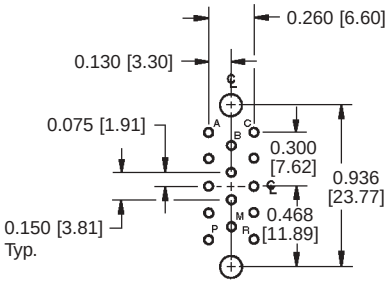

SIZE 14

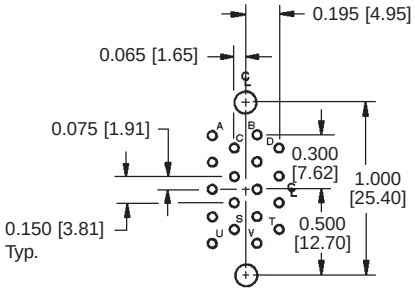

SIZE 18

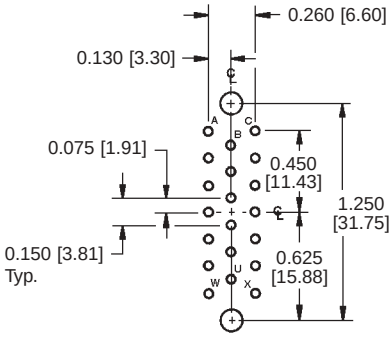

SIZE 20

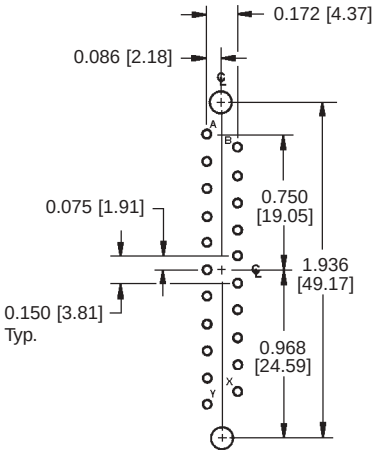

SIZE 21

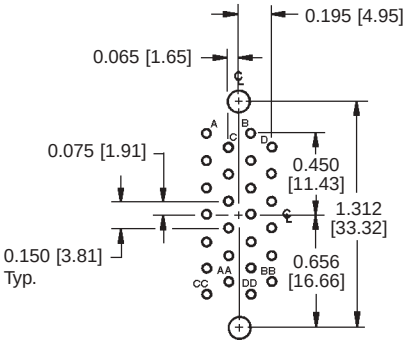

SIZE 26

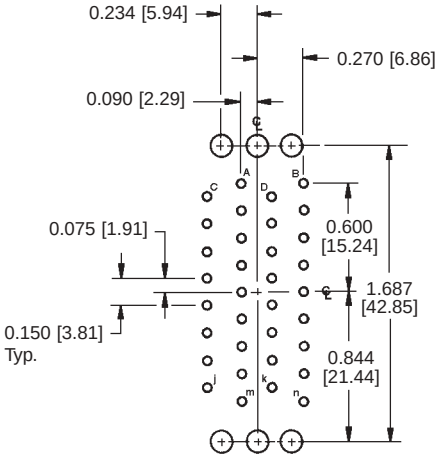

SIZE 34

SUGGEST 0.120 [3.05] Ø HOLES IN PRINTED BOARD FOR CONNECTOR MOUNTING HOLES
SUGGEST 0.040 [1.02] Ø HOLE IN PRINTED BOARD FOR CONTACT TERMINATIONS

HOLE IDENTIFICATION FOR REFERENCE ONLY

DIMENSIONS ARE IN INCHES [MILLIMETERS].
ALL DIMENSIONS ARE SUBJECT TO CHANGE.

Downloaded from Arrow.com.

CONTACT HOLE POSITION DIMENSIONS AND PRINTED BOARD HOLE PATTERN

MATING FACE OF FEMALE CONNECTOR OR REAR FACE OF MALE CONNECTOR

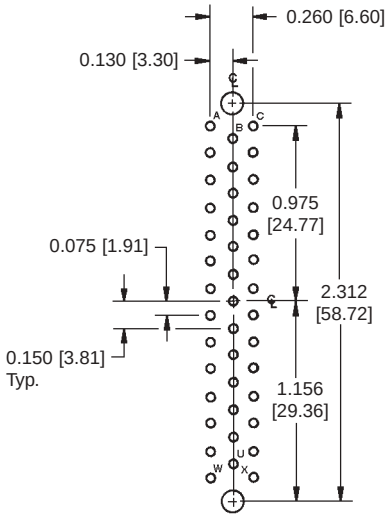

SIZE 41

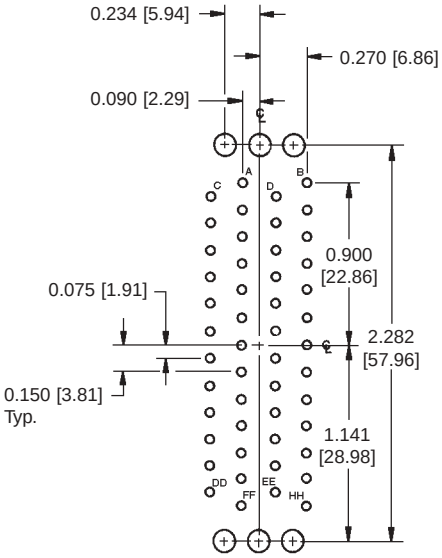

SIZE 50

SUGGEST 0.120 [3.05] Ø HOLES IN PRINTED BOARD FOR CONNECTOR MOUNTING HOLES

SUGGEST 0.040 [1.02] Ø HOLE IN PRINTED BOARD FOR CONTACT TERMINATIONS

HOLE IDENTIFICATION FOR REFERENCE ONLY

TYPICAL MATING ASSEMBLY

GM41MSCE100J0

GMPL41F0T00

DIMENSIONS ARE IN INCHES [MILLIMETERS].
ALL DIMENSIONS ARE SUBJECT TO CHANGE.

Downloaded from Arrow.com.

ORDERING INFORMATION – CODE NUMBERING SYSTEM

Specify Complete Connector By Following Steps 1 Through 9
Insert "0" When Step Is Not Used

STEP	1	2	3	4	5	6	7	8	9	—	10
	GM	41	M	SC	E1	0	0	J	0		

STEP 1 - Basic Series
GM Series.

STEP 2 -
GM Series Connector Variants
7, 8, 9, 14, 18, 20, 21, 26, 34, 41, 50

STEP 3 - Connector Gender
M - Male insulator.
F - Female insulator.

STEP 4 - Contact Termination Type
SC - Solder cup, for closed entry female contact specify 'CE' in Step 10.
DS3 - Straight solder (0.093 [2.36]).
DS4 - Straight solder (0.125 [3.18]).
DS5 - Straight solder (0.156 [3.96]).
DS6 - Straight solder (0.187 [4.75]).

***STEP 5 - Polarizing Guides and Jackscrew System**
G - Polarizing grounding guides.
N - Polarizing guides, only option offered for size 8 connectors
NSS - Stainless steel polarizing guides.
T - Fixed jackscrews.
E - Short turnable jackscrews, offered with set screw option.
EL - Long turnable jackscrews, offered with set screw option.
E1 - Turnable jackscrews used on 9, 14, 18, 20, 21, 26 and 41 variant hoods, offered with set screw option.
0 - If no polarizing guides or jackscrews are required. Also, use "0" if ordering hoods equipped with jackscrews for sizes 34 and 50, see Step 8.

***STEP 6 - Shells and Mounting Plates**
P - Male shell, not available on 41 variant.
R - Female shell, not available on 41 variant.
H - Mounting plate, not available on 41 variant.
W - Male shell with mounting plate.
U - Female shell with mounting plate.
0 - If no shells or mounting plates are required.

***STEP 7 - Polarization Positions of Shells**
Select letter to designate position of male pin and female slot for polarization system.
A, B, C, D, E, F, G
0 - If no polarization is required or if no shells are required.

***STEP 8 - Cable Adapters [Hoods]**
J - Top opening hood (formed).
L - Side opening hood (formed).
Y - Top opening hood (formed), equipped with stainless steel jackscrew system, offered on 34 and 50 variants.
I - Side opening hood (formed), equipped with stainless steel jackscrew system, offered on 34 and 50 variants.
Z - Top opening hood (drawn, side access), equipped with stainless steel jackscrew system, offered on 34 and 50 variants.
V - Side opening hood (drawn, side access), equipped with stainless steel jackscrew system, offered on 34 and 50 variants.
0 - If no hoods are required.

***STEP 9 - Additional Options**
B - For black anodized aluminum parts.
C - Set screw option, offered on the E, EL and E1 jackscrew systems.
R - For yellow chromate coating on aluminum parts.
V - Lock tab, offered on 7, 9, 14, 18, 20, 21, 26, 34 and 41 variants.
VL - Lock lever, offered on 7, 9, 14, 18, 20, 21, 26, 34 and 41 variants.
0 - If no additional options are required.

*** NOTE: FOR DETAILS OF ITEMS LISTED IN STEPS 5 THROUGH 9, SEE HEAVY-DUTY RECTANGULAR CONNECTOR ACCESSORIES SECTION.**

DIMENSIONS ARE IN INCHES [MILLIMETERS].
ALL DIMENSIONS ARE SUBJECT TO CHANGE.

Downloaded from Arrow.com.

HEAVY-DUTY RECTANGULAR CONNECTORS FOR GMCT, GAP, GAPL, VMCT, VAPL, GM AND GMPL SERIES

VIBRATION LOCKS (V,VL)

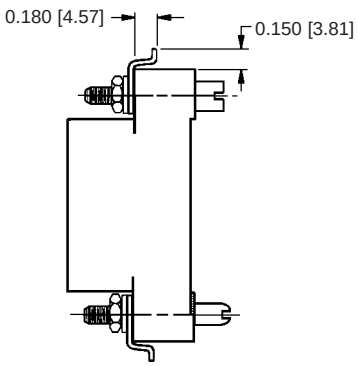

(V) - VIBRATION TABS

Typical Part Number:
GMCT34F0N000V

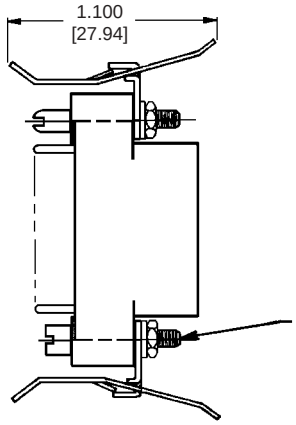

(VL) - VIBRATION LEVER ASSEMBLY

Typical Part Number:
GMCT34M0N000VL

SPECIFY CODE "V" OR "VL" IN STEP 9 OF ORDERING INFORMATION

MATERIAL: COPPER ALLOY

FINISH: ZINC PLATE WITH DICHRO-MATE SEAL

ON MALE CONNECTOR THE FEMALE GUIDE OR JACKSCREW IS LOCATED AT CONTACT POSITION A OR NO. 1

TYPICAL MATING ASSEMBLY

GAPL14M0NVLB **GMCT14F0N00JVL**

FLUSH PANEL CONNECTOR MOUNTING BRACKETS

MATERIAL: COPPER ALLOY

FINISH: ZINC WITH DICHROMATE SEAL

CONNECTOR VARIANTS	PART NUMBER
7 THRU 75	80023-2
104	80023-4

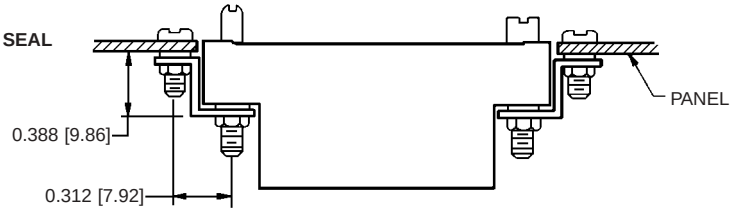

DIMENSIONS ARE IN INCHES [MILLIMETERS].
ALL DIMENSIONS ARE SUBJECT TO CHANGE.

Downloaded from Arrow.com.

JACKSCREW SYSTEM DIMENSIONS (T, E, EL, ESS)

(QUALIFIED TO MIL-DTL-28748)

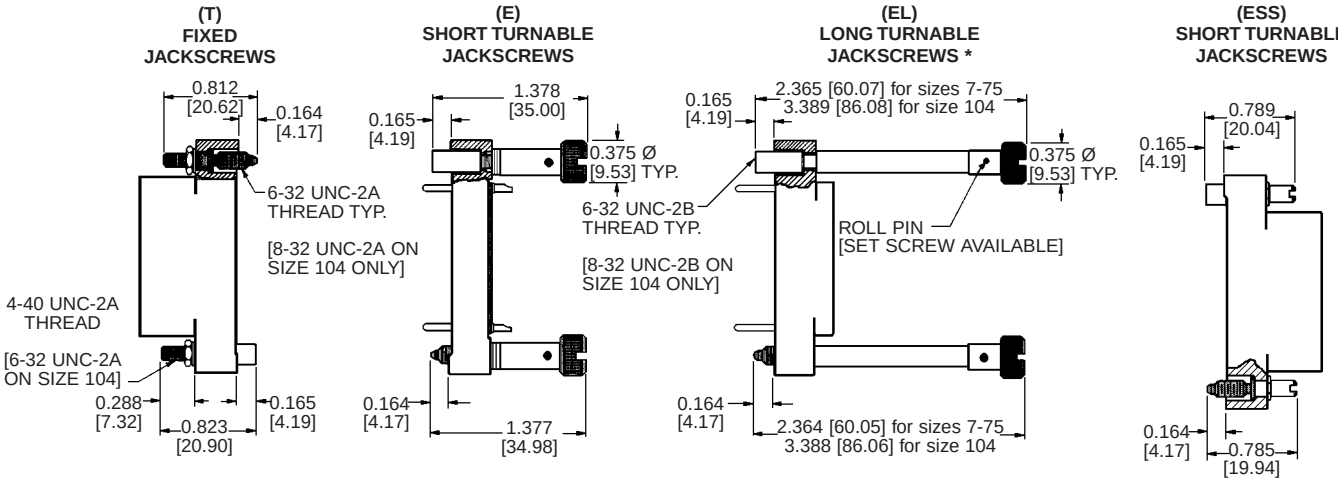

(STAINLESS STEEL) (STAINLESS STEEL WITH ALUMINUM KNOBS) (STAINLESS STEEL WITH ALUMINUM TUBES AND KNOBS) (STAINLESS STEEL)

"E" AND "EL" OPTIONS USING ROLL PINS MAY HAVE SOLID WIRE THREADED THROUGH THE ROLL PINS AS AN ANTI-ROTATION MEASURE.

*** WHEN SUPPLIED WITH A HOOD AND WITH A FEMALE OR MALE SHELL, THE JACKSCREW MATING LENGTHS 0.16 [4.1] SHALL BE 0.12 [3.2] AND THE 0.17 [4.3] SHALL BE 0.13 [3.3]**

ON A MALE CONNECTOR, THE FEMALE GUIDE OR FEMALE JACKSCREW IS LOCATED AT CONTACT POSITION A OR NO. 1

METRIC THREADS AVAILABLE, SEE PAGE 48

POLARIZING GUIDE DIMENSIONS (N, NSS, G)

(QUALIFIED TO MIL-DTL-2874)

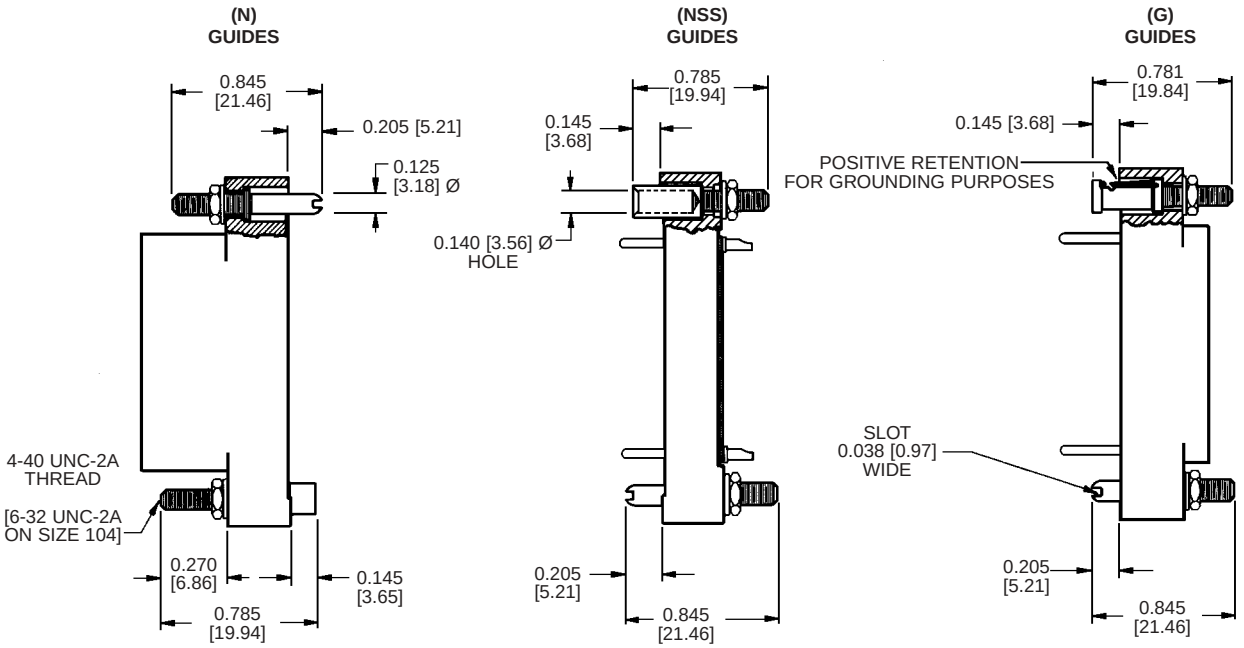

(COPPER ALLOY) (STAINLESS STEEL) (COPPER ALLOY)

ON A MALE CONNECTOR, THE FEMALE GUIDE OR FEMALE JACKSCREW IS LOCATED AT CONTACT POSITION A OR NO. 1

METRIC THREADS AVAILABLE, SEE PAGE 48

**DIMENSIONS ARE IN INCHES [MILLIMETERS].
ALL DIMENSIONS ARE SUBJECT TO CHANGE.**

Downloaded from Arrow.com.

HEAVY-DUTY RECTANGULAR CONNECTORS FOR GMCT, GAP, GAPL, VMCT, VAPL, GM AND GMPL SERIES

POLARIZING GUIDES

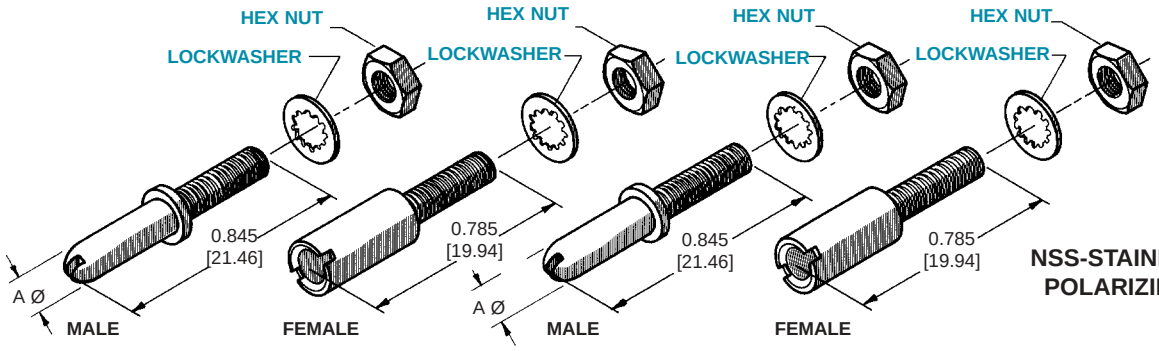

N-POLARIZING GUIDES

NSS-STAINLESS STEEL POLARIZING GUIDES

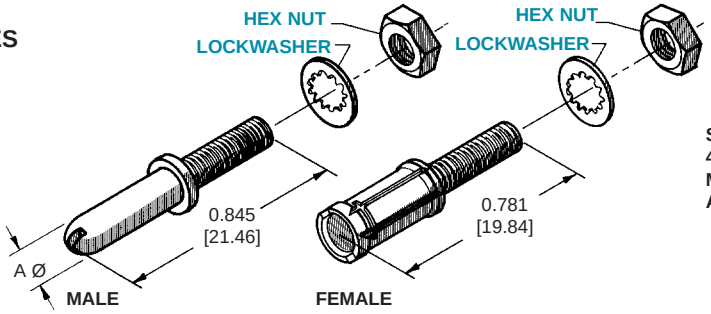

STUD THREAD OF 4-40 UNC-2A IS STANDARD, METRIC THREADS AVAILABLE UPON REQUEST

G-POLARIZING GROUNDING GUIDES

NUT DRIVER

Part Number: 9535-1 FOR 4-40 THREADS
Part Number: 9535-2 FOR 6-32 THREADS

TYPE	MATERIAL AND FINISH	USED ON CONNECTOR VARIANTS	A Ø
N-GUIDE MALE	COPPER ALLOY WITH NICKEL PLATE	7 AND 9 THROUGH 75	0.124 [3.15]
		104	0.124 [3.15]
N-GUIDE FEMALE	COPPER ALLOY WITH NICKEL PLATE	7 AND 9 THROUGH 75	——
		104	——
NSS-GUIDE MALE	STAINLESS STEEL PASSIVATED	7 AND 9 THROUGH 75	0.124 [3.15]
		104	0.124 [3.15]
NSS-GUIDE FEMALE	STAINLESS STEEL PASSIVATED	7 AND 9 THROUGH 75	——
		104	——
G-GUIDE MALE	COPPER ALLOY WITH NICKEL PLATE	7 AND 9 THROUGH 75	0.124 [3.15]
		104	0.124 [3.15]
G-GUIDE FEMALE	COPPER ALLOY WITH NICKEL PLATE	7 AND 9 THROUGH 75	——
		104	——

DIMENSIONS ARE IN INCHES [MILLIMETERS].
ALL DIMENSIONS ARE SUBJECT TO CHANGE.

Downloaded from Arrow.com.

FIXED AND TURNABLE JACKSCREW SYSTEM

SEE PAGE 48 FOR THREAD INFORMATION

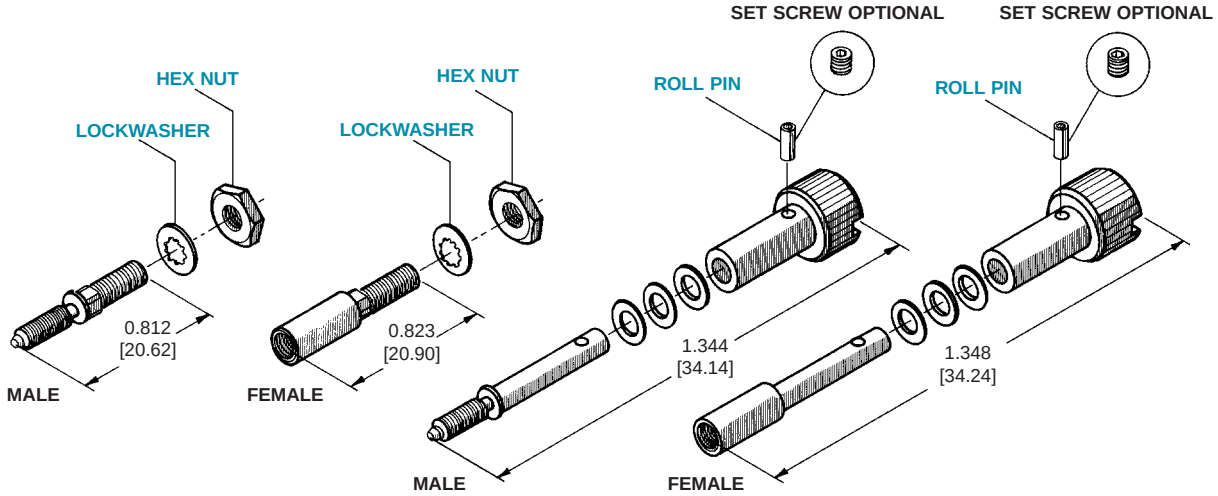

T - FIXED JACKSCREWS

E - SHORT TURNABLE JACKSCREWS

ROLL PIN ASSEMBLY TOOL

Part Number: 9530-0-0-0

"E" AND "EL" OPTIONS USING ROLL PINS MAY HAVE SOLID WIRE THREADED THROUGH THE ROLL PINS AS AN ANTI-ROTATION MEASURE.

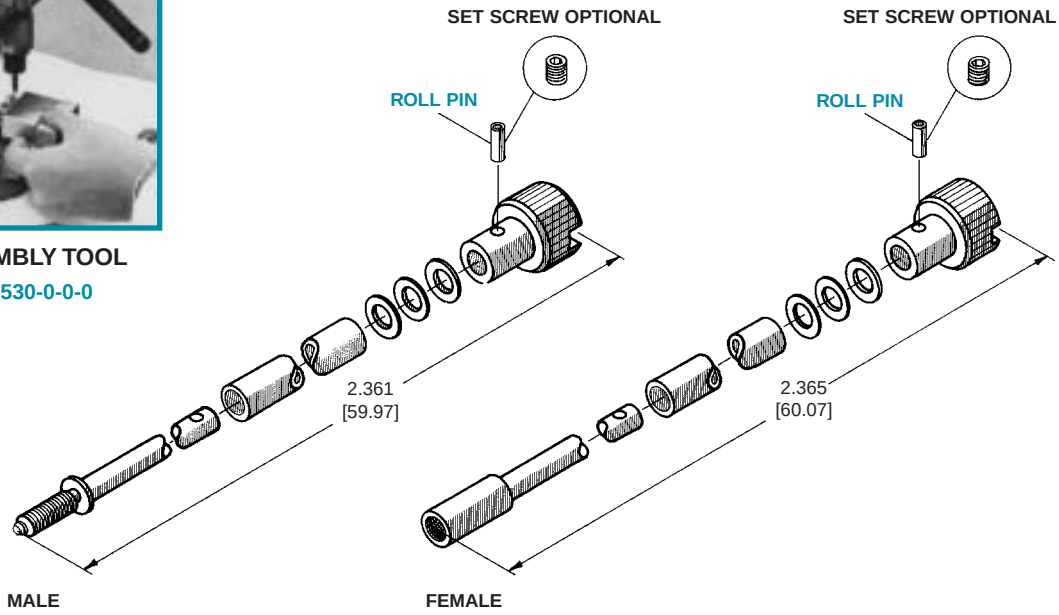

EL - LONG TURNABLE JACKSCREWS

DIMENSIONS ARE IN INCHES [MILLIMETERS].
ALL DIMENSIONS ARE SUBJECT TO CHANGE.

Downloaded from Arrow.com.

FIXED AND TURNABLE JACKSCREW SYSTEMS

COUPLING THREAD SIZES ONLY

TYPE	MATERIAL AND FINISH	AVAILABILITY M3x0.5			USED ON CONNECTOR VARIANTS
		6-32 THREAD	8-32 THREAD	M3x0.5 METRIC THD.	
T JACKSCREW MALE	STAINLESS STEEL PASSIVATED	X	------	X	7 AND 9 THROUGH 75
		------	X	X	104
T JACKSCREW FEMALE	STAINLESS STEEL PASSIVATED	X	------	X	7 AND 9 THROUGH 75
		------	X	X	104
E JACKSCREW MALE	STAINLESS STEEL PASSIVATED	X *	------	X	7 AND 9 THROUGH 75
		------	X	X	104
E JACKSCREW FEMALE	STAINLESS STEEL PASSIVATED	X *	------	X	7 AND 9 THROUGH 75
		------	X	X	104
EL JACKSCREW MALE	STAINLESS STEEL PASSIVATED	X *	------	X	7 AND 9 THROUGH 75
		------	X	X	104
EL JACKSCREW FEMALE	STAINLESS STEEL PASSIVATED	X *	------	X	7 AND 9 THROUGH 75
		------	X	X	104

*** SET SCREW OPTION AVAILABLE ON STAINLESS STEEL TURNABLE JACKSCREWS WITH 6-32 THREADS ONLY**

Downloaded from Arrow.com.

POLARIZATION OF MALE AND FEMALE SHELLS

(QUALIFIED TO MIL-DTL-28748)

POLARIZATION

Polarization is accomplished with shells by a pin and slot arrangement. Female shells are slotted to accept non-magnetic stainless steel polarizing pins mounted on the male shells.

There are 7 polarizing positions available which are designated by the letters A, B, C, D, E, F or G. Nonpolarized shells are designated by "O" and are supplied without slot and pin. See ordering chart.

MALE SHELL

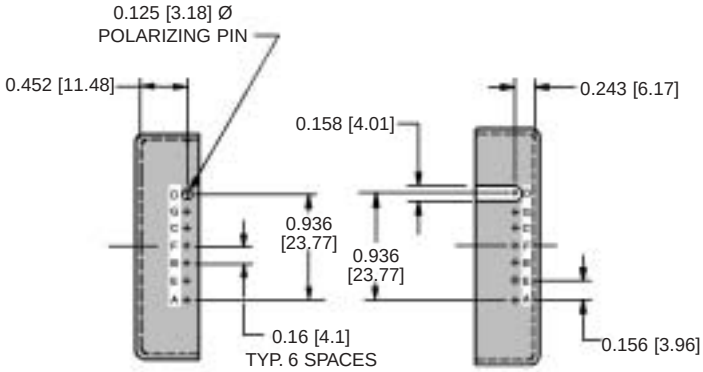

Typical Part Number:
G34000PD000

FEMALE SHELL

Typical Part Number:
G34000RD000

DIMENSIONS FOR FEMALE SHELLS (R)

(QUALIFIED TO MIL-DTL-28748)

FIGURE 1

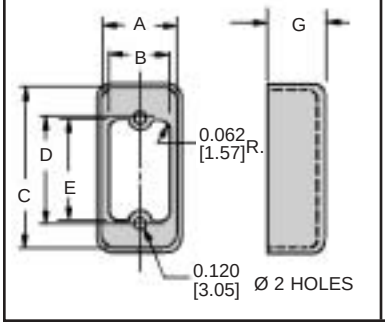

FIGURE 2

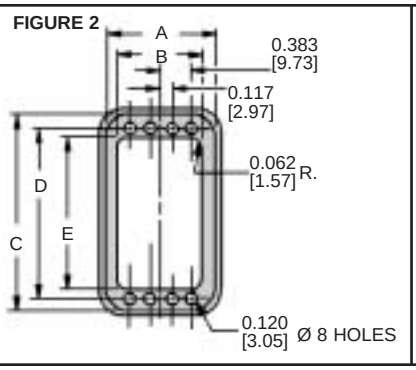

FIGURE 3

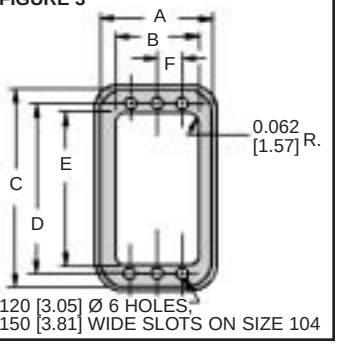

FIGURE	PART NUMBER	A	B	C	D	E	F	G
1	G9000R000	0.517 [13.13]	0.380 [9.65]	1.453 [36.91]	1.000 [25.40]	0.875 [22.23]	-----	0.719 [18.26]
1	G14000R000	0.580 [14.73]	0.445 [11.30]	1.393 [35.38]	0.938 [23.83]	0.812 [20.62]	-----	0.719 [18.26]
1	G18000R000	0.705 [17.91]	0.575 [14.61]	1.453 [36.91]	1.000 [25.40]	0.875 [22.23]	-----	0.719 [18.26]
1	G20000R000	0.580 [14.73]	0.453 [11.51]	1.707 [43.36]	1.250 [31.75]	1.125 [28.58]	-----	0.719 [18.26]
1	G26000R000	0.705 [17.91]	0.580 [14.73]	1.775 [45.09]	1.312 [33.32]	1.187 [30.14]	-----	0.719 [18.26]
3	G34000R000	0.898 [22.81]	0.763 [19.38]	2.143 [54.43]	1.688 [42.88]	1.423 [36.14]	0.234 [5.94]	0.719 [18.26]
3	G42000R000	0.895 [22.73]	0.768 [19.51]	2.458 [62.43]	2.000 [50.80]	1.750 [44.45]	0.234 [5.94]	0.719 [18.26]
3	G50000R000	1.020 [25.91]	0.763 [19.38]	2.861 [72.67]	2.281 [57.94]	2.031 [51.59]	0.234 [5.94]	0.719 [18.26]
3	G66000R000	1.269 [32.23]	1.130 [28.70]	2.429 [61.70]	1.969 [50.01]	1.704 [43.28]	0.250 [6.35]	0.719 [18.26]
2	G75000R000	1.375 [34.93]	1.125 [28.58]	2.865 [72.77]	2.281 [57.94]	2.031 [51.59]	-----	0.719 [18.26]
3	G104000R000	1.688 [42.88]	1.481 [37.62]	2.905 [73.78]	2.375 [60.33]	2.075 [52.71]	0.438 [11.11]	0.719 [18.26]

MATERIAL: 0.040 [1.02] THICK ALUMINUM

FINISH: YELLOW OR BLACK ANODIZE

DIMENSIONS ARE IN INCHES [MILLIMETERS].
ALL DIMENSIONS ARE SUBJECT TO CHANGE.

Downloaded from Arrow.com.

HEAVY-DUTY RECTANGULAR CONNECTORS FOR GMCT, GAP, GAPL, VMCT, VAPL, GM AND GMPL SERIES

DIMENSIONS FOR MALE SHELLS (P)

(QUALIFIED TO MIL-DTL-28748)

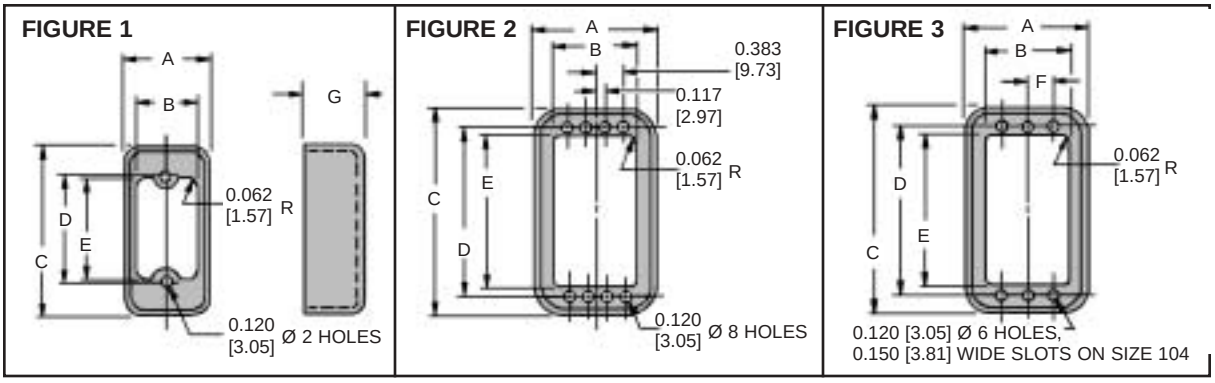

FIGURE	PART NUMBER	A	B	C	D	E	F	G
1	G9000P000	0.495 [12.57]	0.380 [9.65]	1.435 [36.45]	1.000 [25.40]	0.875 [22.23]	-----	0.719 [18.26]
1	G14000P000	0.562 [14.27]	0.445 [11.30]	1.375 [34.93]	0.938 [23.83]	0.812 [20.62]	-----	0.719 [18.26]
1	G18000P000	0.683 [17.35]	0.575 [14.61]	1.435 [36.45]	1.000 [25.40]	0.875 [22.23]	-----	0.719 [18.26]
1	G20000P000	0.562 [14.27]	0.453 [11.51]	1.687 [42.85]	1.250 [31.75]	1.125 [28.58]	-----	0.719 [18.26]
1	G26000P000	0.682 [17.32]	0.580 [14.73]	1.750 [44.50]	1.312 [33.32]	1.187 [30.14]	-----	0.719 [18.26]
3	G34000P000	0.870 [22.10]	0.763 [19.38]	2.120 [53.85]	1.688 [42.88]	1.423 [36.14]	0.234 [5.94]	0.719 [18.26]
3	G42000P000	0.875 [22.23]	0.768 [19.51]	2.432 [61.77]	2.000 [50.80]	1.750 [44.45]	0.234 [5.94]	0.719 [18.26]
3	G50000P000	1.000 [25.40]	0.763 [19.38]	2.841 [72.16]	2.281 [57.94]	2.031 [51.59]	0.234 [5.94]	0.719 [18.26]
3	G66000P000	1.249 [31.72]	1.130 [28.70]	2.405 [61.09]	1.969 [50.01]	1.704 [43.28]	0.250 [6.35]	0.719 [18.26]
2	G75000P000	1.355 [34.42]	1.125 [28.58]	2.845 [72.26]	2.281 [57.94]	2.031 [51.59]	-----	0.719 [18.26]
3	G104000P000	1.665 [42.29]	1.481 [37.62]	2.885 [73.28]	2.375 [60.33]	2.075 [52.71]	0.438 [11.11]	0.719 [18.26]

MATERIAL: 0.040 [1.02] THICK ALUMINUM

FINISH: YELLOW OR BLACK ANODIZE

DIMENSIONS ARE IN INCHES [MILLIMETERS].
ALL DIMENSIONS ARE SUBJECT TO CHANGE.

Downloaded from Arrow.com.

DIMENSIONS FOR MOUNTING PLATES (H)

(QUALIFIED TO MIL-DTL-28748)

Mounting plates provide a simple, economical means of mounting the connector to any supporting surface. They can be used with or without shells and are available with floating bushings for “blind mountings” to facilitate alignment and coupling of the connector.

FIGURE 1

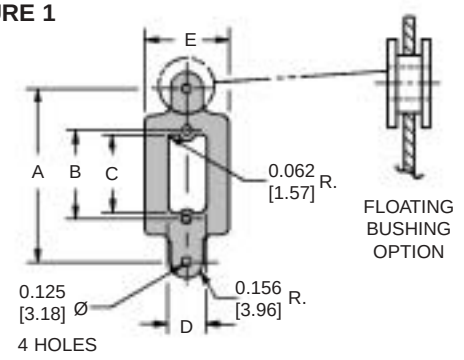

FIGURE 2

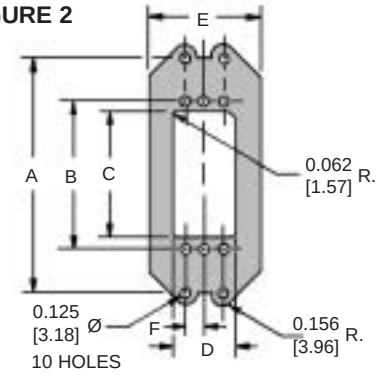

FIGURE 3

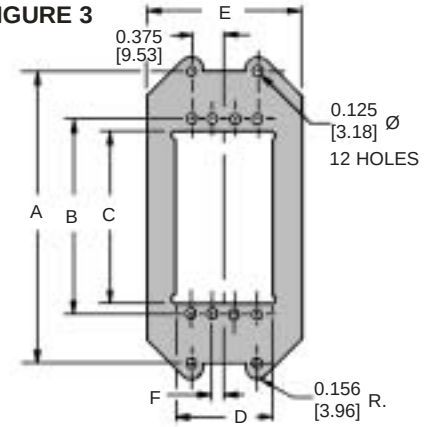

FIGURE 4

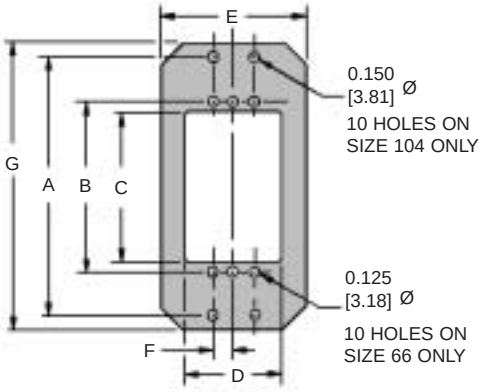

FIGURE	PART NUMBER	A	B	C	D	E	F	G
1	G9000H000	2.016 [51.21]	1.000 [25.40]	0.876 [22.25]	0.406 [10.31]	0.958 [24.33]	-----	-----
1	G14000H000	1.953 [49.61]	0.937 [23.80]	0.812 [20.62]	0.469 [11.91]	1.015 [25.78]	-----	-----
1	G18000H000	2.016 [51.21]	1.000 [25.40]	0.875 [22.23]	0.594 [15.09]	1.141 [28.98]	-----	-----
1	G20000H000	2.266 [57.56]	1.250 [31.75]	1.125 [28.58]	0.468 [11.89]	1.016 [25.81]	-----	-----
1	G26000H000	2.328 [59.13]	1.312 [33.32]	1.188 [30.18]	0.594 [15.09]	1.140 [28.96]	-----	-----
2	G34000H000	2.703 [68.66]	1.687 [42.85]	1.438 [36.53]	0.750 [19.05]	1.328 [33.73]	0.234 [5.94]	-----
2	G42000H000	3.016 [76.61]	2.000 [50.80]	1.750 [44.45]	0.750 [19.05]	1.328 [33.73]	0.234 [5.94]	-----
2	G50000H000	3.422 [86.92]	2.281 [57.94]	2.031 [51.59]	0.750 [19.05]	1.453 [36.91]	0.234 [5.94]	-----
4	G66000H000	2.984 [75.79]	1.969 [50.01]	1.718 [43.64]	1.125 [28.58]	1.688 [42.88]	0.250 [6.35]	3.296 [83.72]
3	G75000H000	3.422 [86.92]	2.281 [57.94]	2.031 [51.59]	1.109 [28.17]	1.797 [45.65]	0.117 [2.98]	-----
4	G104000H000	3.500 [88.90]	2.375 [60.33]	2.125 [53.98]	1.488 [37.74]	2.000 [50.80]	0.438 [11.13]	3.875 [98.43]

MATERIAL: ALUMINUM

FINISH: YELLOW OR BLACK ANODIZE

FOR FLOATING BUSHING OPTION USE CODE “FB” IN STEP 9 OF ORDERING INFORMATION

DIMENSIONS ARE IN INCHES [MILLIMETERS].
ALL DIMENSIONS ARE SUBJECT TO CHANGE.

Downloaded from Arrow.com.

HEAVY-DUTY RECTANGULAR CONNECTORS FOR GMCT, GAP, GAPL, VMCT, VAPL, GM AND GMPL SERIES

CABLE ADAPTERS
DIMENSIONS FOR TOP OPENING HOODS (J,Q)

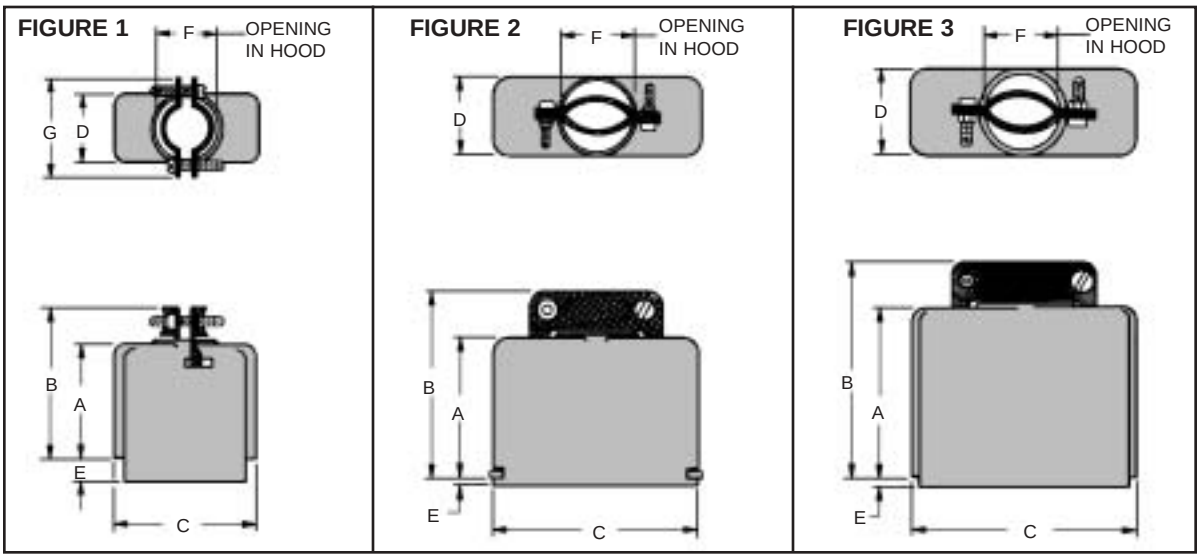

FIGURE	PART NUMBER	A	B	C	D	E	F	G
3	G700000J0	1.140 [28.96]	1.549 [39.34]	1.225 [31.12]	0.437 [11.10]	0.200 [5.08]	0.312 Ø [7.92]	-----
3	G800000J0	1.000 [25.40]	1.304 [33.12]	0.812 [20.62]	0.437 [11.10]	0.281 [7.14]	0.250 Ø [6.35]	-----
1	G900000J0	1.245 [31.62]	1.636 [41.55]	1.357 [34.47]	0.437 [11.10]	0.293 [7.44]	0.375 [9.53] x 0.516 [13.11]	0.812 [20.62]
3	G900000J20	0.855 [21.72]	1.235 [31.38]	1.340 [34.04]	0.437 [11.10]	0.255 [6.48]	0.312 Ø [7.92]	-----
1	G1400000J0	1.200 [30.48]	1.591 [40.41]	1.250 [31.75]	0.500 [12.70]	0.281 [7.14]	0.438 [11.13] x 0.495 [12.57]	0.812 [20.62]
3	G1400000J30	1.188 [30.18]	1.522 [38.66]	1.250 [31.75]	0.500 [12.70]	0.281 [7.14]	0.375 Ø [9.53]	-----
1	G1800000J0	1.188 [30.18]	1.606 [40.79]	1.312 [33.32]	0.624 [15.85]	0.374 [9.50]	0.531 Ø [13.49]	0.938 [23.83]
1	G2000000J0	1.312 [33.32]	1.640 [41.66]	1.580 [40.13]	0.502 [12.80]	0.281 [7.14]	0.442 [11.23] x 0.659 [16.74]	0.812 [20.62]
3	G2100000J0	1.335 [33.91]	1.780 [45.21]	2.290 [58.17]	0.437 [11.10]	0.245 [6.22]	0.375 Ø [9.53]	-----
3	G2600000J0	1.281 [32.54]	1.727 [43.87]	1.625 [41.28]	0.624 [15.85]	0.281 [7.14]	0.375 [9.53] x 0.594 [15.09]	-----
3	G3400000J0	1.250 [31.75]	1.652 [41.96]	2.000 [50.80]	0.834 [21.18]	0.271 [6.88]	0.700 Ø [17.79]	-----
1	G4100000J0	1.250 [31.75]	1.629 [41.44]	2.690 [68.31]	0.507 [12.88]	0.315 [8.00]	0.445 [11.30] x 0.630 [16.00]	0.812 [20.62]
3	G4200000J0	1.300 [33.02]	1.700 [43.18]	2.312 [58.72]	0.830 [21.08]	0.093 [2.36]	0.695 Ø [17.65]	-----
3	G5000000J0	1.834 [46.58]	2.292 [58.22]	2.600 [66.04]	0.812 [20.62]	0.099 [2.51]	0.750 [19.05] x 0.990 [25.15]	-----
3	G5000000J20	1.390 [35.31]	1.708 [43.38]	2.594 [65.89]	0.812 [20.62]	0.093 [2.36]	0.625 Ø [15.88]	-----
3	G5000000J30	1.832 [46.53]	2.292 [58.22]	2.600 [66.04]	0.812 [20.62]	0.139 [3.53]	0.750 Ø [19.05]	-----
3	G5000000J50	1.297 [32.94]	1.745 [44.32]	2.594 [65.89]	0.812 [20.62]	0.093 [2.36]	0.750 [19.05] x 0.990 [25.15]	-----
2	G6600000Q0	1.140 [28.96]	1.644 [41.76]	2.377 [60.38]	1.221 [31.01]	0.110 [2.79]	0.874 [22.20] x 1.141 [28.98]	-----
3	G7500000J0	2.015 [51.18]	2.530 [64.26]	2.594 [65.89]	1.189 [30.20]	0.085 [2.16]	1.060 Ø [26.92]	-----
2	G10400000Q0	2.220 [56.39]	2.722 [69.14]	2.846 [72.29]	1.627 [41.33]	0.092 [2.34]	1.188 Ø [30.18]	-----

PLASTIC CABLE CLAMPS FOR RIGID CABLE SUPPORT ARE AVAILABLE ON HOODS FOR CONTACT VARIANTS 34, 42 AND 50. SEE PAGE 57.

MATERIAL: HOODS, CABLE CLAMPS AND KNOBS - ALUMINUM, YELLOW OR BLACK ANODIZE

DESKIRTED HOODS AVAILABLE

HOODS HAVE THREADED MOUNTING HOLES FOR USE WITH POLARIZING GUIDES TO ATTACH TO CONNECTOR

DIMENSIONS ARE IN INCHES [MILLIMETERS].
ALL DIMENSIONS ARE SUBJECT TO CHANGE.

Downloaded from Arrow.com.

CABLE ADAPTERS
DIMENSIONS FOR SIDE OPENING HOODS (L,S)

FIGURE 1

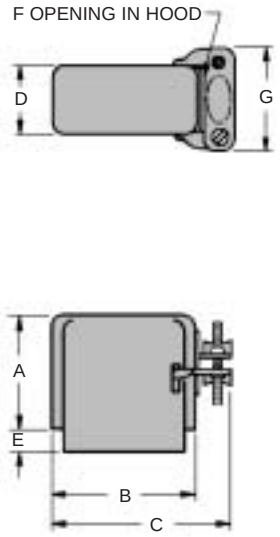

FIGURE 2

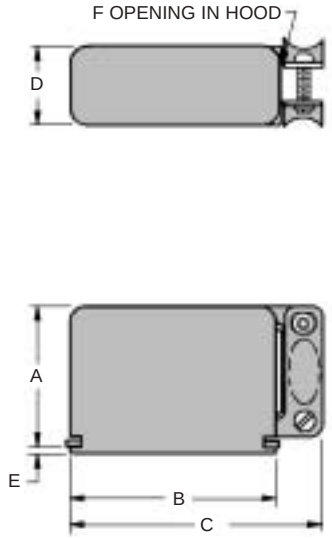

FIGURE 3

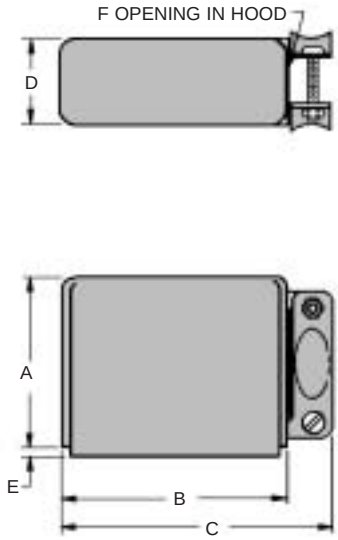

FIGURE	PART NUMBER	A	B	C	D	E	F	G
1	G900000L0	1.240 [31.50]	1.362 [34.59]	1.726 [43.84]	0.437 [11.10]	0.246 [6.25]	0.375 [9.53] x 0.500 [12.70]	0.812 [20.62]
1	G1400000L0	1.187 [30.15]	1.250 [31.75]	1.592 [40.44]	0.500 [12.70]	0.281 [7.14]	0.438 [11.13] x 0.500 [12.70]	0.812 [20.62]
3	G1400000L30	1.188 [30.18]	1.250 [31.75]	1.631 [41.43]	0.500 [12.70]	0.281 [7.14]	0.375 Ø [9.53]	-----
1	G1800000L0	1.188 [30.18]	1.312 [33.32]	1.754 [44.55]	0.624 [15.85]	0.281 [7.14]	0.546 Ø [13.87]	0.948 [24.08]
1	G2000000L0	1.312 [33.32]	1.562 [39.67]	1.874 [47.60]	0.504 [12.80]	0.231 [5.87]	0.442 [11.23] x 0.668 [16.97]	0.812 [20.62]
3	G2100000L0	1.335 [33.91	2.290 [58.17]	2.736 [69.49]	0.437 [11.10]	0.245 [6.22]	0.375 Ø [9.53]	-----
3	G2600000L0	1.281 [32.54]	1.625 [41.28]	2.071 [52.60]	0.624 [15.85]	0.281 [7.14]	0.375 [9.53] x 0.594 [15.09]	-----
3	G3400000L0	1.250 [31.75]	2.000 [50.80]	2.403 [61.04]	0.834 [21.19]	0.093 [2.36]	0.700 Ø [17.78]	-----
1	G4100000L0	1.250 [31.75]	2.690 [68.33]	3.128 [79.45]	0.507 [12.88]	0.315 [8.00]	0.426 [10.82] x 0.615 [15.62]	-----
3	G4200000L0	1.300 [33.02]	2.312 [58.72]	2.712 [68.88]	0.830 [21.08]	0.093 [2.36]	0.695 Ø [17.65]	-----
3	G5000000L0	1.834 [46.58]	2.678 [68.02]	3.124 [79.35]	0.812 [20.62]	0.093 [2.36]	0.750 [19.05] x 0.990 [25.15]	
2	G6600000S0	1.140 [28.96]	2.377 [60.38]	2.947 [74.85]	1.221 [31.01]	0.110 [2.79]	0.845 Ø [21.46]	-----
3	G7500000L0	2.015 [51.18]	2.594 [65.89]	3.109 [78.97]	1.189 [30.20]	0.085 [2.16]	1.060 Ø [26.92]	-----

MATERIAL: HOODS, CABLE CLAMPS AND KNOBS - ALUMINUM, YELLOW OR BLACK ANODIZE
HOODS HAVE THREADED MOUNTING HOLES FOR USE WITH POLARIZING GUIDES TO ATTACH TO CONNECTOR
DESKIRTED HOODS AVAILABLE

DIMENSIONS ARE IN INCHES [MILLIMETERS].
ALL DIMENSIONS ARE SUBJECT TO CHANGE.

Downloaded from Arrow.com.

HEAVY-DUTY RECTANGULAR CONNECTORS FOR GMCT, GAP, GAPL, VMCT, VAPL, GM AND GMPL SERIES

CABLE ADAPTERS
DIMENSIONS FOR TOP OPENING HOODS WITH JACKSCREW SYSTEM (J, Y, Z)

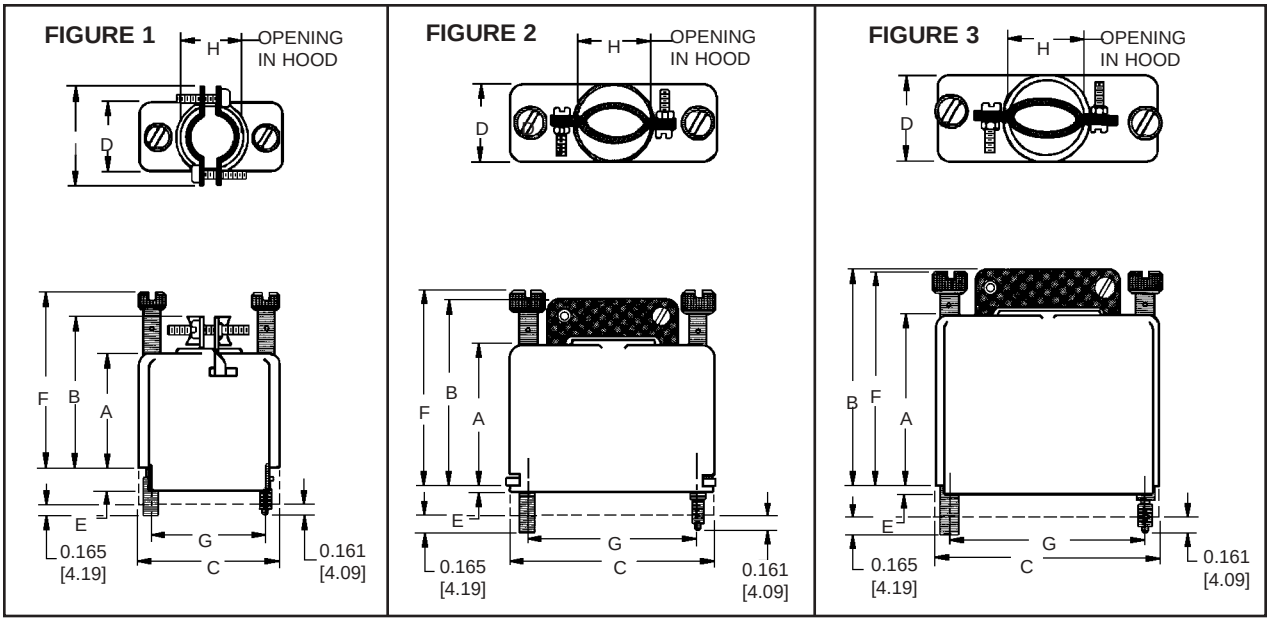

FIGURE	PART NUMBER	A	B	C	D	E	F	G	H	I
1	G900E100J0	1.245 [31.62]	1.636 [41.55]	1.357 [34.47]	0.437 [11.10]	0.293 [7.44]	2.163 [54.94]	1.000 [25.40]	0.375 [9.53] x 0.516 [13.11]	0.812 [20.62]
1	G1400E100J0	1.200 [30.48]	1.591 [40.41]	1.250 [31.75]	0.500 [12.70]	0.281 [7.14]	2.084 [52.93]	0.936 [23.77]	0.438 [11.13] x 0.495 [12.57]	0.812 [20.62]
1	G1800E100J0	1.188 [30.18]	1.606 [40.79]	1.312 [33.32]	0.624 [15.85]	0.374 [9.50]	2.084 [52.93]	1.000 [25.40]	0.531 Ø [13.49]	0.938 [23.83]
1	G2000E100J0	1.312 [33.32]	1.640 [41.66]	1.580 [40.13]	0.502 [12.80]	0.281 [7.14]	2.102 [53.39]	1.250 [31.75]	0.442 [11.23] x 0.659 [16.74]	0.812 [20.62]
3	G2100E100J0	1.335 [33.91]	1.780 [45.21]	2.290 [58.17]	0.437 [11.10]	0.245 [6.22]	2.209 [56.11]	1.936 [49.17]	0.375 Ø [9.53]	-----
3	G2600E100J0	1.281 [32.54]	1.727 [43.87]	1.625 [41.28]	0.624 [15.85]	0.281 [7.14]	2.126 [54.00]	1.312 [33.32]	0.375 [9.53] x 0.594 [15.09]	-----
3	G3400000Y0	1.250 [31.75]	1.652 [41.96]	2.000 [50.80]	0.834 [21.18]	0.271 [6.88]	2.000 [50.80]	1.687 [42.85]	0.700 Ø [17.79]	-----
1	G4100E100J0	1.250 [31.75]	1.629 [41.44]	2.690 [68.31]	0.507 [12.88]	0.315 [8.00]	2.093 [53.16]	2.312 [58.72]	0.445 [11.30] x 0.630 [16.00]	0.812 [20.62]
3	G4200000Y0	1.300 [33.02]	1.700 [43.18]	2.312 [58.72]	0.830 [21.08]	0.093 [2.36]	2.046 [51.97]	2.000 [50.80]	0.695 Ø [17.63]	-----
3	G5000000Y0	1.834 [46.58]	2.292 [58.22]	2.600 [66.04]	0.812 [20.62]	0.099 [2.51]	2.574 [65.38]	2.281 [57.94]	0.750 [19.05] x 0.990 [25.15]	-----
3	G5000000Y20	1.390 [35.31]	1.708 [43.38]	2.594 [65.89]	0.812 [20.62]	0.093 [2.36]	2.047 [51.99]	2.281 [57.94]	0.625 Ø [15.88]	-----
3	G5000000Y30	1.832 [46.53]	2.292 [58.22]	2.600 [66.04]	0.812 [20.62]	0.139 [3.53]	2.574 [65.38]	2.281 [57.94]	0.750 Ø [19.05]	-----
3	G5000000Y50	1.297 [32.94]	1.745 [44.32]	2.594 [65.89]	0.812 [20.62]	0.093 [2.36]	2.046 [51.97]	2.281 [57.94]	0.750 [19.05] x 0.990 [25.15]	-----
2	G6600000Z0	1.140 [28.96]	1.644 [41.76]	2.377 [60.38]	1.221 [31.01]	0.110 [2.79]	2.047 [51.99]	1.969 [50.01]	0.874 [22.20] x 1.141 [28.97]	-----
3	G7500000Y0	2.015 [51.18]	2.530 [64.26]	2.594 [65.89]	1.189 [30.20]	0.085 [2.16]	2.740 [69.60]	2.281 [57.94]	1.060 Ø [26.92]	-----
2	G10400000Z0	2.220 [56.39]	2.722 [69.14]	2.846 [72.29]	1.627 [41.33]	0.092 [2.34]	3.087 [78.41]	2.375 [60.33]	1.188 Ø [30.18]	-----

MATERIAL: HOODS, CABLE CLAMPS AND KNOBS - ALUMINUM, YELLOW OR BLACK ANODIZE
JACKSCREWS - STAINLESS STEEL, PASSIVATED, SEE PAGE 48 FOR THREAD INFORMATION
M 3 x 0.5 METRIC THREADS AVAILABLE ON ZINC PLATED STEEL JACKSCREWS
DESKIRTED HOODS AVAILABLE

* WHEN SUPPLIED WITH A FEMALE OR MALE SHELL, THE JACKSCREW MATING LENGTHS 0.16 [4.1] SHALL BE 0.12 [3.2] AND THE 0.17 [4.3] SHALL BE 0.13 [3.3]

DIMENSIONS ARE IN INCHES [MILLIMETERS].
ALL DIMENSIONS ARE SUBJECT TO CHANGE.

Downloaded from Arrow.com.

CABLE ADAPTERS
DIMENSIONS FOR SIDE OPENING HOODS WITH JACKSCREW SYSTEM (L,I,V)

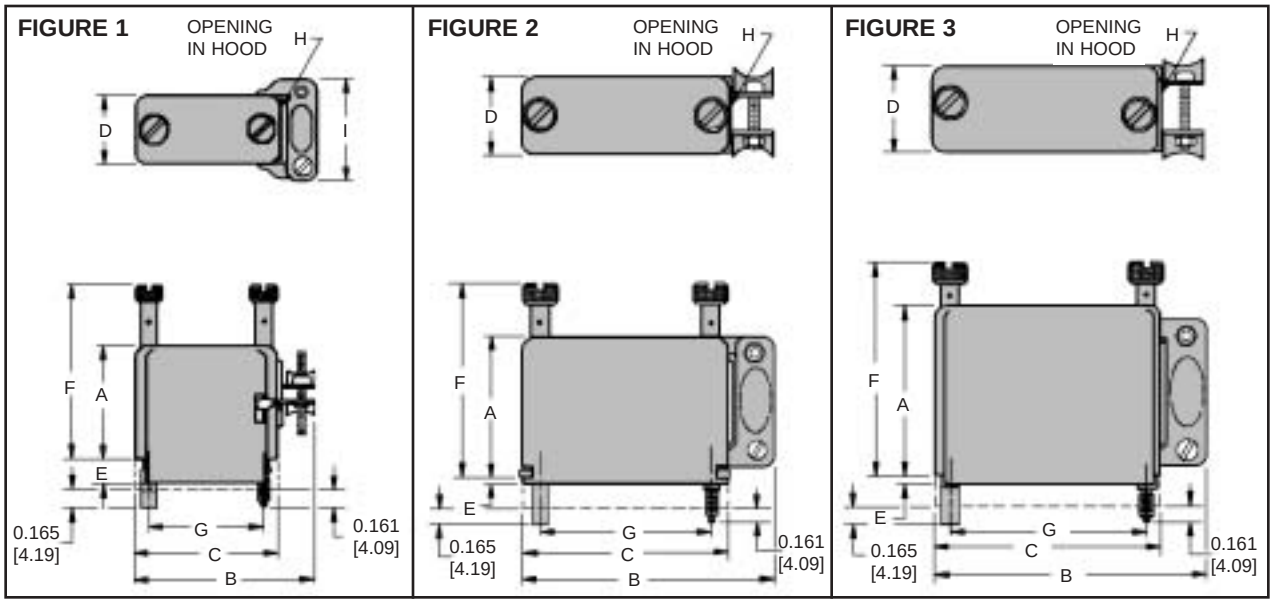

FIGURE	PART NUMBER	A	B	C	D	E	F	G	H	I
1	G900E100L0	1.240 [31.50]	1.726 [43.84]	1.362 [34.59]	0.437 [11.10]	0.246 [6.25]	2.163 [54.94]	1.000 [25.40]	0.375 [9.53] x 0.500 [12.70]	0.812 [20.62]
1	G1400E100L0	1.187 [30.15]	1.592 [40.44]	1.250 [31.75]	0.500 [12.70]	0.281 [7.14]	2.084 [52.93]	0.936 [23.77]	0.438 [11.13] x 0.500 [12.70]	0.812 [20.62]
3	G1400E100L30	1.188 [30.18]	1.631 [41.43]	1.250 [31.75]	0.500 [12.70]	0.281 [7.14]	2.084 [52.93]	0.936 [23.77]	0.375 Ø [9.53]	-----
1	G1800E100L0	1.188 [30.18]	1.754 [44.55]	1.312 [33.32]	0.624 [15.85]	0.281 [7.14]	2.084 [52.93]	1.000 [25.40]	0.546 Ø [13.87]	0.948 [24.08]
1	G2000E100L0	1.312 [33.32]	1.874 [47.60]	1.562 [39.67]	0.504 [12.80]	0.231 [5.87]	2.102 [53.39]	1.250 [31.75]	0.442 [11.23] x 0.668 [16.97]	0.812 [20.62]
3	G2100E100L0	1.335 [33.91]	2.736 [69.49]	2.290 [58.17]	0.437 [11.10]	0.245 [6.22]	2.209 [56.11]	1.936 [49.17]	0.375 Ø [9.53]	-----
3	G2600E100L0	1.281 [32.54]	2.071 [52.60]	1.625 [41.28]	0.624 [15.85]	0.281 [7.14]	2.126 [54.00]	1.312 [33.32]	0.375 [9.53] x 0.594 [15.09]	-----
3	G3400000I0	1.250 [31.75]	2.403 [61.04]	2.000 [50.80]	0.834 [21.19]	0.093 [2.36]	2.000 [50.80]	1.687 [42.85]	0.700 Ø [17.78]	-----
3	G4100E100L0	1.250 [31.75]	3.128 [79.45]	2.690 [68.33]	0.507 [12.88]	0.315 [8.00]	2.093 [53.16]	2.312 [58.72]	0.426 [10.82] x 0.615 [15.62]	-----
3	G4200000I0	1.300 [33.02]	2.712 [68.88]	2.312 [58.72]	0.830 [21.08]	0.093 [2.36]	2.096 [51.97]	2.000 [50.80]	0.695 Ø [17.65]	-----
3	G5000000I0	1.834 [46.58]	3.124 [79.35]	2.678 [68.02]	0.812 [20.62]	0.093 [2.36]	2.574 [65.38]	2.281 [57.94]	0.750 [19.05] x 0.990 [25.15]	-----
2	G6600000V0	1.140 [28.96]	2.947 [74.85]	2.377 [60.38]	1.221 [31.01]	0.110 [2.79]	2.047 [51.99]	1.969 [50.01]	0.845 Ø [21.46]	-----
3	G7500000I0	2.015 [51.18]	3.109 [78.97]	2.594 [65.89]	1.189 [30.20]	0.085 [2.16]	2.740 [69.60]	2.281 [57.94]	1.060 Ø [26.92]	-----

MATERIAL: HOODS, CABLE CLAMPS AND KNOBS - ALUMINUM, YELLOW OR BLACK ANODIZE
JACKSCREWS - STAINLESS STEEL, PASSIVATED, SEE PAGE 48 FOR THREAD INFORMATION
M 3 x 0.5 METRIC THREADS AVAILABLE ON ZINC PLATED STEEL JACKSCREWS
DESKIRTED HOODS AVAILABLE UPON REQUEST

*** WHEN SUPPLIED WITH A FEMALE OR MALE SHELL, THE JACKSCREW MATING LENGTHS 0.16 [4.1] SHALL BE 0.12 [3.2] AND THE 0.17 [4.3] SHALL BE 0.13 [3.3]**

DIMENSIONS ARE IN INCHES [MILLIMETERS].
ALL DIMENSIONS ARE SUBJECT TO CHANGE.

Downloaded from Arrow.com.

CABLE ADAPTERS

DIMENSIONS FOR SIDE ACCESS HOODS WITH JACKSCREW SYSTEM (Z,V)

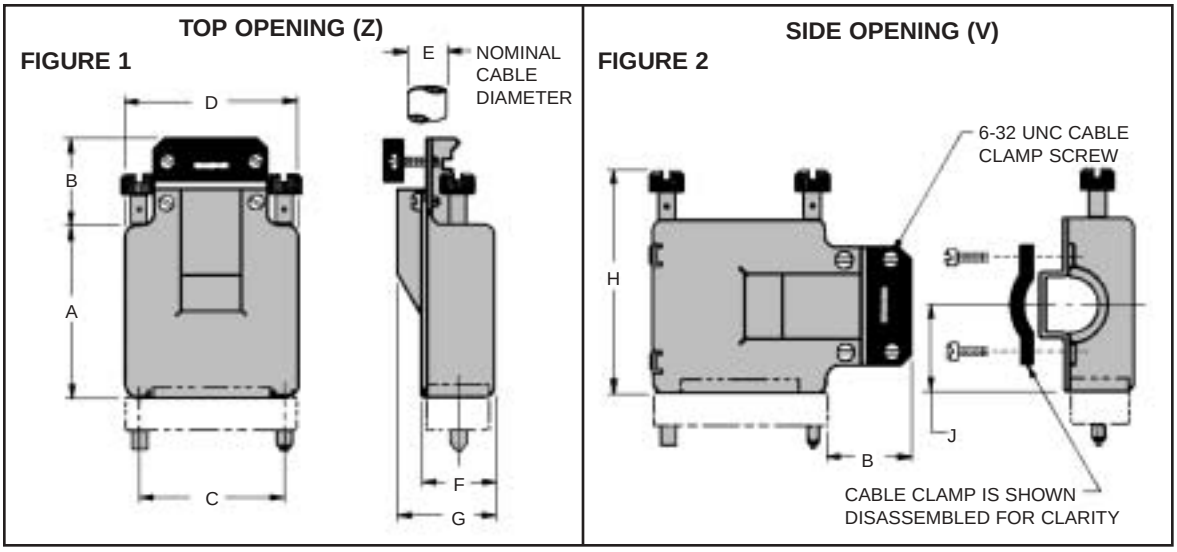

FIGURE	PART NUMBER	A	B	C	D	E	F	G	H	J
1	G3400000Z0	2.100 [53.34]	0.812 [20.62]	1.688 [42.88]	2.100 [53.34]	0.438 [11.13]	0.860 [21.84]	1.110 [28.19]	2.825 [71.76]	-----
2	G3400000V0	2.100 [53.34]	0.812 [20.62]	1.688 [42.88]	2.100 [53.34]	0.438 [11.13]	0.860 [21.84]	1.110 [28.19]	2.825 [71.76]	1.050 [26.67]
1	G5000000Z0	2.693 [68.40]	0.812 [20.62]	2.282 [57.96]	2.693 [68.40]	0.625 [15.88]	0.860 [21.84]	1.235 [31.37]	3.418 [86.82]	-----
2	G5000000V0	2.693 [68.40]	0.812 [20.62]	2.282 [57.96]	2.693 [68.40]	0.625 [15.88]	0.860 [21.84]	1.235 [31.37]	3.418 [86.82]	1.347 [34.21]
1	G7500000Z0	2.693 [68.40]	0.937 [23.80]	2.282 [57.96]	2.693 [68.40]	1.000 [25.40]	1.170 [29.72]	1.720 [43.69]	3.465 [88.01]	-----
2	G7500000V0	2.693 [68.40]	0.937 [23.80]	2.282 [57.96]	2.693 [68.40]	1.000 [25.40]	1.170 [29.72]	1.720 [43.69]	3.465 [88.01]	1.347 [34.21]

MATERIAL: HOODS AND KNOBS - ALUMINUM, YELLOW OR BLACK ANODIZE
CABLE CLAMPS - ALUMINUM, YELLOW OR BLACK ANODIZE
JACKSCREW - STAINLESS STEEL, PASSIVATED, 6-32 THREADS STANDARD
M3 x 0.5 METRIC THREADS AVAILABLE

DIMENSIONS ARE IN INCHES [MILLIMETERS].
ALL DIMENSIONS ARE SUBJECT TO CHANGE.

Downloaded from Arrow.com.

EMI/RFI SHIELDED HOOD

HOOD, CABLE CLAMPS AND KNOBS MATERIAL: ALUMINUM, YELLOW IRIDITE

JACKSCREWS MATERIAL: STAINLESS STEEL

SHIELD ENVELOP MATERIAL: CONDUCTIVE FABRIC TYPICAL SHIELDING EFFECTIVENESS AVERAGES 60 dB IN THE RANGE OF 10 MHz - 1 GHz

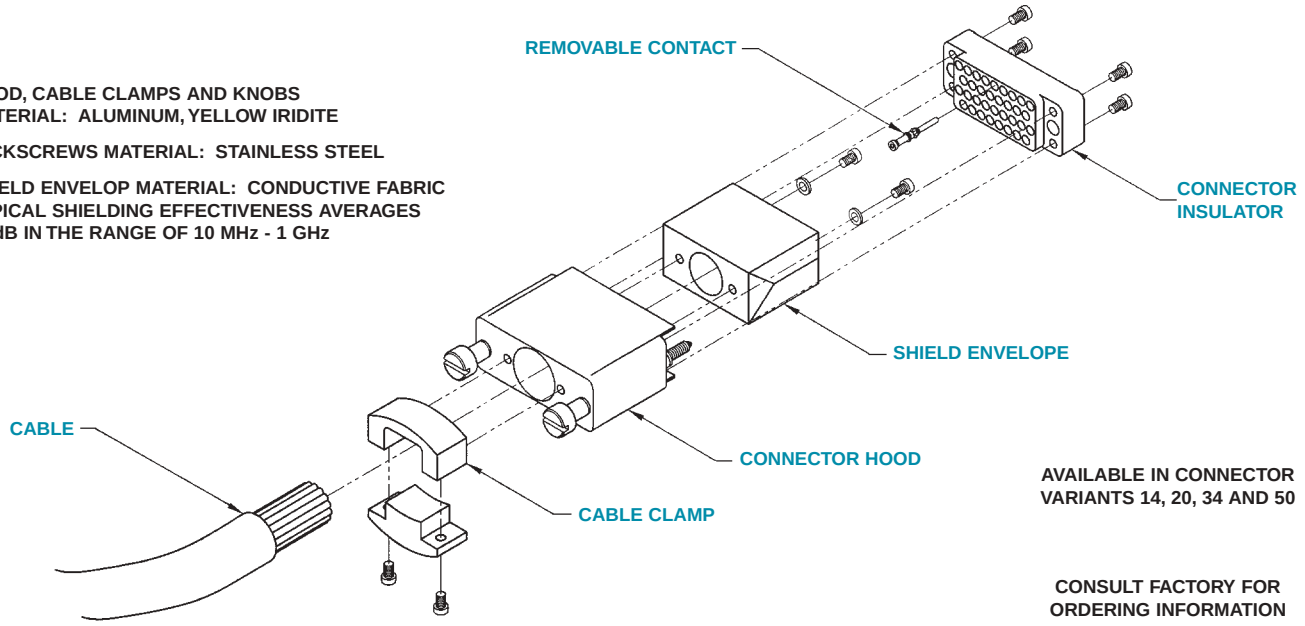

AVAILABLE IN CONNECTOR VARIANTS 14, 20, 34 AND 50

CONSULT FACTORY FOR ORDERING INFORMATION

TOP OPENING HOODS WITH JACKSCREW SYSTEM AND PLASTIC CABLE CLAMPS

FOR RIGID CABLE SUPPORT

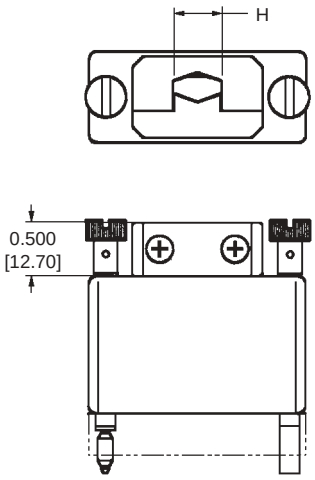

HOOD PART NUMBER	H
G3400000Y60	0.300 MAX. [7.62] Ø
G3400000Y70	0.375 MAX. [9.53] Ø
G3400000Y80	0.450 MAX. [11.43] Ø
G4200000Y60	0.300 MAX. [7.62] Ø
G4200000Y70	0.375 MAX. [9.53] Ø
G4200000Y80	0.450 MAX. [11.43] Ø
G5000000Y60	0.300 MAX. [7.62] Ø
G5000000Y70	0.375 MAX. [9.53] Ø
G5000000Y80	0.450 MAX. [11.43] Ø

CABLE CLAMPS MATERIAL - COMPOSITE STANDARD, GLASS FILLED POLYESTER OPTION

ALUMINUM MATERIAL WITH YELLOW OR BLACK ANODIZE FINISH ALSO AVAILABLE FOR CABLE CLAMPS

DIMENSIONS ARE IN INCHES [MILLIMETERS]. ALL DIMENSIONS ARE SUBJECT TO CHANGE.

Downloaded from Arrow.com.

PANEL CUT-OUT DIMENSIONS FOR GM SERIES AND GMCT SERIES CONNECTORS

FIGURE 1

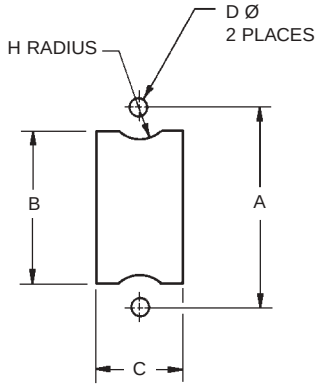

FIGURE 2

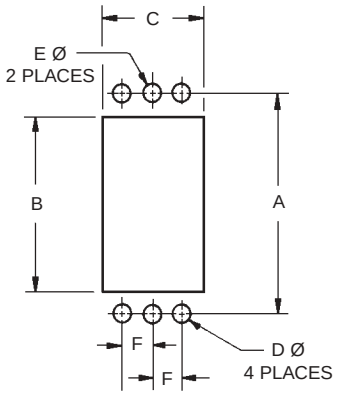

FIGURE 3

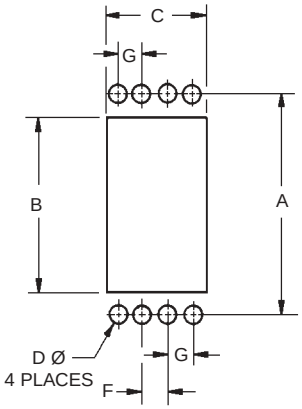

SIZE	FIGURE	A	B MIN.	C MIN.	D MIN.	E MIN.	F	G	H MAX.
7	1	0.906 [23.01]	0.660 [16.76]	0.386 [9.80]	0.120 [3.05]	------	------	------	------
8	1	0.562 [14.27]	0.440 [11.18]	0.385 [9.78]	0.095 [2.41]	------	------	------	------
9	1	1.000 [25.40]	0.820 [20.83]	0.386 [9.80]	0.120 [3.05]	------	------	------	------
14	1	0.936 [23.77]	0.817 [20.75]	0.446 [11.33]	0.120 [3.05]	------	------	------	0.118 [3.00]
18	1	1.000 [25.40]	0.880 [22.35]	0.572 [14.53]	0.120 [3.05]	------	------	------	0.115 [2.92]
20	1	1.250 [31.75]	1.129 [28.68]	0.446 [11.33]	0.120 [3.05]	------	------	------	0.115 [2.92]
21	1	1.936 [49.17]	1.830 [46.48]	0.384 [9.75]	0.120 [3.05]	------	------	------	0.115 [2.92]
26	1	1.312 [33.32]	1.192 [30.28]	0.572 [14.53]	0.120 [3.05]	------	------	------	------
34	2	1.687 [42.85]	1.389 [35.28]	0.776 [19.71]	0.120 [3.05]	0.125 [3.18]	0.234 [5.94]	------	------
41	1	2.312 [58.72]	2.135 [54.23]	0.446 [11.33]	0.120 [3.05]	------	------	------	------
42	2	2.000 [50.80]	1.682 [42.72]	0.776 [19.71]	0.120 [3.05]	0.125 [3.18]	0.234 [5.94]	------	------
50	2	2.282 [57.96]	1.983 [50.37]	0.776 [19.71]	0.120 [3.05]	0.125 [3.18]	0.234 [5.94]	------	------
66	2	1.968 [49.99]	1.683 [42.75]	1.135 [28.83]	0.120 [3.05]	0.125 [3.18]	------	------	------
75	3	2.282 [57.96]	1.987 [50.47]	1.120 [28.45]	0.120 [3.05]	------	0.234 [5.94]	0.266 [6.76]	------
104	2	2.375 [60.33]	2.058 [52.27]	1.479 [37.57]	0.120 [3.05]	0.145 [3.68]	0.438 [11.13]	------	------

DIMENSIONS ARE IN INCHES [MILLIMETERS].
ALL DIMENSIONS ARE SUBJECT TO CHANGE.

Downloaded from Arrow.com.

GROUNDING PLATES DESIGNED FOR AIRCRAFT APPLICATIONS

Positronic Industries' grounding plates were designed especially for aircraft applications where shielded cable must be grounded to the aircraft frame. The ground wires of the shielded cable are piggy-backed out of the cable with ferrules and are crimped to Size 16 female contacts. The female contacts are loaded into standard 14 or 34 contact connector housings. These connectors can then be mated to the grounding plate which is fastened to the aircraft frame.

Grounding plates have Size 16 precision-machined male contacts which are swaged and soldered onto the metal plate. The metal plates (angled and plane) have fixed female jackscrews that accept the rotating jackscrews, which are an integral part of the mating female connector. Long rotating jackscrews extend beyond the edge of the cable adapter of the 14-contact female connector which permits easy coupling to the grounding plate.

Other contact variants are available for grounding plate applications. Contact the factory for information on the availability of other grounding plates offered by Positronic Industries.

GROUNDING PLATES TECHNICAL CHARACTERISTICS

MATERIALS AND FINISHES:

Insulator:	Glass-filled DAP per MIL-M-14, Type SDG-F. Grey or black in color.
Grounding Plates:	Copper alloy with tin plate.
Contacts:	Copper alloy with 0.000010 inch [0.25 microns] gold over nickel plate.
Jackscrew System:	Stainless steel, passivated.
Strain Reliefs:	Steel with zinc plate and dichromate seal or aluminum with yellow anodize.

MECHANICAL CHARACTERISTICS:

Removable Female Contacts:	Insert contact to rear face of insulator, release from front face of insulator. "Closed Entry" design for highest reliability.
Contact Retention in Insulator:	20 lbs. (89N) after 10 cycles of contact insertion/extraction.
Female Contact Termination:	Crimp wires, Sizes 20 AWG [0.5 mm^2] through 24 AWG [0.25 mm^2].
Jackscrews:	6-32 UNC threads.

ELECTRICAL CHARACTERISTICS:

Contact Current Rating:	13 amperes nominal.
Insulation Resistance:	5 G ohms.
Working Voltage:	500 VAC (rms).
Working Temperature:	-65°C to 150°C.

DIMENSIONS ARE IN INCHES [MILLIMETERS].
ALL DIMENSIONS ARE SUBJECT TO CHANGE.

Downloaded from Arrow.com.

GROUNDING PLATE COMPONENT DESCRIPTION

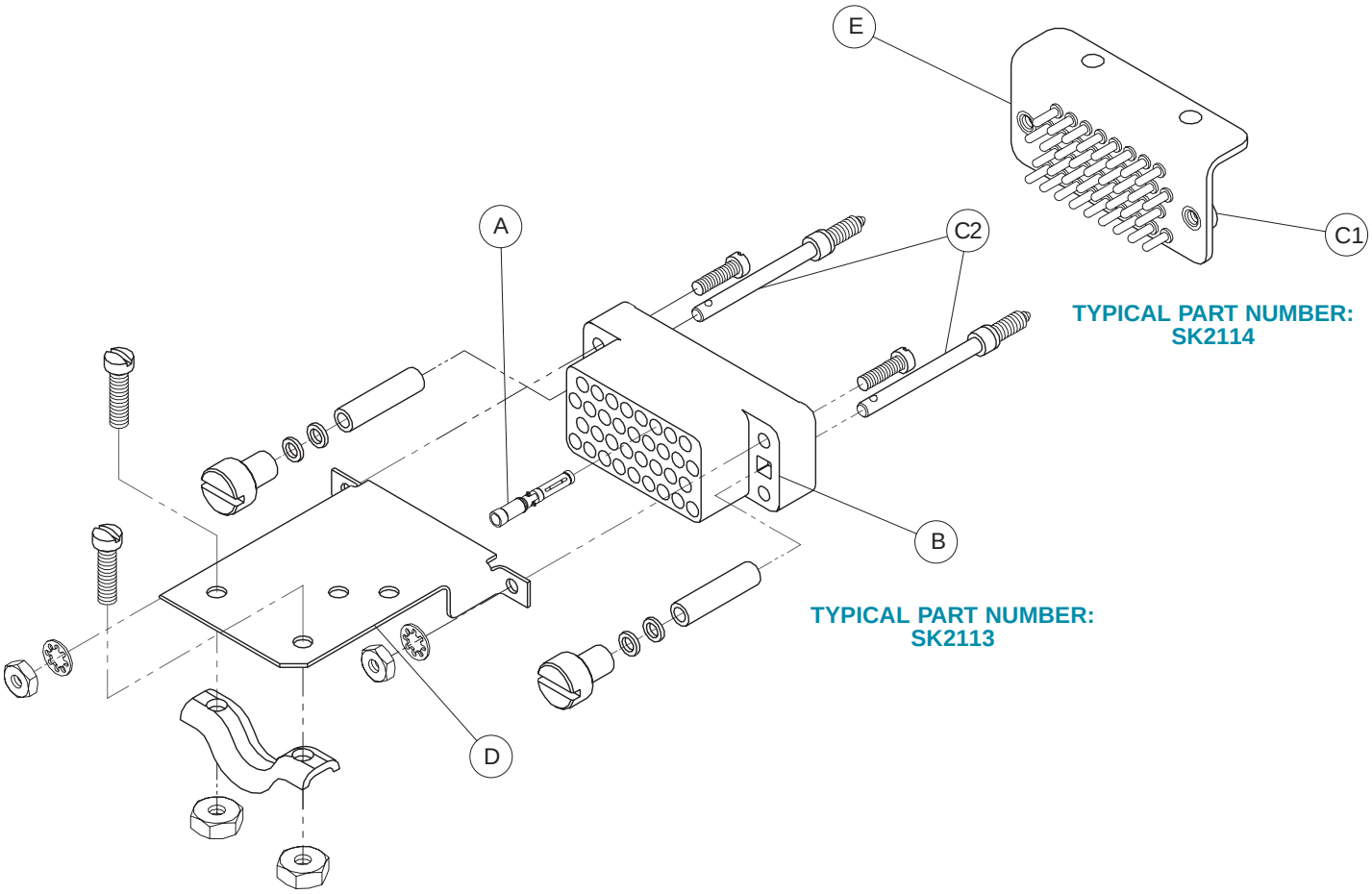

CONNECTOR COMPONENT DESCRIPTIONS	
ITEM	**COMPONENT DESCRIPTIONS**
A	Female Contacts, Size 16, Crimp Terminations.
B	Female Connector Insulator.
C1	Fixed Jackscrew.
C2	Rotating Jackscrew.
D	Strain Relief provides cable support.
E	Grounding Plate.

DIMENSIONS ARE IN INCHES [MILLIMETERS].
ALL DIMENSIONS ARE SUBJECT TO CHANGE.

Downloaded from Arrow.com.

Grounding Plate Ordering Information

Grounding plates are offered in five (5) different configurations, as shown below. These grounding plates can be used with the connector strain relief assemblies shown to the right below. The connector strain relief assemblies are provided with an appropriate number of FC120N2 female contacts. The FC120N2 contacts feature a "Closed Entry" design and accomodate wire sizes 20 - 24 AWG (0.5 - 0.25 mm²). Reference the schematics below for dimensional information. Use the indicated part numbers below to order your grounding plate assemblies from Positronic Industries.

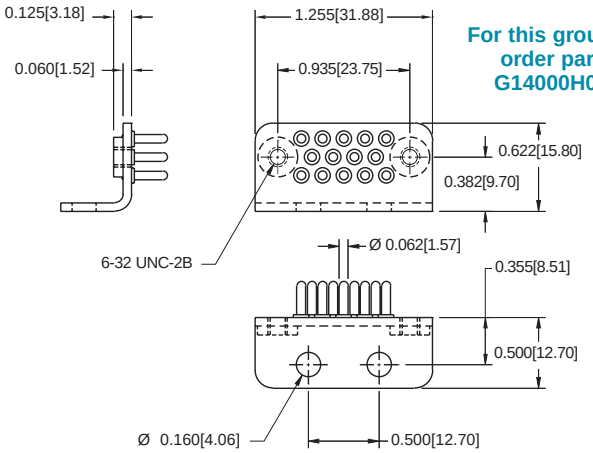

For this grounding plate, order part number: G14000H000-1265.0

For this grounding plate, order part number: SK2484

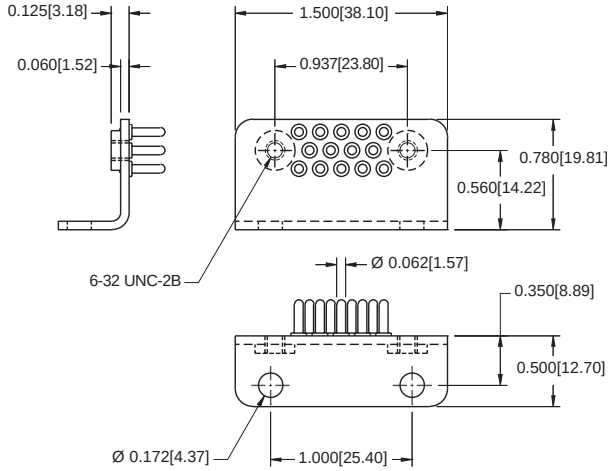

For this grounding plate, order part number: SK2665

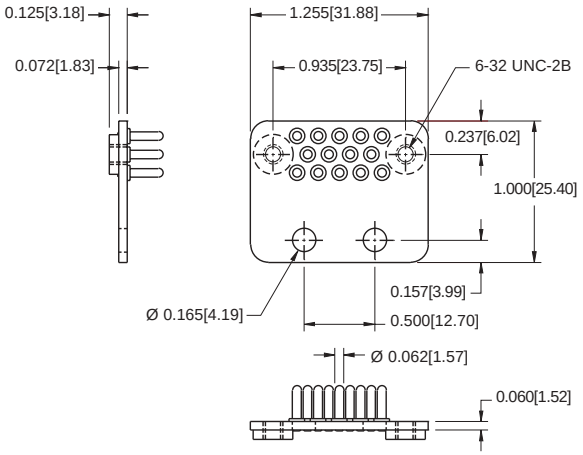

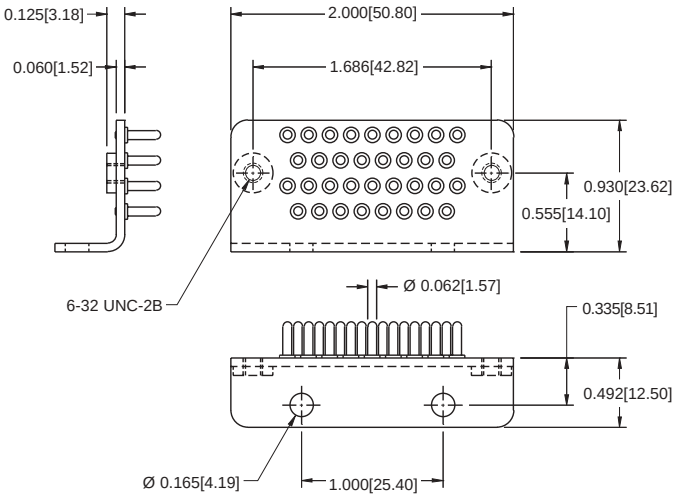

For this grounding plate, order part number: SK2114

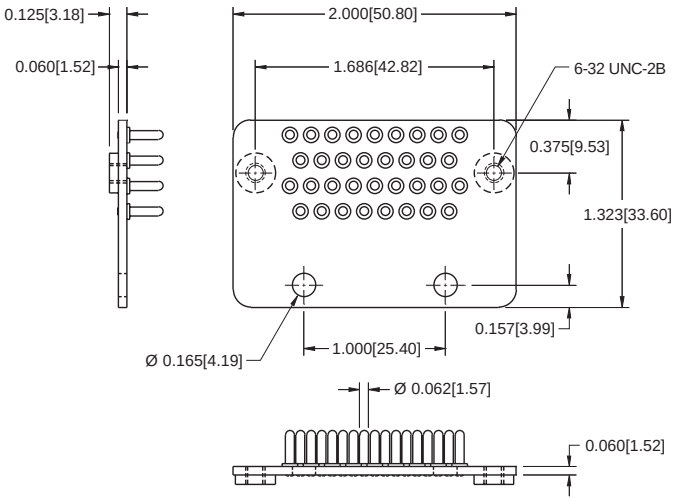

For this grounding plate, order part number: SK2664

DIMENSIONS ARE IN INCHES [MILLIMETERS].
ALL DIMENSIONS ARE SUBJECT TO CHANGE.

Downloaded from Arrow.com.

GROUNDING PLATES DESIGNED FOR AIRCRAFT APPLICATIONS

For this connector strain relief assembly, order part number: GMCT14F0EX00A0-697.0

A plastic cable tie is supplied with this connector.

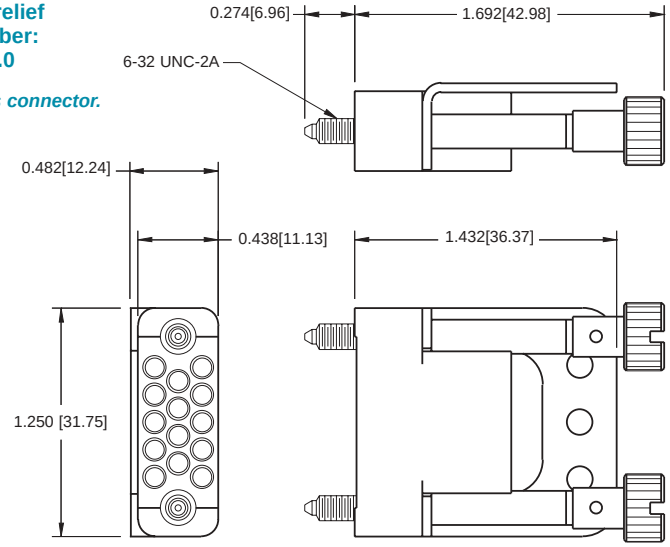

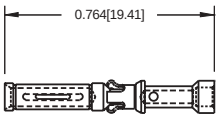

FC120N2 FEMALE CONTACT (“CLOSED ENTRY” DESIGN)

(ENLARGED)

The appropriate number of contacts are supplied with the connectors. These crimp termination contacts accomodate wire sizes 20 - 24 AWG (0.5 - 0.25 mm²). Contact the Positronic factory for crimp tool ordering information.

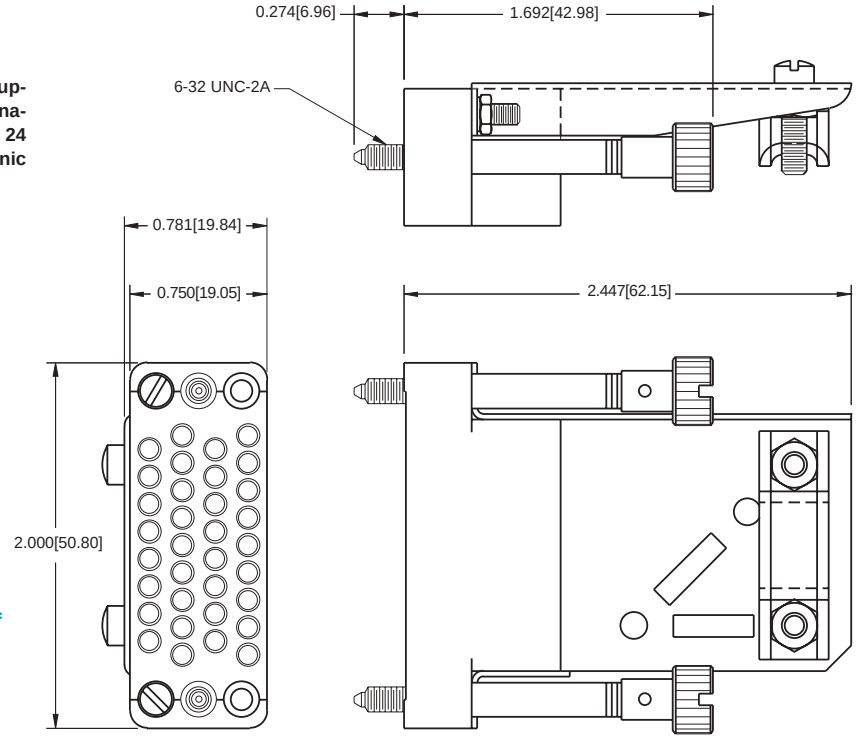

For this connector strain relief assembly, order part number: SK2113

**DIMENSIONS ARE IN INCHES [MILLIMETERS].
ALL DIMENSIONS ARE SUBJECT TO CHANGE.**

Downloaded from Arrow.com.

ORDERING INFORMATION FOR MIL-DTL-28748/3 AND MIL-DTL-28748/4

CHART #1 MALE CONNECTORS

PART NUMBER EXPLANATIONS

M28748/3	B	B	1	A	S	1A

Step 1 – Basic Part Number M28748/3

Step 2 – Shell Hardware
A - Long Jackscrew Hardware Only
B - All Other Hardware
- - Insert Only (No Hardware)

Step 3 – Insert Size
B - 9 Contact Variant
C - 14 Contact Variant
D - 20 Contact Variant
E - 26 Contact Variant
F - 34 Contact Variant
G - 42 Contact Variant
H - 50 Contact Variant
J - 66 Contact Variant
K - 75 Contact Variant
L - 104 Contact Variant

Step 4 – Shield/Retaining Plate
Shield
1 - Top Opening Hood
2 - Side Opening Hood
5 - Top Opening Hood (Size 66/104)
6 - Side Opening Hood (Size 66/104)
0 - None

Retaining Plate
P

Step 5– Shell
A - A (Polarized Plug)
B - B (Polarized Plug)
C - C (Polarized Plug)
D - D (Polarized Plug)
E - E (Polarized Plug)
F - F (Polarized Plug)
G - G (Polarized Plug)
H - Unpolarized Plug
J - A (Polarized Receptacle)
K - B (Polarized Receptacle)
L - C (Polarized Receptacle)
M - D (Polarized Receptacle)
N - E (Polarized Receptacle)
P - F (Polarized Receptacle)
Q - G (Polarized Receptacle)
R - Unpolarized Receptacle
0 - None

Step 6 – Jackscrews/Guide Pins
M - Long Jackscrews/Shields Only
S - Short Jackscrews/No Shield
F - Fixed Jackscrews/No Shield
G - Guide Pin/No Shield
0 - None Included

Step 7 – Contacts (SEE CHART 5)

CHART #2 FEMALE CONNECTORS

PART NUMBER EXPLANATIONS

M28748/4	B	B	1	A	S	1A

Step 1 – Basic Part Number M28748/4

Step 2 – Shell Hardware
A - Long Jackscrew Hardware Only
B - All Other Hardware
- - Insert Only (No Hardware)

Step 3 – Insert Size
B - 9 Contact Variant
C - 14 Contact Variant
D - 20 Contact Variant
E - 26 Contact Variant
F - 34 Contact Variant
G - 42 Contact Variant
H - 50 Contact Variant
J - 66 Contact Variant
K - 75 Contact Variant
L - 104 Contact Variant

Step 4 – Shield/Retaining Plate
Retaining Plate
P

Shield
1 - Top Opening Hood
2 - Side Opening Hood
5 - Top Opening Hood (Size 66 and 104)
6 - Side Opening Hood (Size 66 and 104)
0 - None

Step 5– Shell
A - A (Polarized Plug)
B - B (Polarized Plug)
C - C (Polarized Plug)
D - D (Polarized Plug)
E - E (Polarized Plug)
F - F (Polarized Plug)
G - G (Polarized Plug)
H - Unpolarized Plug
J - A (Polarized Receptacle)
K - B (Polarized Receptacle)
L - C (Polarized Receptacle)
M - D (Polarized Receptacle)
N - E (Polarized Receptacle)
P - F (Polarized Receptacle)
Q - G (Polarized Receptacle)
R - Unpolarized Receptacle
0 - None

Step 6 – Jackscrews/Guide Pins
M - Long Jackscrews/Shields Only
S - Short Jackscrew/No Shield
F - Fixed Jackscrew/No Shield
G - Guide Pin/No Shield
0 - None

Step 7 – Contacts (SEE CHART 6)

See GMCT Series Connectors pages 1-21 and Accessories pages 44-58

CHART #3 MALE CONNECTORS

PART NUMBER EXPLANATIONS

M28748/5	B	C	0	0	S	1A

Step 1 – Basic Part Number M28748/5

Step 2 – Shell Hardware
A - Long Jackscrew Hardware Only
B - All Other Hardware
- - Insert Only (No Hardware)

Step 3 – Insert Size
A - 7 Contact Variant
B - 9 Contact Variant
C - 14 Contact Variant
D - 20 Contact Variant
E - 26 Contact Variant
F - 34 Contact Variant
G - 42 Contact Variant
H - 50 Contact Variant
J - 75 Contact Variant
K - 104 Contact Variant
0 - None
Q - 34 Contact Variant (Through Hole, Long Jackscrews)
P - 42 Contact Variant (Through Hole, Long Jackscrews)
N - 50 Contact Variant (Through Hole, Long Jackscrews)
M - 75 Contact Variant (Through Hole, Long Jackscrews)
L - 104 Contact Variant (Through Hole, Long Jackscrews)
R - 7 Contact Variant (No Insert)
S - 9 Contact Variant (No Insert)
T - 14 Contact Variant (No Insert)
U - 20 Contact Variant (No Insert)
V - 26 Contact Variant (No Insert)
W - 34 Contact Variant (No Insert)
Y - 42 Contact Variant (No Insert)
1 - 50 Contact Variant (No Insert)
3 - 75 Contact Variant (No Insert)
5 - 104 Contact Variant (No Insert)
X - 34 Contact Variant (No Insert, Through Hole, Long Jackscrews)
Z - 42 Contact Variant (No Insert, Through Hole, Long Jackscrews)
2 - 50 Contact Variant (No Insert, Through Hole, Long Jackscrews)
4 - 75 Contact Variant (No Insert, Through Hole, Long Jackscrews)
6 - 104 Contact Variant (No Insert, Through Hole, Long Jackscrews)

Step 4 – Shield/Retaining Plate
Shield
1 - Top Opening (With Shell)
2 - Side Opening (With Shell)
3 - Top Opening
4 - Side Opening
0 - None
Retaining Plate
A - Size 9
B - Size 14
C - Size 20
D - Size 26
F - Size 34
H - Size 50
J - Size 75
K - Size 104
0 - None

Step 5– Shell
A - A (Polarized Receptacle)
B - B (Polarized Receptacle)
C - C (Polarized Receptacle)
D - D (Polarized Receptacle)
E - E (Polarized Receptacle)
F - F (Polarized Receptacle)
G - G (Polarized Receptacle)
H - Unpolarized Receptacle
J - A (Polarized Plug)
K - B (Polarized Plug)
L - C (Polarized Plug)
M - D (Polarized Plug)
N - E (Polarized Plug)
P - F (Polarized Plug)
Q - G (Polarized Plug)
R - Unpolarized Plug
0 - None

Step 6 – Jackscrews/Guide Pins
M - Long Jackscrews (Shields Only)
L - Long Jackscrews (One Piece, Shields Only)
S - Short Jackscrews (No Shield)
F - Fixed Jackscrews (No Shield)
G - Guide Pins (No Shield)
0 - None

Step 7 – Contacts
1A - Size 20 Contacts
1L - None

CHART #4 FEMALE CONNECTORS

PART NUMBER EXPLANATIONS

M28748/6	B	C	0	0	S	1A

Step 1 – Basic Part Number M28748/6

Step 2 – Shell Hardware
A - Long Jackscrew Hardware Only
B - All Other Hardware
- - Insert Only (No Hardware)

Step 3 – Insert Size
A - 7 Contact Variant
B - 9 Contact Variant
C - 14 Contact Variant
D - 20 Contact Variant
E - 26 Contact Variant
F - 34 Contact Variant
G - 42 Contact Variant
H - 50 Contact Variant
J - 75 Contact Variant
K - 104 Contact Variant
0 - None
Q - 34 Contact Variant (Through Hole, Long Jackscrews)
P - 42 Contact Variant (Through Hole, Long Jackscrews)
N - 50 Contact Variant (Through Hole, Long Jackscrews)
M - 75 Contact Variant (Through Hole, Long Jackscrews)
L - 104 Contact Variant (Through Hole, Long Jackscrews)
R - 7 Contact Variant (No Insert)
S - 9 Contact Variant (No Insert)
T - 14 Contact Variant (No Insert)
U - 20 Contact Variant (No Insert)
V - 26 Contact Variant (No Insert)
W - 34 Contact Variant (No Insert)
Y - 42 Contact Variant (No Insert)
1 - 50 Contact Variant (No Insert)
3 - 75 Contact Variant (No Insert)
5 - 104 Contact Variant (No Insert)
X - 34 Contact Variant (No Insert, Through Hole, Long Jackscrews)
Z - 42 Contact Variant (No Insert, Through Hole, Long Jackscrews)
2 - 50 Contact Variant (No Insert, Through Hole, Long Jackscrews)
4 - 75 Contact Variant (No Insert, Through Hole, Long Jackscrews)
6 - 104 Contact Variant (No Insert, Through Hole, Long Jackscrews)

Step 4 – Shield/Retaining Plate
Shield
1 - Top Opening (With Shell)
2 - Side Opening (With Shell)
3 - Top Opening
4 - Side Opening
0 - None
Retaining Plate
A - Size 9
B - Size 14
C - Size 20
D - Size 26
F - Size 34
H - Size 50
J - Size 75
K - Size 104
0 - None

Step 5– Shell
A - A (Polarized Receptacle)
B - B (Polarized Receptacle
C - C (Polarized Receptacle)
D - D (Polarized Receptacle)
E - E (Polarized Receptacle)
F - F (Polarized Receptacle)
G - G (Polarized Receptacle)
H - Unpolarized Receptacle
J - A (Polarized Plug)
K - B (Polarized Plug)
L - C (Polarized Plug)
M - D (Polarized Plug)
N - E (Polarized Plug)
P - F (Polarized Plug)
Q - G (Polarized Plug)
R - Unpolarized Plug
0 - None

Step 6 – Jackscrews/Guide Pins
M - Long Jackscrews (Shields Only)
L - Long Jackscrews (One Piece, Shields Only)
S - Short Jackscrews (No Shield)
F - Fixed Jackscrews (No Shield)
G - Guide Pins (No Shield)
0 - None

Step 7 – Contacts
1A - Size 20 Contacts
1L - None

See GM Series Connectors pages 38-43 and Accessories pages 44-58

Q.P.L. LISTING

DIMENSIONS ARE IN INCHES [MILLIMETERS].
ALL DIMENSIONS ARE SUBJECT TO CHANGE.

Downloaded from Arrow.com.

ORDERING INFORMATION FOR MIL-DTL-28748/3 AND MIL-DTL-28748/4

CHART #5

CONTACT SIZE PERCENT (FOR M28748/3 CONNECTORS)			
CONTACT	SIZE 16-16 M39029/34-273	SIZE 16-20 M39029/34-272	SIZE 20-20 M39029/34-271
1A	100	0	0
1B	90	0	0
1C	80	0	0
1D	70	0	0
1E	60	0	0
1F	50	0	0
1G	40	0	0
1H	30	0	0
1J	20	0	0
1K	10	0	0
1L	0	0	0
2A	0	100	0
2B	0	90	0
2C	0	80	0
2D	0	70	0
2E	0	60	0
2F	0	50	0
2G	0	40	0
2H	0	30	0
2J	0	20	0
2K	0	10	0
3A	0	0	100
3B	0	0	90
3C	0	0	80
3D	0	0	70
3E	0	0	60
3F	0	0	50
3G	0	0	40
3H	0	0	30
3J	0	0	20
3K	0	0	10

CHART #6

CONTACT SIZE PERCENT (FOR M28748/4 CONNECTORS)			
CONTACT	SIZE 16-16 M39029/35-276	SIZE 16-20 M39029/35-275	SIZE 20-20 M39029/35-274
1A	100	0	0
1B	90	0	0
1C	80	0	0
1D	70	0	0
1E	60	0	0
1F	50	0	0
1G	40	0	0
1H	30	0	0
1J	20	0	0
1K	10	0	0
1L	0	0	0
2A	0	100	0
2B	0	90	0
2C	0	80	0
2D	0	70	0
2E	0	60	0
2F	0	50	0
2G	0	40	0
2H	0	30	0
2J	0	20	0
2K	0	10	0
3A	0	0	100
3B	0	0	90
3C	0	0	80
3D	0	0	70
3E	0	0	60
3F	0	0	50
3G	0	0	40
3H	0	0	30
3J	0	0	20
3K	0	0	10

See GMCT Series Contacts Pages 7-17.

Downloaded from Arrow.com.

MIL-DTL-28748 & MIL-C-39029 QUALIFIED PRODUCTS LISTING

Positronic Industries offers the listing below of connectors and connector accessories, which are products qualified under Military Specifications MIL-DTL-28748 and MIL-C-39029. For additional Q.P.L. connectors, please consult the factory sales office.
Positronic GMCT series connectors are Q.P.L. approved to MIL-DTL-28748 per test report number 28748-1228-84.
Positronic GMCT series crimp removable contacts are Q.P.L. approved to MIL-C-39029 per test report number 39029-1131-84.
Positronic GM series connectors are Q.P.L. approved to MIL-DTL-28748 per test report number 28748-1229-84.

MILITARY PART NUMBER	MILITARY PART NUMBER	MILITARY PART NUMBER	MILITARY PART NUMBER	MILITARY PART NUMBER
M28748/3ABXXM*	M28748/3BHXXG*	M28748/4BEXXS*	M28748/4-LXX0*	M28748/6BB00S1A
M28748/3BBXXS*	M28748/3-HXX0*	M28748/4BEXXF*	M28748/5BA00S1A	M28748/6BB00F1A
M28748/3BBXXF*	M28748/3AJXXM*	M28748/4BEXXG*	M28748/5BA00F1A	M28748/6BB00G1A
M28748/3BBXXG*	M28748/3BJXXS*	M28748/4-EXX0*	M28748/5BA00G1A	M28748/6-B0001A
M28748/3-BXX0*	M28748/3BJXXF*	M28748/4AFXXM*	M28748/5-A0001A	M28748/6BC00S1A
M28748/3ACXXM*	M28748/3BJXXG*	M28748/4BFXXS*	M28748/5BB00S1A	M28748/6BC00F1A
M28748/3BCXXS*	M28748/3-JXX0*	M28748/4BFXXF*	M28748/5BB00F1A	M28748/6BC00G1A
M28748/3BCXXF*	M28748/3AKXXM*	M28748/4BFXXG*	M28748/5BB00G1A	M28748/6-C0001A
M28748/3BCXXG*	M28748/3BKXXS*	M28748/4-FXX0*	M28748/5-B0001A	M28748/6BD00S1A
M28748/3-CXX0*	M28748/3BKXXF*	M28748/4AGXXM*	M28748/5BC00S1A	M28748/6BD00F1A
M28748/3ADXXM*	M28748/3BKXXG*	M28748/4BGXXS*	M28748/5BC00F1A	M28748/6BD00G1A
M28748/3BDXXS*	M28748/3-KXX0*	M28748/4BGXXF*	M28748/5BC00G1A	M28748/6-D0001A
M28748/3BDXXF*	M28748/3ALXXM*	M28748/4BGXXG*	M28748/5-C0001A	M28748/6BE00S1A
M28748/3BDXXG*	M28748/3BLXXS*	M28748/4-GXX0*	M28748/5BD00S1A	M28748/6BE00F1A
M28748/3-DXX0*	M28748/3BLXXF*	M28748/4AHXXM*	M28748/5BD00F1A	M28748/6BE00G1A
M28748/3AEXXM*	M28748/3BLXXG*	M28748/4BHXXS*	M28748/5BD00G1A	M28748/6-E0001A
M28748/3BEXXS*	M28748/3-LXX0*	M28748/4BHXXF*	M28748/5-D0001A	M28748/6BF00S1A
M28748/3BEXXF*	M28748/4ABXXM*	M28748/4BHXXG*	M28748/5BE00S1A	M28748/6BF00F1A
M28748/3BEXXG*	M28748/4BBXXS*	M28748/4-HXX0*	M28748/5BE00F1A	M28748/6BF00G1A
M28748/3-EXX0*	M28748/4BBXXF*	M28748/4AJXXM*	M28748/5BE00G1A	M28748/6-F0001A
M28748/3AFXXM*	M28748/4BBXXG*	M28748/4BJXXS*	M28748/5-E0001A	M28748/6BH00S1A
M28748/3BFXXS*	M28748/4-BXX0*	M28748/4BJXXF*	M28748/5BF00S1A	M28748/6BH00F1A
M28748/3BFXXF*	M28748/4ACXXM*	M28748/4BJXXG*	M28748/5BF00F1A	M28748/6BH00G1A
M28748/3BFXXG*	M28748/4BCXXS*	M28748/4-JXX0*	M28748/5BF00G1A	M28748/6-H0001A
M28748/3-FXX0*	M28748/4BCXXF*	M28748/4AKXXM*	M28748/5-F0001A	M39029/34-271
M28748/3AGXXM*	M28748/4BCXXG*	M28748/4BKXXS*	M28748/5BH00S1A	M39029/34-272
M28748/3BGXXS*	M28748/4-CXX0*	M28748/4BKXXF*	M28748/5BH00F1A	M39029/34-273
M28748/3BGXXF*	M28748/4ADXXM*	M28748/4BKXXG*	M28748/5BH00G1A	M39029/35-274
M28748/3BGXXG*	M28748/4BDXXS*	M28748/4-KXX0*	M28748/5-H0001A	M39029/35-275
M28748/3-GXX0*	M28748/4BDXXF*	M28748/4ALXXM*	M28748/6BA00S1A	M39029/35-276
M28748/3AHXXM*	M28748/4BDXXG*	M28748/4BLXXS*	M28748/6BA00F1A	
M28748/3BHXXS*	M28748/4-DXX0*	M28748/4BLXXF*	M28748/6BA00G1A	
M28748/3BHXXF*	M28748/4AEXXM*	M28748/4BLXXG*	M28748/6-A0001A	

XX Refer to charts #1 or #2 as applicable
* Refer to charts #5 or #6 as applicable

DIMENSIONS ARE IN INCHES [MILLIMETERS].
ALL DIMENSIONS ARE SUBJECT TO CHANGE.

Downloaded from Arrow.com.

Positronic Products

Power

Contact Sizes: 0, 8, 12, 16, 20 and 22
Current Ratings: To 150 amperes
Terminations: Crimp, wire solder, straight solder, right angle solder, straight press-fit and right angle press-fit
Configurations: Multiple variants in a variety of package sizes
Compliance: PICMG 2.11, PICMG 3.0, VITA 41

FEATURES: Hot swap capability • AC/DC operation in a single connector • Signal contacts for hardware management • Blind mating • Sequential mating • Large Surface Area Contact Mating System • Wide variety of accessories • Customer specified contact arrangements

D-Subminiature

Contact Sizes: 8, 20 and 22
Current Ratings: To 40 amperes nominal
Terminations: Crimp, wire solder, straight solder, right angle solder and straight press-fit
Configurations: Multiple variants in both standard and high densities
Qualifications: MIL-DTL-24308, Goddard Space Flight 311P, MIL-C-39029, IP65, IP67

FEATURES: Three performance levels available: professional quality, military quality and space-flight quality provide multiple performance to cost choices • Options include thermocouple contacts, filtered, environmentally sealed and dual port package including mixed density • Broad selection of accessories

Rectangular

Contact Sizes: 16, 20 and 22
Current Ratings: To 13 amperes
Terminations: Crimp, wire solder, straight solder and right angle solder
Configurations: Multiple variants in both standard and high densities
Qualifications: MIL-DTL-28748, MIL-C-39029, CCITT V.35

FEATURES: Two performance levels available: industrial quality and military quality provide two performance to cost choices • Large Surface Area Contact Mating System • A wide variety of accessories • Broad selection of contact variants and package sizes

Circular

Contact Sizes: 12, 16, 20 and 22
Current Ratings: To 25 amperes nominal
Terminations: Crimp, wire solder, straight solder and right angle solder
Configurations: Multiple variants in two package sizes
Qualifications: Environmental protection to IP67

FEATURES: Non-corrodible / lightweight composite construction • EMI/RFI shielded versions • Thermocouple contacts • Environmentally sealed versions • Rear insertion/ front release of removable contacts • Two level sequential mating • Overmolding available on full assemblies

Cable

All Positronic connector products can be supplied as part of cable assemblies whose technical characteristics would reflect those of the connectors being used within the assembly.

FEATURES: Shorten the supply chain and reduce additional costs and delays by “cablizing” • Overmolding available • Shielded and environmentally sealed versions available • Power cables and access boxes which meet the SAE J2496 specification

Hermetic

Contact Sizes: 8, 12, 16, 20 and 22
Current Ratings: To 40 amperes nominal
Terminations: Feed through is standard; flying leads and board mount available upon request
Configurations: See D-Subminiature and Circular Configurations above
Qualifications: Space-D32

FEATURES: Intended for use as an electrical feedthrough in high vacuum applications • Leakage rate: 1 x 10-9 mbar.l/s • Signal, power, coax and high voltage versions available • Connectors can be mounted on flange assembly per customer specification

For more information, visit www.connectpositronic.com or call your nearest Positronic sales office as given on the back of this catalog.

Downloaded from Arrow.com.

NORTH AMERICAN HEADQUARTERS

UNITED STATES, Springfield, Missouri

Factory Sales and Engineering Offices	(800) 641-4054

PUERTO RICO, Ponce Factory

Factory Sales and Engineering Offices	(800) 641-4054

MEXICO

Factory Sales and Engineering Offices	(800) 872-7674

CANADA

Factory Sales and Engineering Offices	(800) 327-8272

PACIFIC BASIN HEADQUARTERS

SINGAPORE

Factory Sales and Engineering Offices	65-6842-1419

ASIA, Direct Sales Offices

Taiwan Sales Office	8862-2937-8775
Japan Sales Office	813-5661-3047
India Sales Office	91-98220-11175

ASIA-PACIFIC, Technical Agents

Technical Agents in China: Shenzhen, Shanghai, Chengdu, Beijing; Korea, Malaysia: Penang; Australia, New Zealand, Philippines, Hong Kong, Thailand, Sri Lanka, Pakistan, Cambodia

EUROPEAN HEADQUARTERS

FRANCE, Auch Factory

Factory Sales and Engineering Offices	33 (0)5 62 63 44 91

EUROPE, Direct Sales Offices

Northern France Sales Office	33 (0)1 45 88 13 88
Southern France Sales Office	33 (0)4 67 72 80 28
Italy Sales Office	39 (0)2 54 116 106
Germany Sales Office	49 (0)2351 63 47 39

EUROPE, Technical Agents

Technical Agents in Austria, Benelux, Denmark, Finland, Greece, Ireland, Scotland, Slovenia, Spain, Sweden, Switzerland and the United Kingdom

MIDEAST, Technical Agents

Technical Agents in Israel and Turkey

POSITRONIC INDUSTRIES, INC.
423 N Campbell Ave • PO Box 8247 • Springfield, MO 65801
Tel (417) 866-2322 • Fax (417) 866-4115 • Toll Free (800) 641-4054
info@connectpositronic.com

POSITRONIC INDUSTRIES, S.A.S.
Zone Industrielle d'Engachies • 46 Route d'Engachies
France 32020 Auch Cedex 9
Telephone 33 (0)5 62 63 44 91 • Fax 33 (0)5 62 63 51 17
contact@connectpositronic.com

POSITRONIC ASIA PTE LTD.
3014A Ubi Road 1 #07-01 • Singapore 408703
Telephone (656) 842 1419 • Fax (656) 842 1421
singapore@connectpositronic.com

Downloaded from Arrow.com.