REVISIONS					
REV	ECO	DESCRIPTION	DATE	BY	APPR
B1	-	RELEASE NEW DWG FORMAT	08/14/14	DRACK	TOMMY

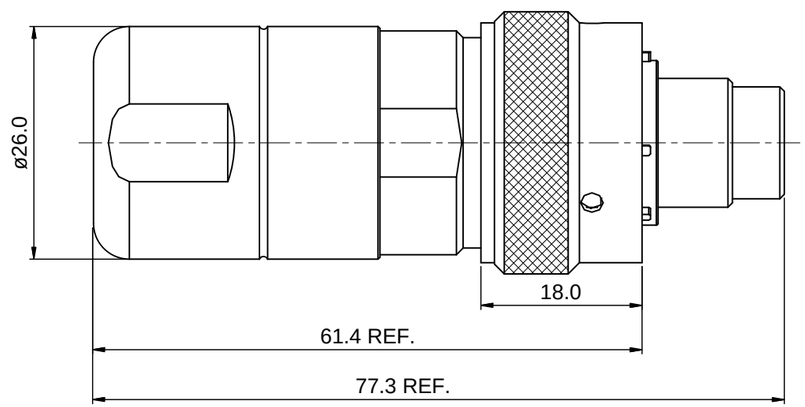

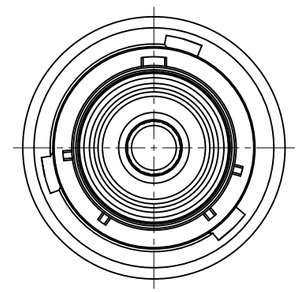

NOTES:

1. MATERIAL:
   - 1.1 HOUSING BODY: ZINC DIE-CAST, NICKEL PLATED
   - 1.2 COUPLING NUT: AL ALLOY, NICKEL PLATED
   - 1.3 INSULATION INSERT: PA66,UL94 V0
   - 1.4 CONTACT: COPPER ALLOY, SILVER PLATED
   - 1.5 SEAL: SILICONE RUBBER
2. SPECIFICATIONS:
   - 2.1 CURRENT RATING: 120 AMPS MAX.
   - 2.2 VOLTAGE RATING: 630 V AC/DC
   - 2.3 OPERATING TEMPERATURE: -40°C TO +125°C
   - 2.4 DIELECTRIC WITHSTANDING VOLTAGE:
     LESS THAN 2 MILLIAMPS CURRENT IEAKAGE @ 5000 VOLTS AC
   - 2.5 DEGREE OF PROTECTION: IP67 (MATED CONDITION)
   - 2.6 DEGREE OF POLLUTION: 3 PER UL840
   - 2.7 OVERVOLTAGE CATEGORY: III PER UL840
   - 2.8 MATING CYCLE DURABILITY: >100 CYCLES
   - 2.9 RoHS COMPLIANT
3. ALL DIMENSIONS ARE FOR REFERENCE USE ONLY.
4. "*" DENOTE KEY POSTION OF "N","W","X","Y" OR "Z".
5. CONTACT P/N: HS25BCS

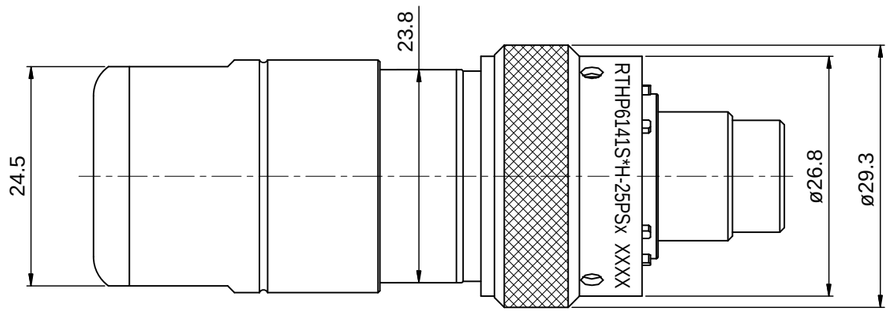

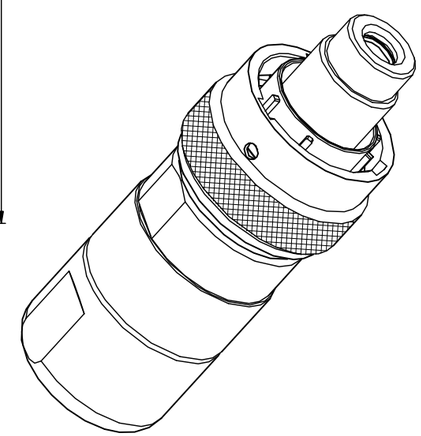

KEY POS	PART NO.	Cable OD Range
N	RTHP6141SNH-25PS2	13.5~14.0 mm
W	RTHP6141SWH-25PS2	
X	RTHP6141SXH-25PS2	
Y	RTHP6141SYH-25PS2	
Z	RTHP6141SZH-25PS2	

QUANTITY	PART NUMBER	DESCRIPTION	ITEM
	SEE PART NUMBER CHART		

MATERIALS LIST

UNLESS OTHERWISE SPECIFIED
1) All dimensions are in metric(mm).
2) Tolerances are as follows:
1 PL DEC ±0.30 | Fractions ±1/64
2 PL DEC ±0.15 | Angles ±1°
3 PL DEC ±0.08
3) Note reference = X

MATERIAL SPECIFICATIONS:

PROCESS SPECIFICATIONS:

NEXT ASS'Y:

SIGNATURES		DATE
DRAWN:	Drack	08/14/14
CHECKED:		
ENGINEER:		
APPROVAL:		
CUSTOMER:		

THIS DRAWING IS SUPPLIED FOR INFORMATION ONLY. DESIGN FEATURES, SPECIFICATIONS AND PERFORMANCE DATA SHOWN HEREON ARE THE PROPERTY OF THE AMPHENOL CORPORATION. NO RIGHTS OF REPRODUCTION ARE IMPLIED. ALL DIMENSIONS ARE SUBJECT TO NORMAL MANUFACTURING VARIATIONS.

Amphenol

Sine Systems - www.amphenol-sine.com
44724 Morley Drive
Clinton Township, MI 48036

ECO-MATE,PLUG,6mm RADSOK,
CRIMP TYPE,SHIELDING,CORD GRIP

SIZE	TYPE	DWG NO:	REVISION
B	C-	RTHP6141S*H-25PSx	B1

SCALE: 3 : 2 SHEET 1 OF 1

TITLE: ECO-MATE,PLUG,6mm RADSOK,CRIMP TYPE,SHIELDING,CORD GRIP
DWG NO: RTHP6141S*H-25PSx
REV: B1
SH: 1
OF: 1

Downloaded from Arrow.com.