THIS DRAWING CONTAINS INFORMATION PROPRIETARY TO POSITRONIC AND IT'S SUBSIDIARIES. POSITRONIC BELIEVES THE DATA ON THIS DRAWING TO BE RELIABLE, SINCE THE TECHNICAL INFORMATION IS GIVEN FREE OF CHARGE, THE USER EMPLOYS SUCH INFORMATION AT HIS OWN DISCRETION AND RISK. POSITRONIC ASSUMES NO RESPONSIBILITY FOR RESULTS OBTAINED OR DAMAGES INCURRED FROM USE OF SUCH INFORMATION IN WHOLE OR IN PART.

SK11413

DATE	REV	REVISION RECORD	APP	DR	CK
4-05-10	NC	ECO 32327	TK	BS	TK
1-31-12	A	ECO 35107	COLE	MP	COLE

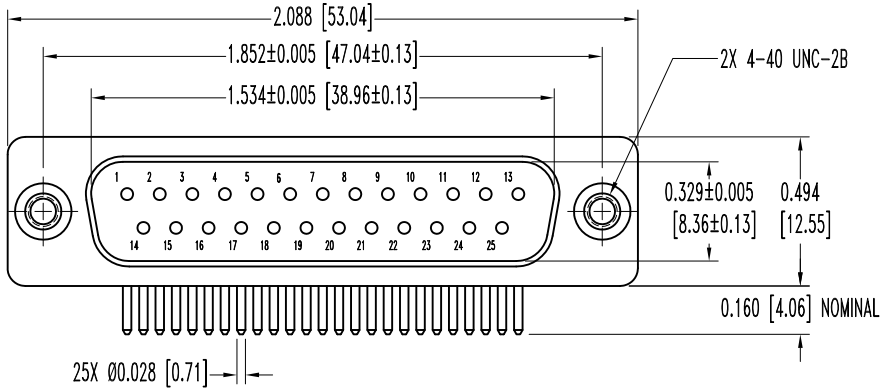

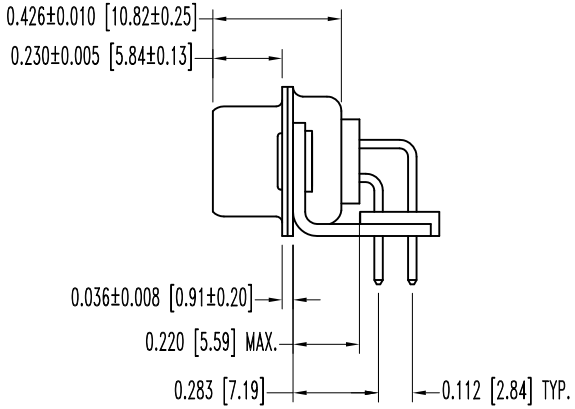

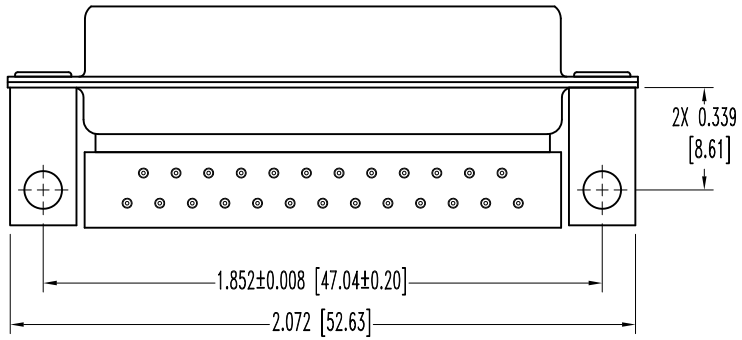

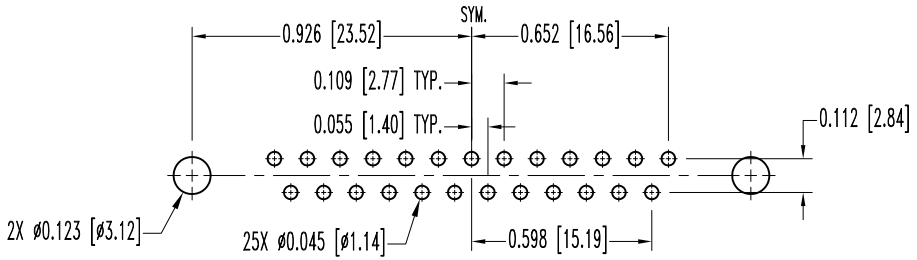

CONTACT HOLE PATTERN

NOTES:

1. MATERIALS AND FINISHES:
   INSULATOR: GLASS FILLED DAP PER ASTM-D-5948, SDG-F, UL 94V-0, COLOR: GREEN.
   CONTACTS: PRECISION MACHINED COPPER ALLOY, GOLD FLASH OVER NICKEL PLATE.
   SHELLS: STEEL, ZINC PLATE WITH CHROMATE SEAL.
   MOUNTING BRACKETS: BRASS, ZINC PLATE WITH CHROMATE SEAL.
   RIVETS: STEEL, ZINC PLATE WITH CHROMATE SEAL.
2. DETAILED PRODUCT, MECHANICAL, AND ELECTRICAL INFORMATION IS AVAILABLE IN THE LATEST STANDARD DENSITY D-SUB PRODUCT PUBLICATION. VISIT CONNECTPOSITRONIC.COM/PRODUCTS/45/STANDARDDENSITYD-SUBMINIATURE OR CONNECTPOSITRONIC.COM.
3. DIMENSIONS ARE IN INCHES [MILLIMETERS].

POSITRONIC INDUSTRIES INC.
www.connectpositronic.com
FSCM 28198

DECIMAL TOL. ±0.015 [0.38]
ANGULAR TOL. ±5°

HDC SERIES

SCALE N.T.S.
DRAWN BY B SHELLEDY
APPROVED BY T KEPLEY

TITLE
HDC25M5R7000

DATE 4-05-10
DRAWING NUMBER SK11413
REV. A

Downloaded from Arrow.com.