PRODUCT NUMBER: 142-90-320-00-592000

www.mill-max.com
DATA SHEET

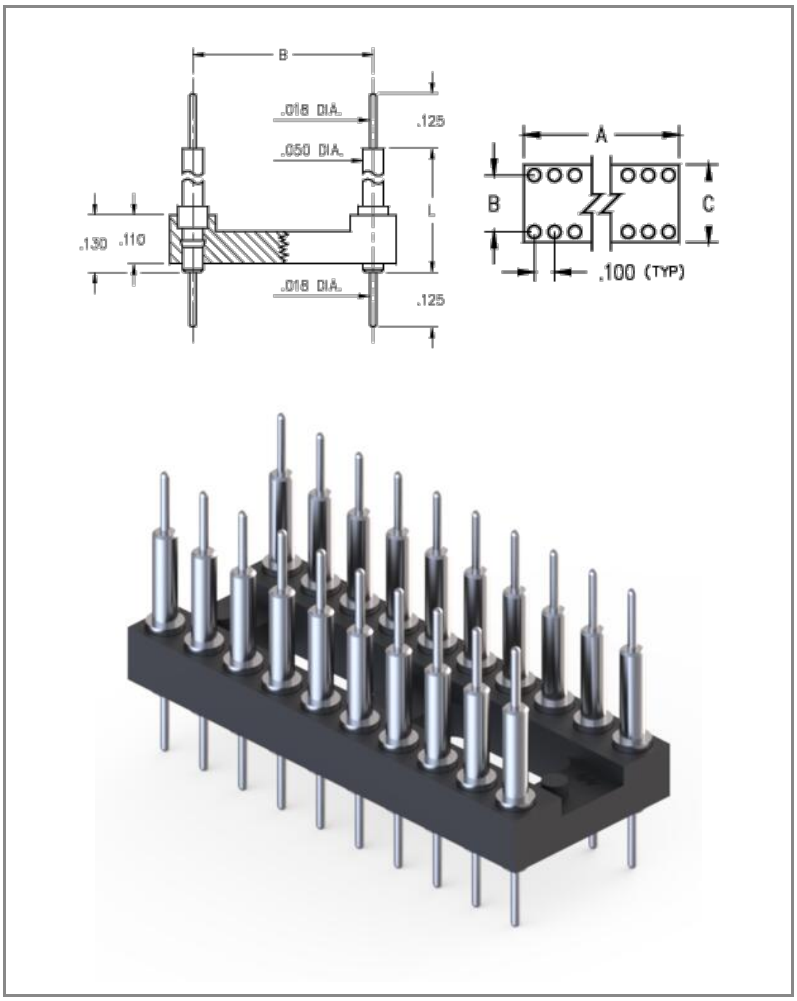

General Info	
Description[1]:	Board Stacking DIP Header .018" (0,457mm) Pin Head
Type:	DIP
Category:	Dual In Line Header
Mounting Style:	Through Hole Solder Mount
Tail Type:	Solder Tail
# Pins:	20
Packaging:	Packaged in Tubes
Qty Tube:	40
Frame Type:	Open Frame
Head Type:	Pin Head
ECCN:	Contact Factory
HTSUS:	8536.90.4040
Product Lifecycle:	Active
Country Of Origin:	USA

(c)2025 Mill-Max Mfg Corp. | 516-922-6000
190 Pine Hollow Road, Oyster Bay, NY 11771

Downloaded from Arrow.com.

142-90-320-00-592000- SPECIFICATIONS

Environmental Specs	
Temperature Range[2]:	-55/+125° C
Moisture Sensitivity Level (MSL):	1 (Unlimited)
REACH Status:	REACH Unaffected

Mechanical Specs	
Mounting Hole:	.022" (0,559mm)

Materials	
Loose Pin/Receptacle # (Material):	4259 (Brass Alloy)
Shell Plating:	200 µ" Tin/Lead(93/7) over 100 µ" Nickel
Inner Plating:	
Insulator Material:	High Temp Thermoplastic

Technical Specs	
Pitch:	.100" (2,540mm)
A Dim:	1" (25,400mm)
B Dim:	.300" (7,620mm)
C Dim:	.400" (10,160mm)
L Dim:	.335" (8,509mm)

Electrical Specs	
Current Rating[3]:	Application Specific
Rated Voltage:	100 VRMS/150 VDC
Insulation Resistance:	10,000 MΩ min.
Dielectric Withstanding Voltage:	1,000 VRMS min.

NOTES:

1. Standard Tolerances:
   Assembly tolerance: +/-.010" (.25mm)
   Insulator length: +/-.005 (.13mm)
   Insulator width: +/-.005 (.13mm)
   Insulator height: +/-.005 (.13mm)
   Pin Length: +/-.005 (.13mm)
   Pin Diameter: +/-.002 (.051mm)
   Pin Angle: +/-2°
   Co-planarity of SMT connectors: .005" (.13mm) up to 1" (25.4mm) in connector length
   Insulator Flatness: .005" (.13mm) up to 1" (25.4mm) in connector length
2. Per IEC 60512-11-(4,-9,-10,-12)
3. Current rating is typically a measured function of the female socket/connector. The amount of current a solid, male, brass pin can tolerate is a direct relation of the heat displaced based on current and the ability of neighboring components to handle displaced heat.

(c)2025 Mill-Max Mfg Corp. | 516-922-6000
190 Pine Hollow Road, Oyster Bay, NY 11771

Downloaded from Arrow.com.

ADDITIONAL NOTES AND SPECIFICATIONS

In the interest of improved design, quality and performance , Mill-Max reserves the right to make changes in its specifications without prior notice. Specifications and tolerances are provided wherever possible. The tolerance on dimensions of critical to function features is typically held tighter than the stated standard tolerances, such as press-fits, holes and lengths affecting the coplanarity of SMT products. Due to the wide variety of interconnects Mill-Max offers, the specific tolerances vary from product to product. If you need information regarding the tolerance of a particular part, please contact Technical Services.

RELATED LINKS AND DOCUMENTS

- Environmental Compliance: https://www.mill-max.com/rohs

(c)2025 Mill-Max Mfg Corp. | 516-922-6000
190 Pine Hollow Road, Oyster Bay, NY 11771

Downloaded from Arrow.com.