275 Watt Industrial

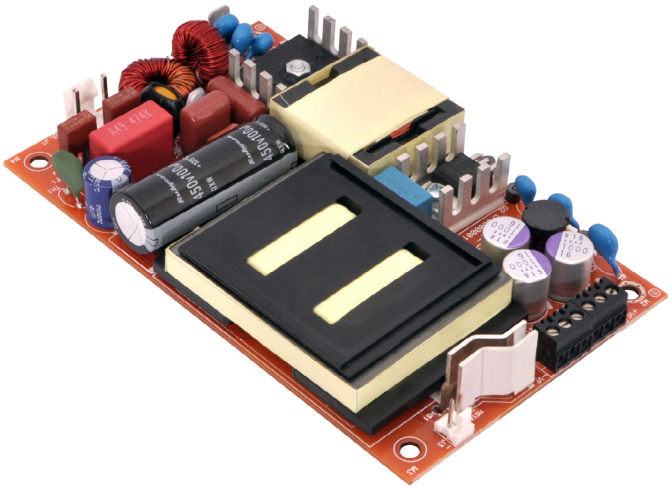

Features

- 5 x 3 x 0.75 Inches Form factor
- 275 Watts with Forced Air Cooling
- Efficiencies upto 92%
- Now IEC/EN/UL62368-1 Compliant New
- -40 to 70 degree operating temperature*
- 12V / 0.5A Fan Output, Thermal Shut-Down feature
- 3.37m Hours, Telcordia -SR332-issue 3 MTBF
- No Load Power < 0.5W
- Approved with metal enclosures/accessories

Electrical Specifications

Input Voltage	80-264 VAC/390 VDC, Universal (Derate from 100% at 100V AC to 72% for Forced Cooling and 69% for Convection Cooling at 80V AC)
Input Frequency	47–63 Hz
Input Current	115 VAC: 2.6 A max. 230 VAC: 1.3 A max.
No Load Power	<0.5W typical for ULP275-1XXX and <0.85W typical for ULP275-0XXX
Inrush Current	115 VAC – 25 A, 230 VAC – 45 A, 264 VAC – 75 A
Leakage Current	300 uA Typical, (N.A. For Class II Option) Touch current <100uA
Efficiency	92%(48V,58V), 90%(24V,30V), 88%(12V,15V)
Hold-up Time	at 275W:8 ms ; 160W: 16 ms
Power Factor	excess 0.95 with Full Load
Output Power	275W with 13 CFM, upto 160W Convection
Line Regulation	+/-0.5%
Load Regulation	+/-1%
Transient Response	25% step load change, at 0.1A/uS slew rate, 50% duty cycle, 50Hz=4% , recovery time < 5 ms
Rise Time	55ms typical
Set Point Tolerance	+/–1%
Output Voltage Adjustment	+/–3% (Ref. Note 9)
Over Current Protection	>110%
Over Voltage Protection	110 to 140%
Short Circuit Protection	Hiccup mode
Switching Frequency	PFC – 70 to 130 KHz ,PWM – 50-80 KHz
Operating Temperature[7]	- 40 to +70°C, * -40 to 0°C startup is guaranteed with spec deviation
Storage Temperature	–40 to +85°C
Relative Humidity	5% to 95%, noncondensing
Altitude	Operating: 16,000 ft.; Nonoperating: 40,000 ft.
MTBF	3.37m Hours, Telcordia -SR332-issue 3
Isolation Voltage	Input to Output – 4000 VDC for ITE application Input to GND - 2500 VDC (Not Applicable For Class II Option)
Cooling	275W with 13 CFM forced air cooling[6] (refer Mechanical Drawing) upto 160 W with natural convection cooling[6] (refer Derating Curve)

Downloaded from Arrow.com.

Please read our datasheet & drawing disclaimer here.

Model Number	Type of Connector	Voltage	Max. Load (Convection) (152W) @50°C	Max.Load (Convection) (160W) @40°C	Max. Load (13 CFM)	Min. Load	Ripple[1]	Signals
ULP275-1012	Header Molex @ I/P Screw Terminal @ O/P	12 V	12.50A	13.33A	22.92A	0.0 A	2%	N.A
ULP275-1312	Header Molex @ I/P Header Molex @ O/P	12 V	12.50A	13.33A	22.92A	0.0 A	2%	N.A
ULP275-1015	Header Molex @ I/P Screw Terminal @ O/P	15 V	10.00A	10.66A	18.33A	0.0 A	2%	N.A
ULP275-1315	Header Molex @ I/P Header Molex @ O/P	15 V	10.00A	10.66A	18.33A	0.0 A	2%	N.A
ULP275-1024	Header Molex @ I/P Screw Terminal @ O/P	24 V	6.25A	6.67A	11.46A	0.0 A	1%	N.A
ULP275-1324	Header Molex @ I/P Header Molex @ O/P	24 V	6.25A	6.67A	11.46A	0.0 A	1%	N.A
ULP275-1030	Header Molex @ I/P Screw Terminal @ O/P	30 V	5.00A	5.33A	9.17A	0.0 A	1%	N.A
ULP275-1330	Header Molex @ I/P Header Molex @ O/P	30 V	5.00A	5.33A	9.17A	0.0 A	1%	N.A
ULP275-1048	Header Molex @ I/P Screw Terminal @ O/P	48 V	3.12A	3.33A	5.73A	0.0 A	1%	N.A
ULP275-1348	Header Molex @ I/P Header Molex @ O/P	48 V	3.12A	3.33A	5.73A	0.0 A	1%	N.A
ULP275-1058	Header Molex @ I/P Screw Terminal @ O/P	58 V	2.58A	2.76A	4.74A	0.0 A	1%	N.A
ULP275-1358	Header Molex @ I/P Header Molex @ O/P	58 V	2.58A	2.76A	4.74A	0.0 A	1%	N.A

ULP275-CK metal cover kit accessory

Add suffix "S1" to get model number with Input connector – Screw terminal and Output Connector – Screw Terminal. e.g. ULP275 -1012-S1(Without PGPF)

Add suffix "S2" to get model number with Input connector – Right Angle Type and Output Connector – Right Angle Type. e.g. ULP275 -1012-S2 (Without PGPF)

For Power supply unit with Base plate (metal accessory option) add "-B" suffix at the end of model number
For Power supply unit with L bracket (metal accessory option) add "-L" suffix at the end of model number
For Power supply unit with U channel (metal accessory option) add "-U" suffix at the end of model number
For Power supply unit with CK Cover kit (metal accessory option) add "-CK" suffix at the end of model number

Innovations in Power

Downloaded from Arrow.com.

Model Number	Type of Connector	Voltage	Max. Load (Convection) (152W) @50°C	Max.Load (Convection) (160W) @40°C	Max. Load (13 CFM)	Min. Load	Ripple[1]	Signals
ULP275-0012	Header Molex @ I/P Screw Terminal @ O/P	12 V	12.50A	13.33A	22.92A	0.0 A	2%	PG & AC PF[11]
ULP275-0312	Header Molex @ I/P Header Molex @ O/P	12 V	12.50A	13.33A	22.92A	0.0 A	2%	PG & AC PF[11]
ULP275-0015	Header Molex @ I/P Screw Terminal @ O/P	15 V	10.00A	10.66A	18.33A	0.0 A	2%	PG & AC PF[11]
ULP275-0315	Header Molex @ I/P Header Molex @ O/P	15 V	10.00A	10.66A	18.33A	0.0 A	2%	PG & AC PF[11]
ULP275-0024	Header Molex @ I/P Screw Terminal @ O/P	24 V	6.25A	6.67A	11.46A	0.0 A	1%	PG & AC PF[11]
ULP275-0324	Header Molex @ I/P Header Molex @ O/P	24 V	6.25A	6.67A	11.46A	0.0 A	1%	PG & AC PF[11]
ULP275-0030	Header Molex @ I/P Screw Terminal @ O/P	30 V	5.00A	5.33A	9.17A	0.0 A	1%	PG & AC PF[11]
ULP275-0330	Header Molex @ I/P Header Molex @ O/P	30 V	5.00A	5.33A	9.17A	0.0 A	1%	PG & AC PF[11]
ULP275-0048	Header Molex @ I/P Screw Terminal @ O/P	48 V	3.12A	3.33A	5.73A	0.0 A	1%	PG & AC PF[11]
ULP275-0348	Header Molex @ I/P Header Molex @ O/P	48 V	3.12A	3.33A	5.73A	0.0 A	1%	PG & AC PF[11]
ULP275-0058	Header Molex @ I/P Screw Terminal @ O/P	58 V	2.58A	2.76A	4.74A	0.0 A	1%	PG & AC PF[11]
ULP275-0358	Header Molex @ I/P Header Molex @ O/P	58 V	2.58A	2.76A	4.74A	0.0 A	1%	PG & AC PF[11]

ULP275-CKP metal cover kit accessory

Add suffix "S1" to get model number with Input connector – Screw terminal and Output Connector – Screw Terminal. e.g. ULP275-0012-S1(With PGPF)

Add suffix "S2" to get model number with Input connector – Right Angle Type and Output Connector – Right Angle Type. e.g. ULP275-0012-S2(With PGPF)

Connectors		
J1	Pin 1	AC LINE
	Pin 2	NOT FITTED
	Pin 3	AC NEUTRAL
J2 Option 1 & 2	Pin 1,2,3	V1 +VE
	Pin 4,5,6	V1 -VE
J3	Pin 1	FAN +VE
	Pin 2	FAN -VE
J4	Pin 1	Vs
(For PGPF Option Only)	Pin 2	PGPF
	Pin 3	GND

Downloaded from Arrow.com.

Notes

1. Ripple is peak to peak with 20 MHz bandwidth and 10 µF (Electrolytic capacitor) in parallel with a 0.1 µF capacitor at rated line voltage and load ranges.
2. For Class II version Enquire with EOS Sales Rep before Order.
3. Combined output power of main output, fan supply shall not exceed max. Power rating.
4. Fan supply output voltage tolerance including set point accuracy, line and load regulation is +/-10% and Ripple and noise is less than 10%.
5. Specifications are for nominal input voltage, 25°C unless otherwise stated.
6. 275W with 13CFM forced air cooling and 160W with natural convection cooling at 100 to 264VAC.
7. Output ripple can be more than 10% of the output voltage.
8. Fusing on neutral for ITE model is optional.
9. Adjustment potentiometer is located on the SMT side of the PCB.
10. When used in Cover Kit, de-rate output power to 70 % under all operating conditions
11. A TTL signal is available at pin 2 of J4 which goes high 100-500mS after output voltage reaches 90% of set value.
    It goes low a minimum of 1mS before output falls below 90% of the set value, when input AC is switched off.
12. Add suffix "S1" to get model number with Input connector – Screw terminal and Output Connector – Screw Terminal. e.g. ULP275-1012-S1 (Without PGPF)
13. Add suffix "S2" to get model number with Input connector – Right Angle Type and Output Connector – Right Angle Type. e.g. ULP275-1012-S2 (Without PGPF)
14. Add suffix "S1" to get model number with Input connector – Screw terminal and Output Connector – Screw Terminal. e.g. ULP275-0012-S1 (With PGPF)
15. Add suffix "S2" to get model number with Input connector – Right Angle Type and Output Connector – Right Angle Type. e.g. ULP275-0012-S2 (With PGPF)

Power good / AC fail signal specs

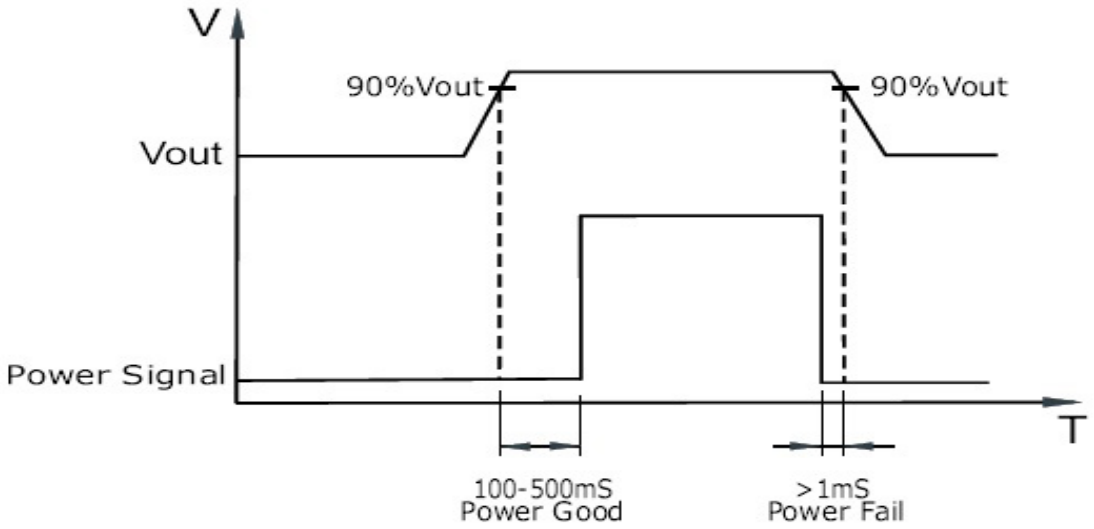

Downloaded from Arrow.com.

Mechanical Specifications

AC Input Connector (J1) Option 1 (Molex Connector @ I/P)	Molex: 26–60–4030 Mating: 09–50–3031; Pins: 08–50–0106
AC Input Connector (J1) Option 2 (Screw Terminal @ I/P)	Molex: 39357 Series or equivalent
DC Output Connector (J2) Option 1 (Molex Connector @ O/P)	Molex: 26-60-4060 Mating: 09-50-3061; Pins: 08-50-0106
DC Output Connector (J2) Option 2 (Screw Terminal @ O/P)	Molex: 39357 Series or equivalent
AC Input Connector (J1) Option 3 (Right Angle Type @ I/P)	TE Connectivity: 647676-3 Mating: 1-1123722-3 ; Crimp: 1123721-2
DC Output Connector (J2) Option 3 (Molex Connector @ O/P)	TE Connectivity: 647676-6 Mating: 1-1123722-6 ; Crimp: 1123721-2
Aux (Fan) Output(J3)	AMP :640456-2 Mating: 640440-2
Signal Output (J4)	AMP :640456-3 Mating: 640440-3
Dimensions	5 x 3 x 0.75 inches (127 x 76.2x 19.05 mm)
Weight	250 gm approx

EMC

Parameter	Conditions/Description	Criteria
Conducted Emissions	EN55032-B, CISPR22-B, FCC PART15-B	Pass
Radiated Emissions	EN 55032 A	Pass Level B with external core (King core K5B RC 25x12x15-M in input cable)
Input Current Harmonics	EN 61000-3-2	Class D
Voltage Fluctuation and Flicker	EN 61000-3-3	Pass
ESD Immunity	EN 61000-4-2	Level 3, Criterion A
Radiated Field Immunity	EN 61000-4-3	Level 3, Criterion A
Electrical Fast Transient Immunity	EN 61000-4-4	Level 3, Criterion A
Surge Immunity	EN 61000-4-5	Level 3, Criterion A
Conducted Immunity	EN 61000-4-6	Level 3, Criterion A
Magnetic Field Immunity	EN 61000-4-8	Level 3, Criterion A
Voltage dips, interruptions	EN 61000-4-11	Criterion A & B

Safety

CE Mark	Complies with LVD Directive
Approval Agency	Nemko, UL, C-UL
Safety Standard(s)	EN/IEC/UL 62368-1(Ed .3)
Safety File Number(s)	UL : Certificate No : E516414, Nemko : Certificate No : P20224771, CB Test Certificate No : NO113595

Innovations in Power

Downloaded from Arrow.com.

Derating Curve

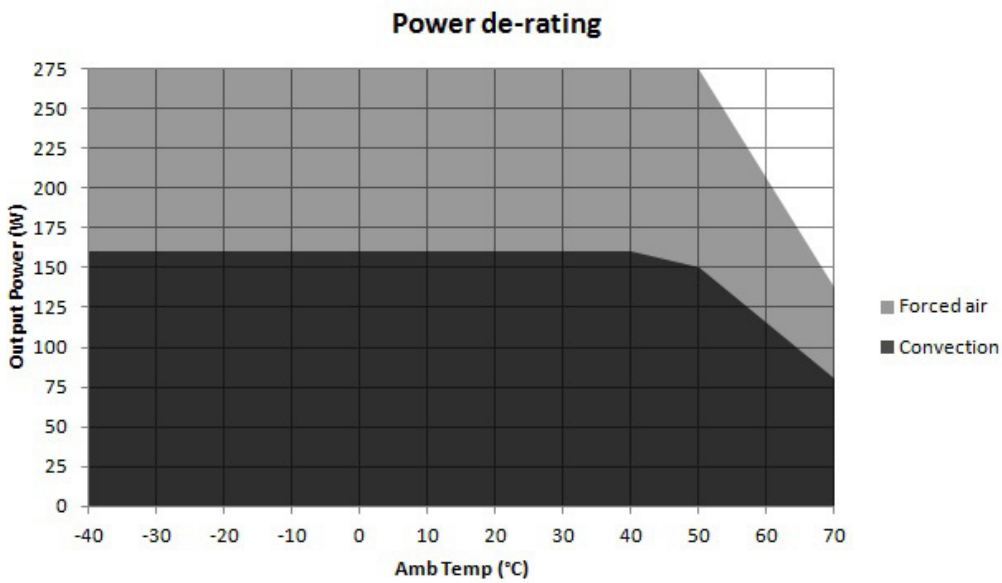

Convection load: 160W up to 40 °C
De-rate between 40-50 °C @ 0.625% per °C
De-rate above 50 °C @ 2.33% per °C

Forced air cooled load : 275W up to 50°C
De-rate above 50 °C @ 2.5% per °C

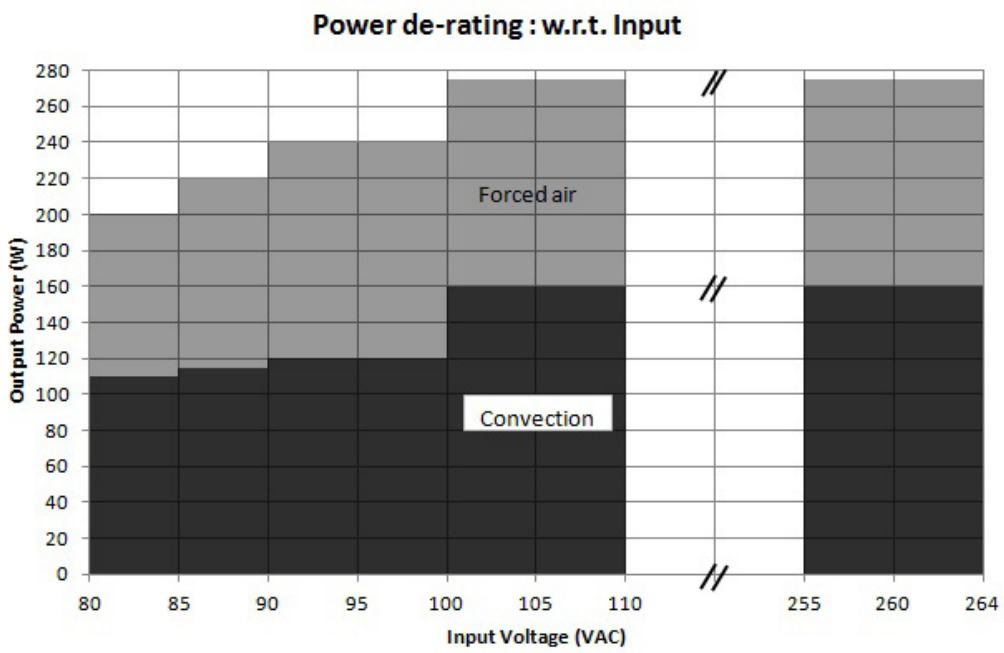

Downloaded from Arrow.com.

Mechanical Drawing

Input connector – Header Molex and Output Connector – Screw Terminal (Without PGPF)

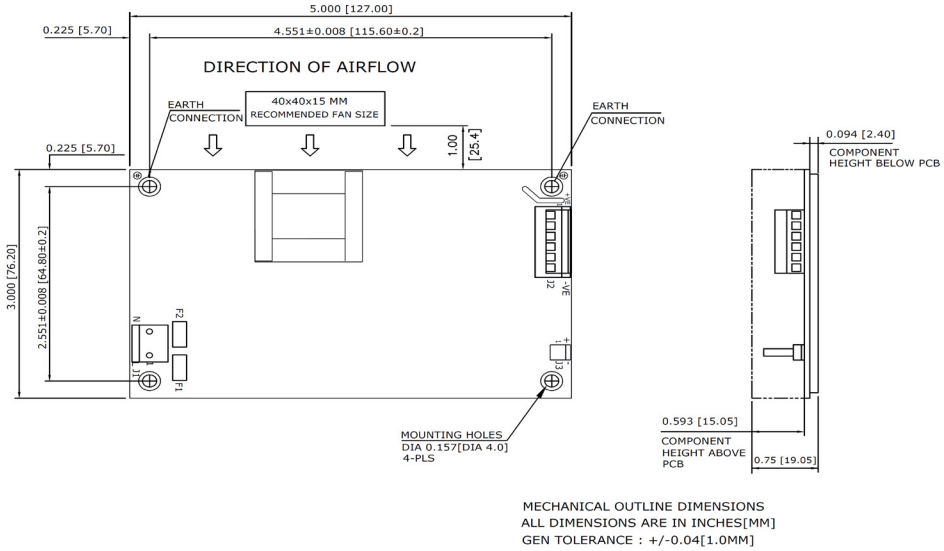

Notes: In case the PCB is mounted in a metal enclosure, using metal hardware ensure the following

1. Stand off, used to mount PCB has OD of 5.4 mm max.
2. Screws, used to fix PCB on stand off, have head dia of 6.0 mm max.
3. Washer, if used, to have dia of 6.5 mm max.

Mechanical Drawing

Input connector – Header Molex and Output Connector – Screw Terminal. (With PGPF)

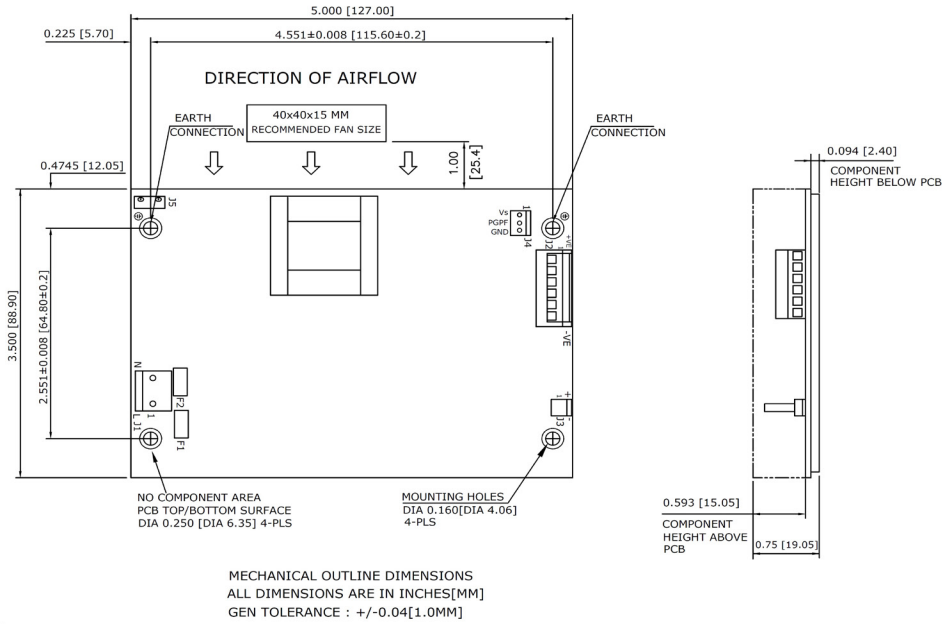

Notes: In case the PCB is mounted in a metal enclosure, using metal hardware ensure the following

1. Stand off, used to mount PCB has OD of 5.4 mm max.
2. Screws, used to fix PCB on stand off, have head dia of 6.0 mm max.
3. Washer, if used, to have dia of 6.5 mm max.

Downloaded from Arrow.com.

Mechanical Drawing

Input connector – Header Molex and Output Connector – Header Molex. (Without PGPF)

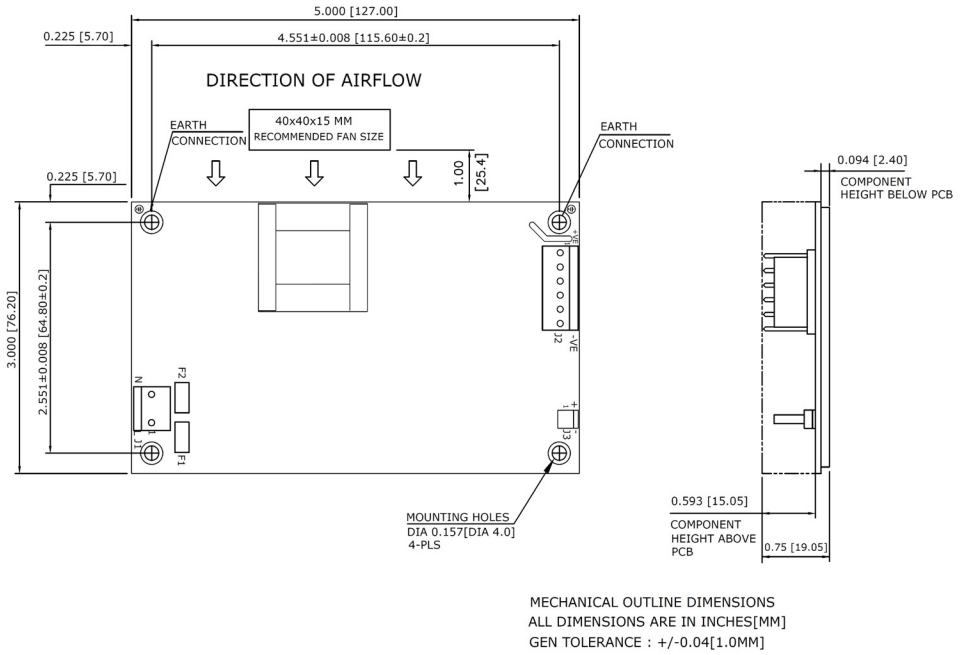

Notes: In case the PCB is mounted in a metal enclosure, using metal hardware ensure the following

1. Stand off, used to mount PCB has OD of 5.4 mm max.
2. Screws, used to fix PCB on stand off, have head dia of 6.0 mm max.
3. Washer, if used, to have dia of 6.5 mm max.

Mechanical Drawing

Input connector – Header Molex and Output Connector – Header Molex. (With PGPF)

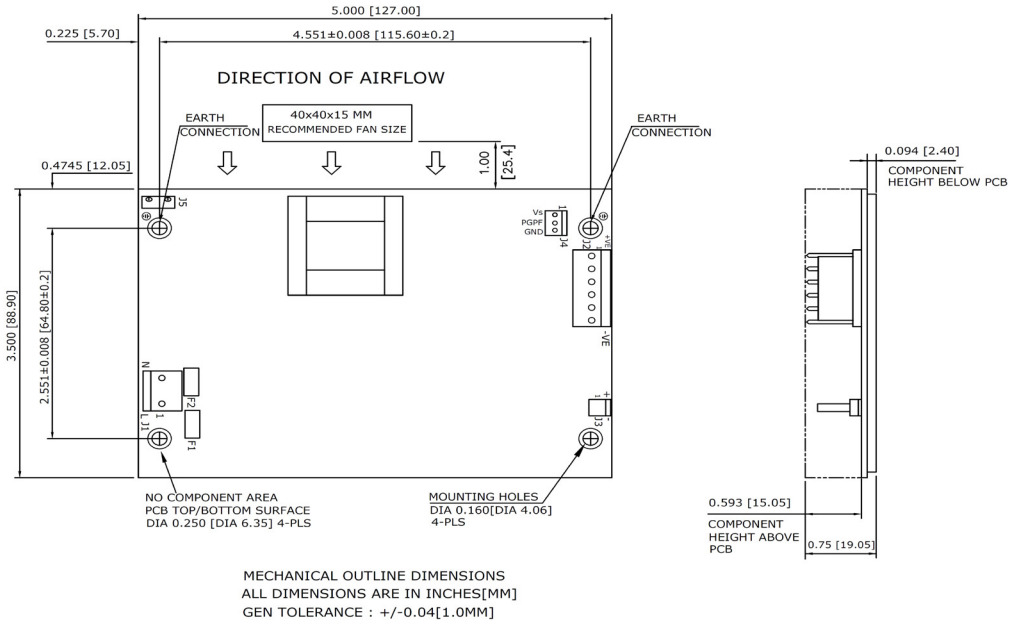

Notes: In case the PCB is mounted in a metal enclosure, using metal hardware ensure the following

1. Stand off, used to mount PCB has OD of 5.4 mm max.
2. Screws, used to fix PCB on stand off, have head dia of 6.0 mm max.
3. Washer, if used, to have dia of 6.5 mm max.

Downloaded from Arrow.com.

Mechanical Drawing

Input connector – Screw terminal and Output Connector – Screw Terminal. (Without PGPF)

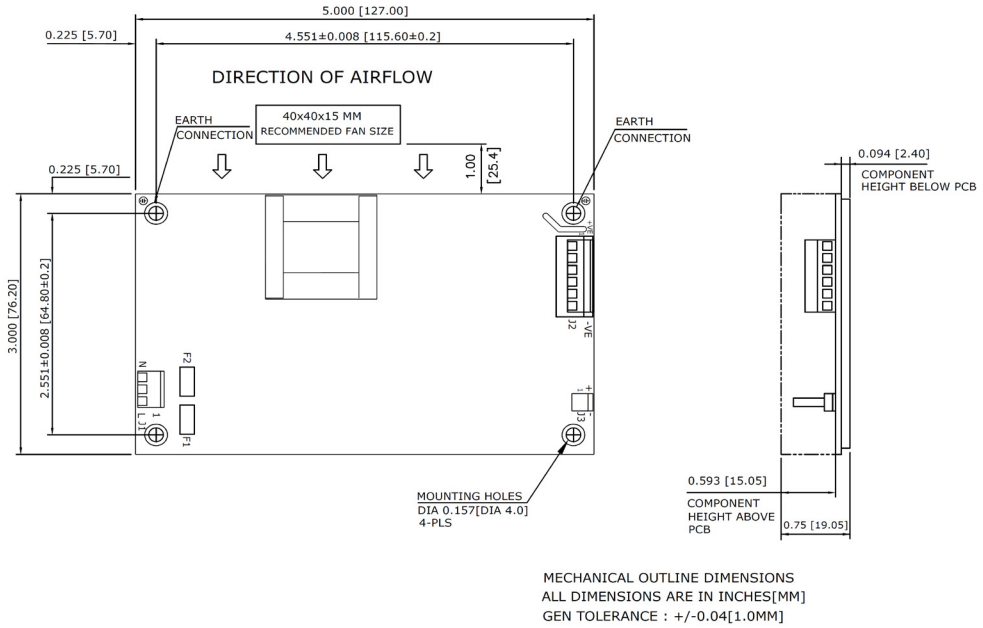

Notes: In case the PCB is mounted in a metal enclosure, using metal hardware ensure the following

1. Stand off, used to mount PCB has OD of 5.4 mm max.
2. Screws, used to fix PCB on stand off, have head dia of 6.0 mm max.
3. Washer, if used, to have dia of 6.5 mm max.

Mechanical Drawing

Input connector – Screw terminal and Output Connector – Screw Terminal. (With PGPF)

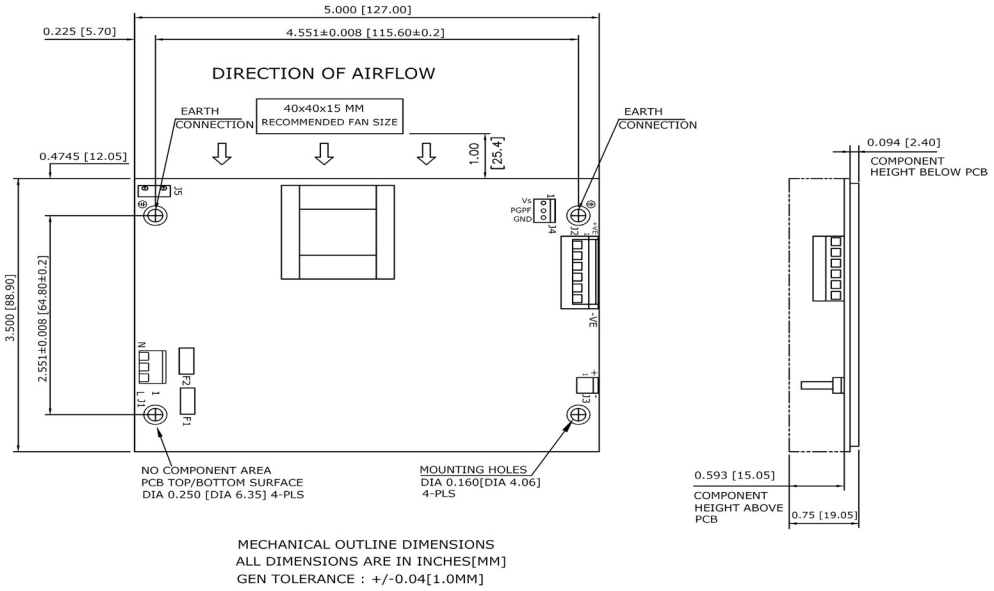

Notes: In case the PCB is mounted in a metal enclosure, using metal hardware ensure the following

1. Stand off, used to mount PCB has OD of 5.4 mm max.
2. Screws, used to fix PCB on stand off, have head dia of 6.0 mm max.
3. Washer, if used, to have dia of 6.5 mm max.

Downloaded from Arrow.com.

Mechanical Drawing

Input connector – Right Angle Type and Output Connector – Right Angle (Without PGPF)

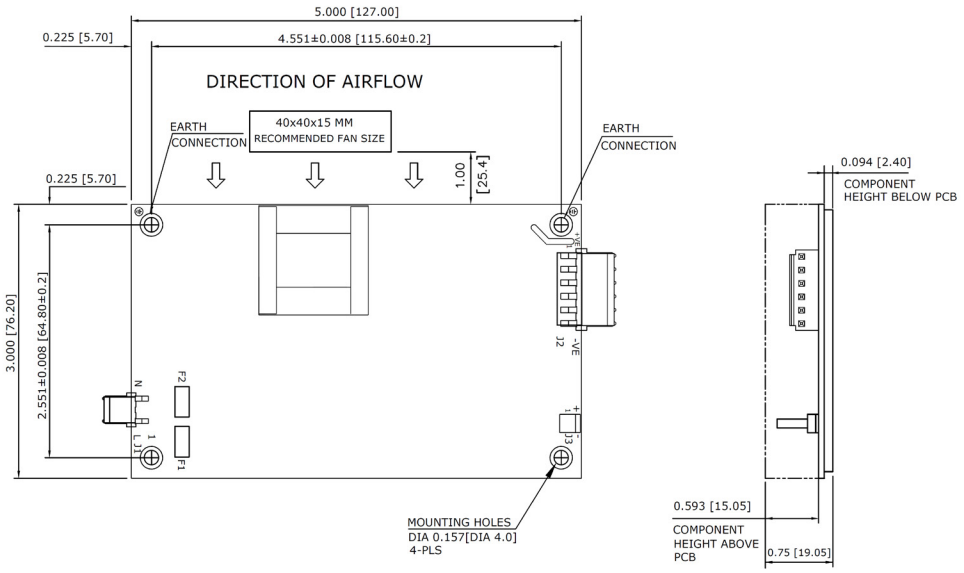

MPN FOR INPUT CONNECTOR: 647676-3
MPN FOR OUTPUT CONNECTOR: 647676-6

MECHANICAL OUTLINE DIMENSIONS
ALL DIMENSIONS ARE IN INCHES[MM]
GEN TOLERANCE : +/-0.04[1.0MM]

Notes: In case the PCB is mounted in a metal enclosure, using metal hardware ensure the following
1. Stand off, used to mount PCB has OD of 5.4 mm max.
2. Screws, used to fix PCB on stand off, have head dia of 6.0 mm max.
3. Washer, if used, to have dia of 6.5 mm max.

Mechanical Drawing

Input connector – Right Angle Type and Output Connector – Right Angle (With PGPF)

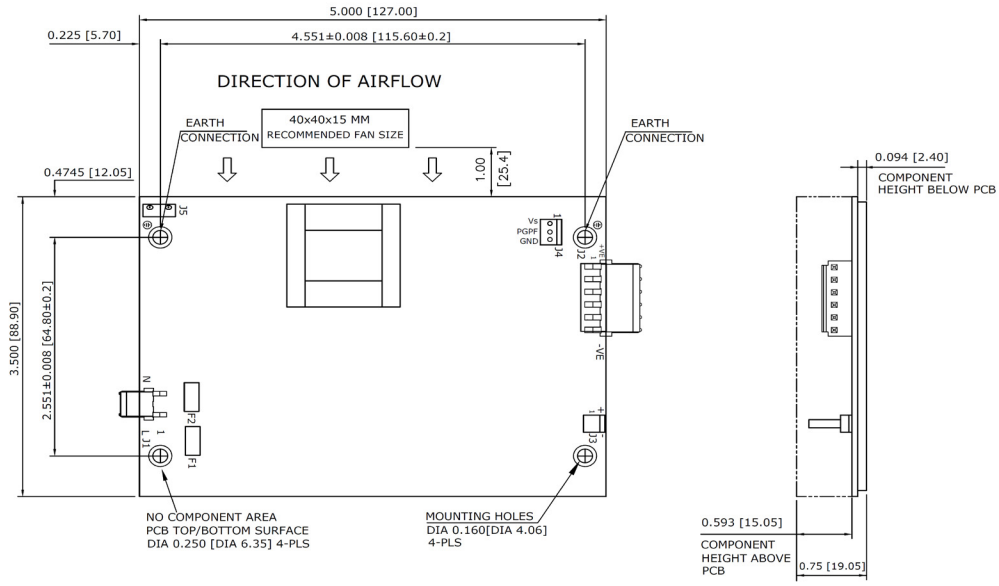

MECHANICAL OUTLINE DIMENSIONS
ALL DIMENSIONS ARE IN INCHES[MM]
GEN TOLERANCE : +/-0.04[1.0MM]

MPN FOR INPUT CONNECTOR: 647676-3
MPN FOR OUTPUT CONNECTOR: 647676-6

Notes: In case the PCB is mounted in a metal enclosure, using metal hardware ensure the following
1. Stand off, used to mount PCB has OD of 5.4 mm max.
2. Screws, used to fix PCB on stand off, have head dia of 6.0 mm max.
3. Washer, if used, to have dia of 6.5 mm max.

Downloaded from Arrow.com.

Mechanical Drawing

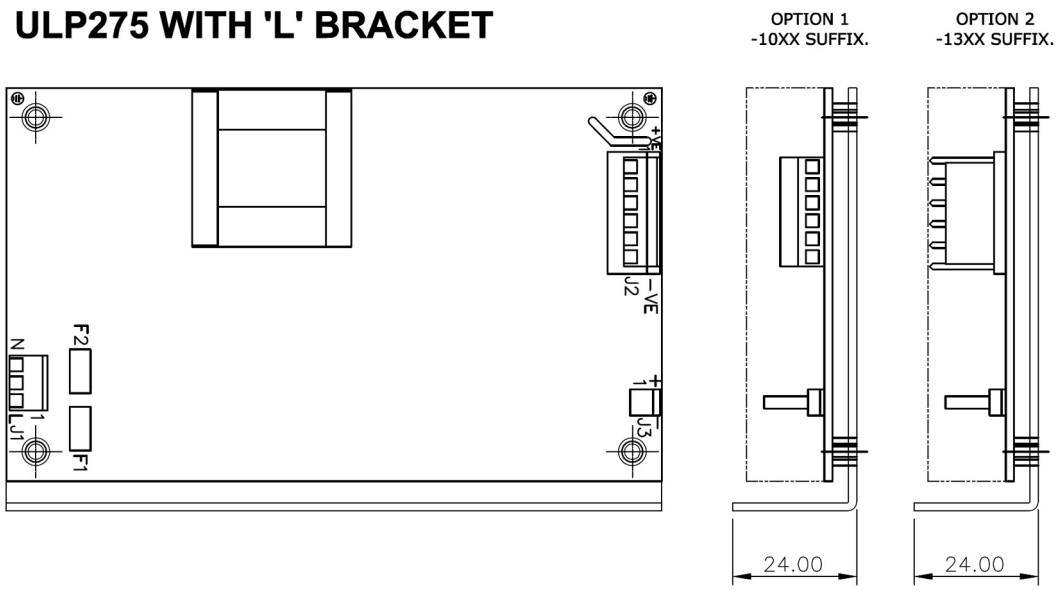

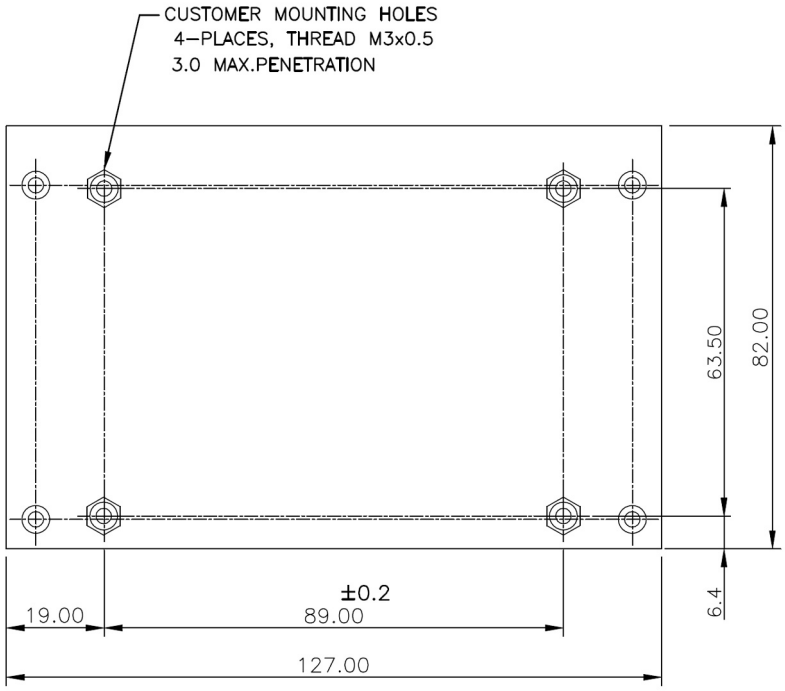

MECHANICAL OUTLINE DIMENSIONS
ALL DIMENSIONS ARE IN MM
GEN.TOLERANCE:+/-0.5 MM

Downloaded from Arrow.com.

Mechanical Drawing

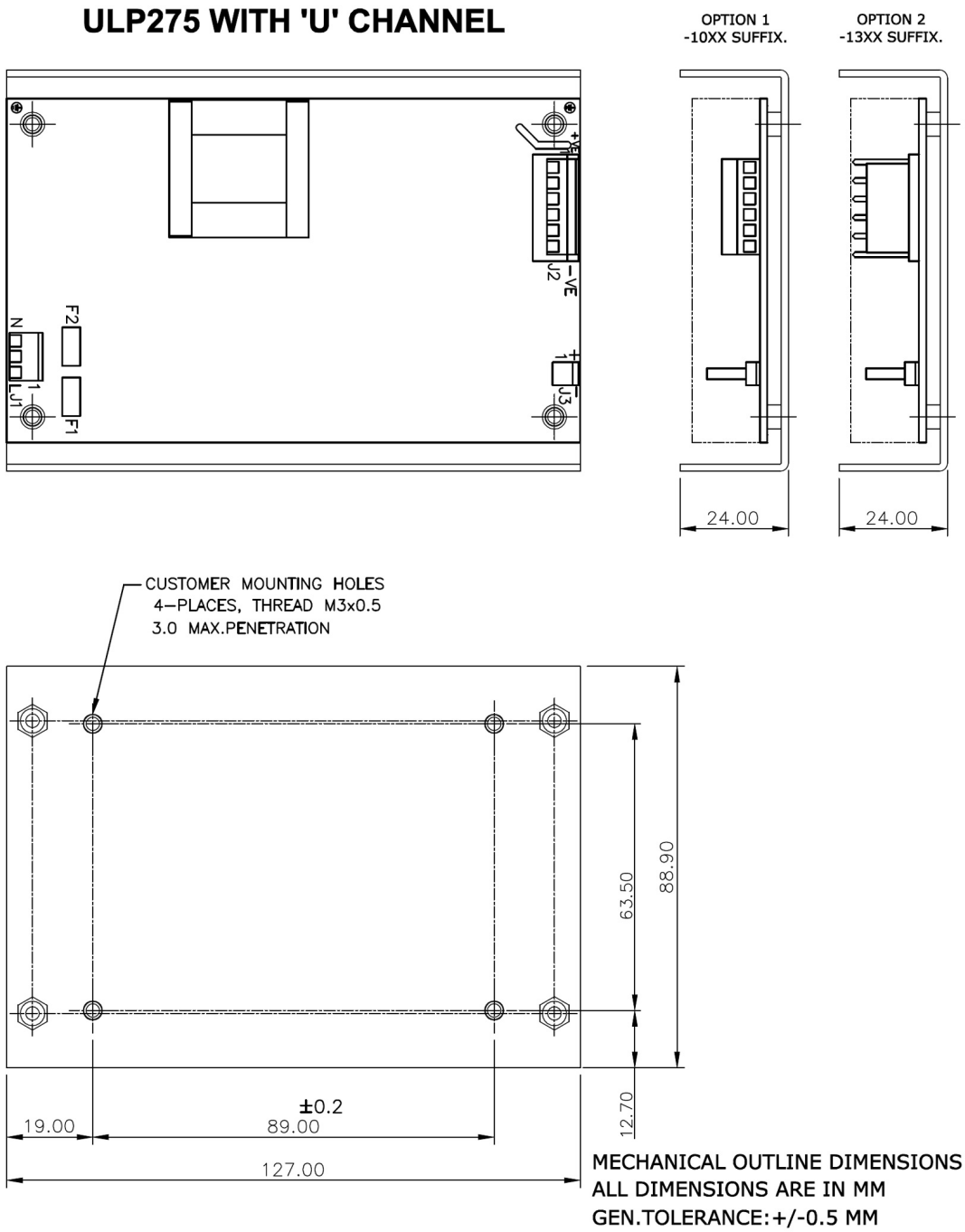

Downloaded from Arrow.com.

ULP275 WITH BASE PLATE

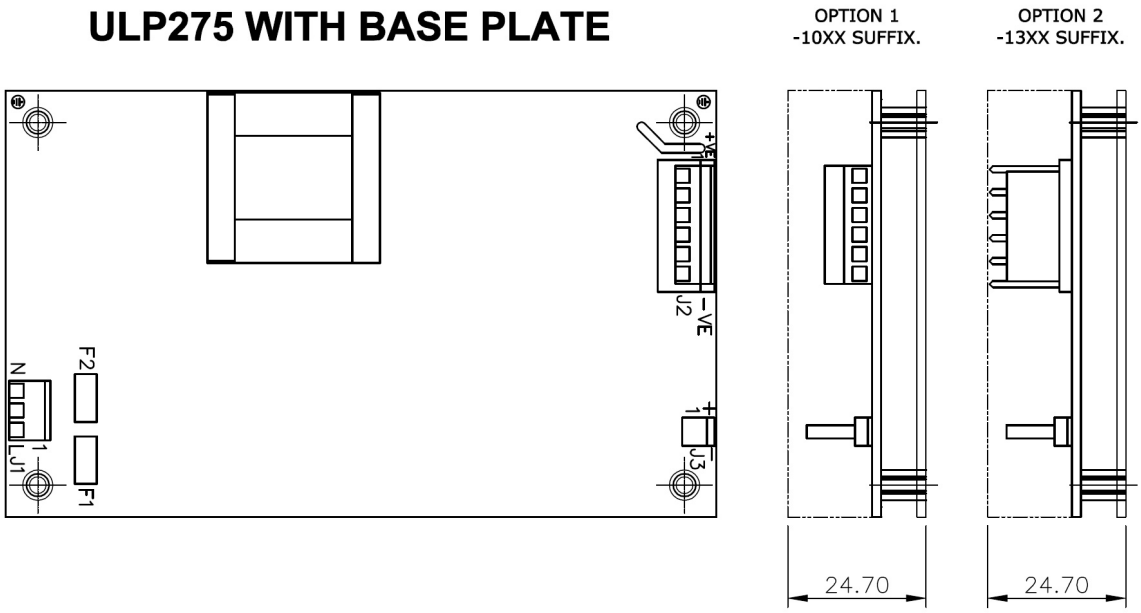

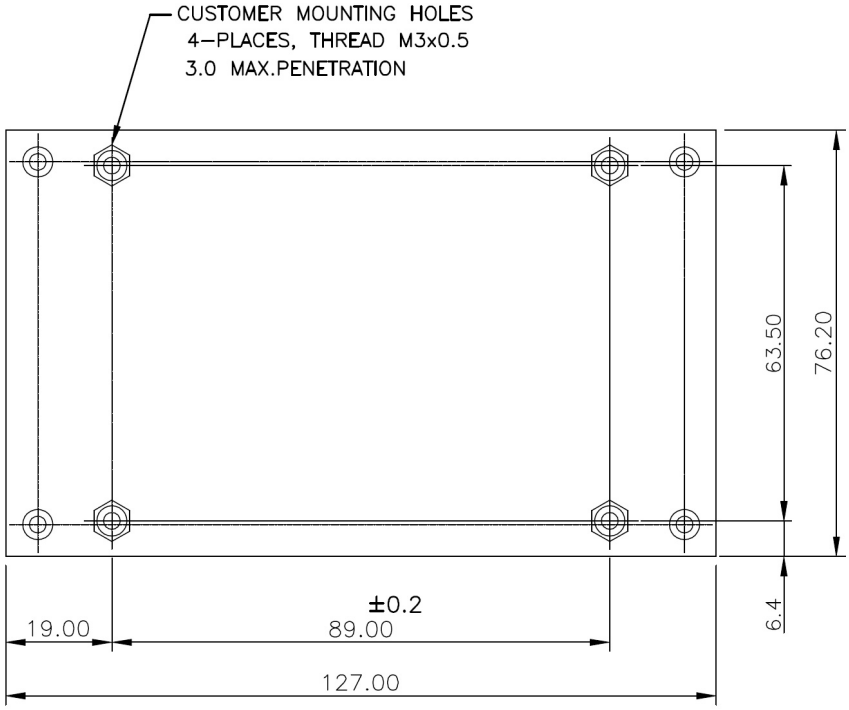

MECHANICAL OUTLINE DIMENSIONS
ALL DIMENSIONS ARE IN MM
GEN.TOLERANCE:+/-0.5 MM

Downloaded from Arrow.com.

ULP275 WITH COVER KIT

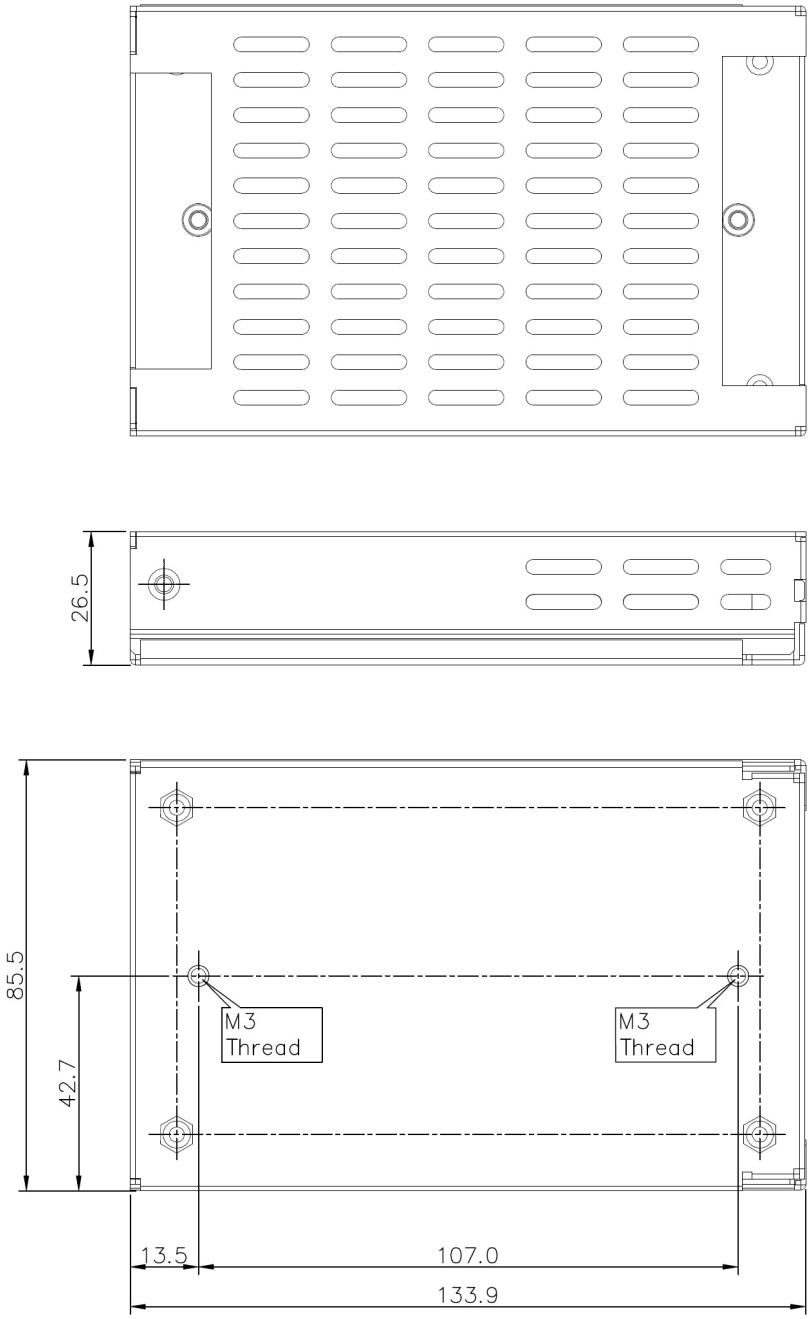

MECHANICAL OUTLINE DIMENSIONS
ALL DIMENSIONS ARE IN MM.
GEN. TOLERANCE: ±1.0 mm

Downloaded from Arrow.com.