Alle Rechte vorbehalten/ *All rights reserved*

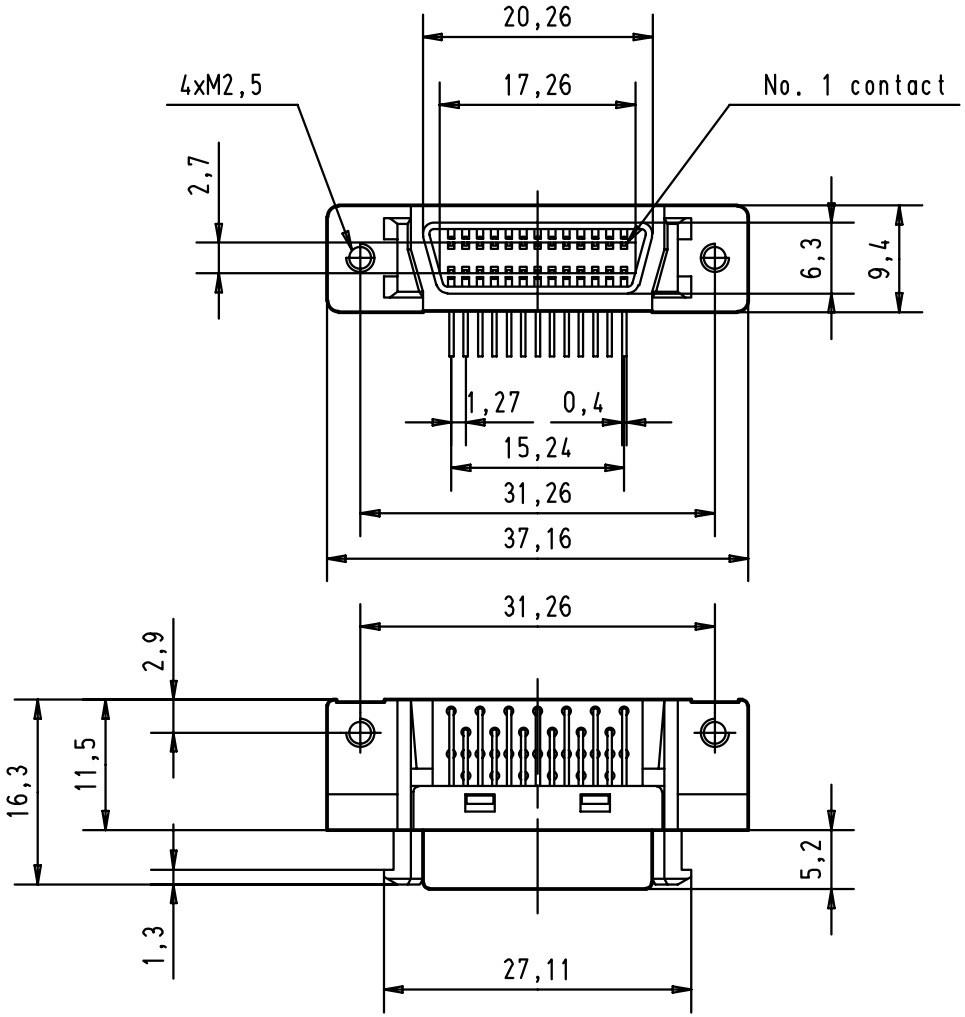

Printed Board Layout
component side

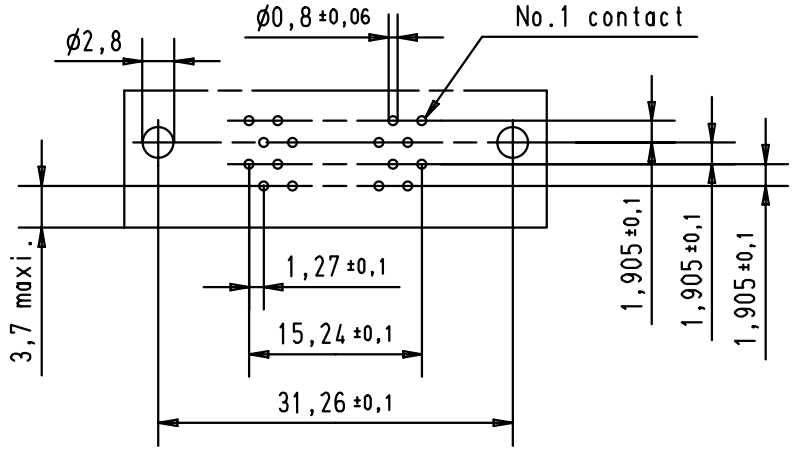

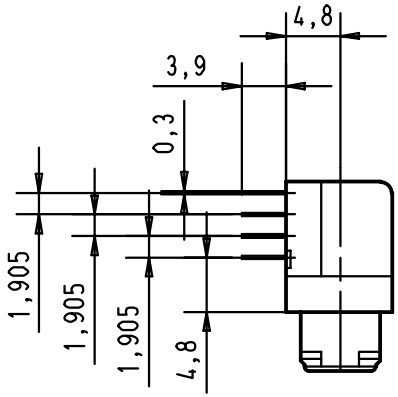

				Dat.	Name
			Detail.	30-AUG-00	Alspace
			Insp.		
			Stand.		
27941	30-AUG-00	Alspace			
Mod.	Dat.	Name			

All Dim. in mm
Orig. Size DIN A 4

HARTING EURL
F-95972 Paris

har.mik® I/O bellow
26 poles female connector
with angled soder pins
and fixed latching

TB 60 11 026 5132

Sub.

Maßstab/ *Scale* 1,5:1

Blatt/ *Page* 1/1

Downloaded from Arrow.com.