Data Sheet | Item Number: 262-341

4-conductor terminal block; without push-buttons; with snap-in mounting foot; 1-pole; for plate thickness 0.6 - 1.2 mm; Fixing hole 3.5 mm Ø; 4 mm²; CAGE CLAMP®; 4,00 mm²; gray

https://www.wago.com/262-341

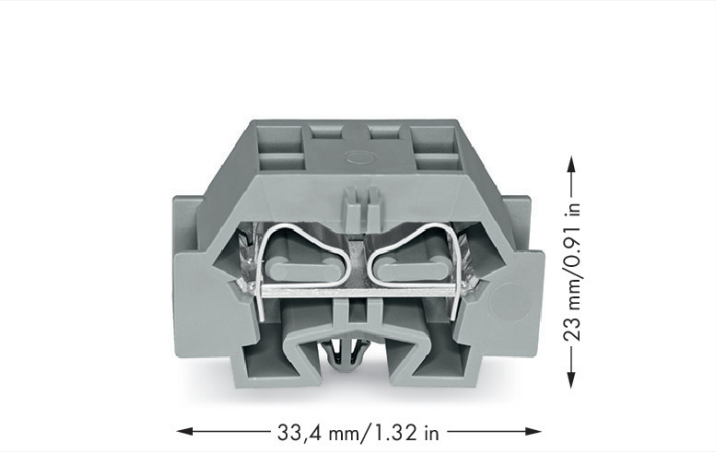

Color: gray

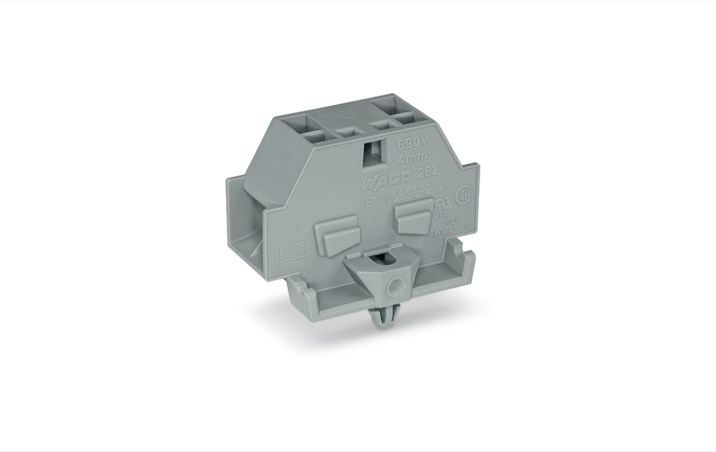

Through terminal block, 262 Series, operating tool

Our through terminal block (item number 262-341) makes connecting wires quick and easy. Ensure that the strip lengths are between 9 and 10 mm when connecting conductors to this through terminal block. Whether for industrial or building applications, you can use our through terminal blocks to connect electrical conductors quickly and safely. We offer variants for both classic through-wiring and potential distribution. This product features conductor terminals and utilizes CAGE CLAMP®. Our CAGE CLAMP® connection provides a reliable and maintenance-free way to connect all types of conductors. You do not need to prepare the conductor in any way, such as crimping ferrules. The item's dimensions are (12 x 33.4 x 27.5) mm (width x height x depth). Depending on the conductor type, this through terminal block is suitable for conductor cross sections ranging from 0.08 mm² to 4 mm².

This mini rail-mount terminal block is operated with an operating tool.

Downloaded from Arrow.com.

Electrical data

Ratings per IEC/EN

Nominal voltage (III/3)	690 V
Rated impulse withstand voltage (III / 3)	8 kV
Rated current	32 A
Legend (ratings)	(III / 3) ≙ Overvoltage category III / Pollution degree 3

Approvals per UL 1059

Use group	B	C	D
Rated voltage	300 V	300 V	300 V
Rated current	20 A	20 A	10 A

Approvals per CSA 22.2 No 158

Use group	B	C	D
Rated voltage	600 V	300 V	600 V
Rated current	5 A	25 A	5 A

General information

Wiring direction	Side-entry wiring

Connection Data

Clamping units	4
Total number of potentials	1
Number of levels	1

Connection 1

Connection technology	CAGE CLAMP®
Actuation type	Operating tool
Connectable conductor materials	Copper
Solid conductor	0.08 … 4 mm² / 28 … 12 AWG
Fine-stranded conductor	0.08 … 4 mm² / 28 … 12 AWG
Strip length	9 … 10 mm / 0.35 … 0.39 inches
Wiring direction	Side-entry wiring

Physical data

Width	12 mm / 0.472 inches
Height	33.4 mm / 1.315 inches
Height from the surface	23.1 mm / 0.909 inches
Depth	27.5 mm / 1.083 inches

Mechanical data

Design	horizontal type
Mounting type	Snap-in foot
Marking level	Side marking

Material data

Note (material data)	Information on material specifications can be found here
Color	gray
Material group	I
Insulation material (main housing)	Polyamide (PA66)
Flammability class per UL94	V0
Fire load	0.102 MJ
Halogen-free	Yes
Weight	6.9 g

Downloaded from Arrow.com.

Environmental requirements

Processing temperature	-35 … +85 °C
Continuous operating temperature	-60 … +105 °C

Commercial data

Product Group	9 (Std Chassis Mt Blocks)
PU (SPU)	100 (50) pcs
Packaging type	Box
Country of origin	CN
GTIN	4044918638890
Customs tariff number	85369010000

Product Classification

UNSPSC	39121409
eCl@ss 10.0	27-14-11-06
eCl@ss 9.0	27-14-11-06
ETIM 9.0	EC001284
ETIM 10.0	EC001284
ECCN	NO US CLASSIFICATION

Environmental Product Compliance

RoHS Compliance Status	Compliant,No Exemption

Approvals / Certificates

General approvals

Approval	Standard	Certificate Name
CCA DEKRA Certification B.V.	EN 60998	NTR NL 7661
CSA DEKRA Certification B.V.	C22.2	70010891
KEMA/KEUR DEKRA Certification B.V.	EN 60998	71-102644
UR Underwriters Laboratories Inc.	UL 1059	E45172

Declarations of conformity and manufacturer's declarations

Approval	Standard	Certificate Name
EU-Declaration of Conformity WAGO GmbH & Co. KG	-	-
UK-Declaration of Conformity WAGO GmbH & Co. KG	-	-

Approvals for marine applications

Approval	Standard	Certificate Name
ABS American Bureau of Shipping	-	24-0095979-PDA
BV Bureau Veritas S.A.	EN 60947	07436/G0 BV
DNV GL Det Norske Veritas, Germanischer Lloyd	-	TAE00001V2
LR Lloyds Register	IEC 60998	LR22173030TA

Approvals for marine applications

PRS Polski Rejestr Statków	-	TE/1094/880590/23

Downloaded from Arrow.com.

Downloads

Environmental Product Compliance

Compliance Search

Environmental Product Compliance 262-341

Documentation

Bid Text

262-341	19.02.2019	xml 3.25 KB	
262-341	17.08.2017	doc 25.00 KB	

CAD/CAE-Data

CAD data

2D/3D Models 262-341

CAE data

EPLAN Data Portal 262-341

WSCAD Universe 262-341

ZUKEN Portal 262-341

1 Compatible Products

1.1 Required Accessories

1.1.1 End plate

1.1.1.1 End plate

Item No.: 262-371
End plate; with snap-in mounting foot; gray

1.2 Optional Accessories

1.2.1 DIN-rail

1.2.1.1 Mounting accessories

Item No.: 210-154
Aluminum carrier rail; 1000 mm long; 18 mm wide; 7 mm high; silver-colored

Downloaded from Arrow.com.

1.2.2 Ferrule

1.2.2.1 Ferrule

Item No.: 216-131
Ferrule; Sleeve for 0.25 mm² / AWG 24; uninsulated; electro-tin plated; silver-colored

Item No.: 216-241
Ferrule; Sleeve for 0.5 mm² / 20 AWG; insulated; electro-tin plated; electrolytic copper; gastight crimped; acc. to DIN 46228, Part 4/09.90; white

Item No.: 216-141
Ferrule; Sleeve for 0.5 mm² / 20 AWG; uninsulated; electro-tin plated; electrolytic copper; gastight crimped; acc. to DIN 46228, Part 1/08.92

Item No.: 216-242
Ferrule; Sleeve for 0.75 mm² / 18 AWG; insulated; electro-tin plated; electrolytic copper; gastight crimped; acc. to DIN 46228, Part 4/09.90; gray

Item No.: 216-142
Ferrule; Sleeve for 0.75 mm² / 18 AWG; uninsulated; electro-tin plated; electrolytic copper; gastight crimped; acc. to DIN 46228, Part 1/08.92

Item No.: 216-243
Ferrule; Sleeve for 1 mm² / AWG 18; insulated; electro-tin plated; electrolytic copper; gastight crimped; acc. to DIN 46228, Part 4/09.90; red

Item No.: 216-143
Ferrule; Sleeve for 1 mm² / AWG 18; uninsulated; electro-tin plated; electrolytic copper; gastight crimped; acc. to DIN 46228, Part 1/08.92

Item No.: 216-244
Ferrule; Sleeve for 1.5 mm² / AWG 16; insulated; electro-tin plated; electrolytic copper; gastight crimped; acc. to DIN 46228, Part 4/09.90; black

Item No.: 216-144
Ferrule; Sleeve for 1.5 mm² / AWG 16; uninsulated; electro-tin plated; electrolytic copper; gastight crimped; acc. to DIN 46228, Part 1/08.92; silver-colored

Item No.: 216-246
Ferrule; Sleeve for 2.5 mm² / AWG 14; insulated; electro-tin plated; electrolytic copper; gastight crimped; acc. to DIN 46228, Part 4/09.90; blue

1.2.3 Installation

1.2.3.1 Mounting accessories

Item No.: 209-137
Mounting adapter; can be used as end stop; 6.5 mm wide; gray

Item No.: 209-120
Mounting foot; can be snapped on terminal blocks with snap-in mounting foot; for mounting on relay-modules; 6.4 mm wide; gray

1.2.4 Jumper

1.2.4.1 Jumper

Item No.: 262-402
Jumper; for conductor entry; 2-way; insulated; gray

1.2.5 Marking

1.2.5.1 Marking strip

Item No.: 210-833
Marking strips; 25 m on roll; 6 mm wide; plain; Self-adhesive; white

Downloaded from Arrow.com.

1.2.6 Test and measurement

1.2.6.1 Testing accessories

Item No.: 249-140
Test plug module; without locking device; modular; for 4-conductor terminal blocks; gray

1.2.7 Tool

1.2.7.1 Operating tool

Item No.: 210-658
Operating tool; Blade: 3.5 x 0.5 mm; with a partially insulated shaft; angled; short; multi-coloured

Item No.: 210-720
Operating tool; Blade: 3.5 x 0.5 mm; with a partially insulated shaft; multicoloured

Item No.: 210-657
Operating tool; Blade: 3.5 x 0.5 mm; with a partially insulated shaft; short; multicoloured

Installation Notes

Installation

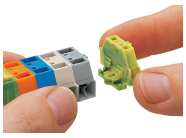

Assembling modular terminal blocks into terminal strips.

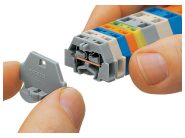

Mounting an end plate.

Conductor termination

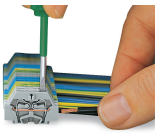

CAGE CLAMP® connection
Inserting a conductor.
With ferruled conductors, it is necessary to use a terminal block one size larger than the conductor's nominal cross-section.

Commoning

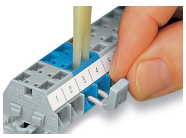

Commoning with comb-style jumper bar.

Downloaded from Arrow.com.

Marking

Marking with self-adhesive marking strips.

Marking by direct printing (upon request).

Downloaded from Arrow.com.