Rev	AWO #	Description	Date	Appr
-		RELEASED	12/9/14	

APPROVED: _____

DATE: _____ TITLE: _____

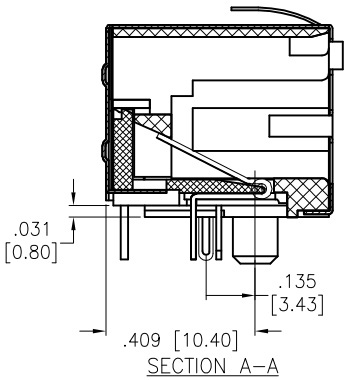

SECTION A–A

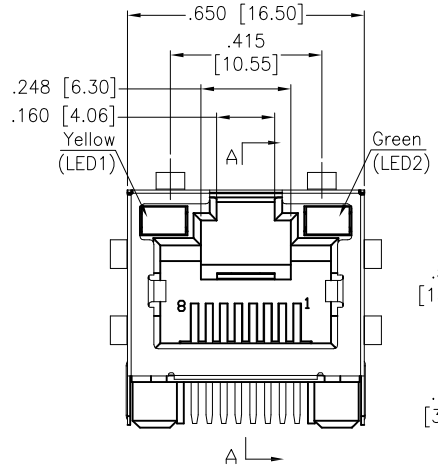

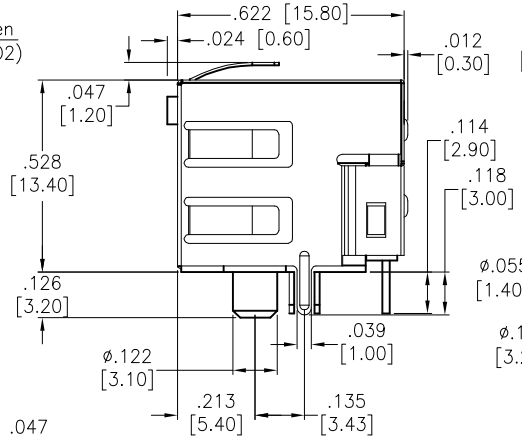

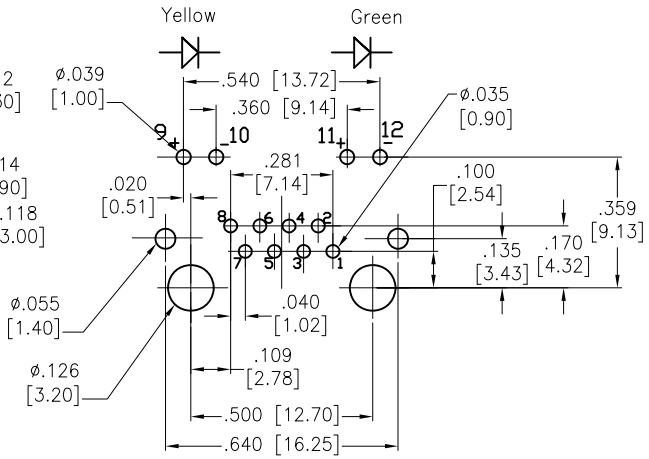

RECOMMENDED PCB LAYOUT

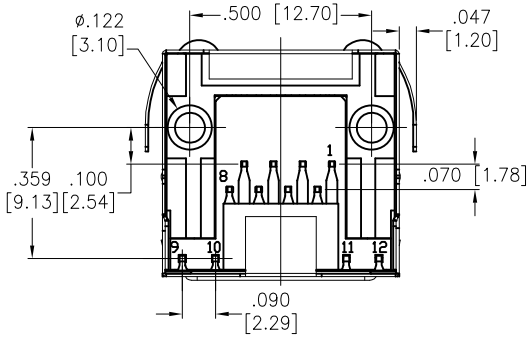

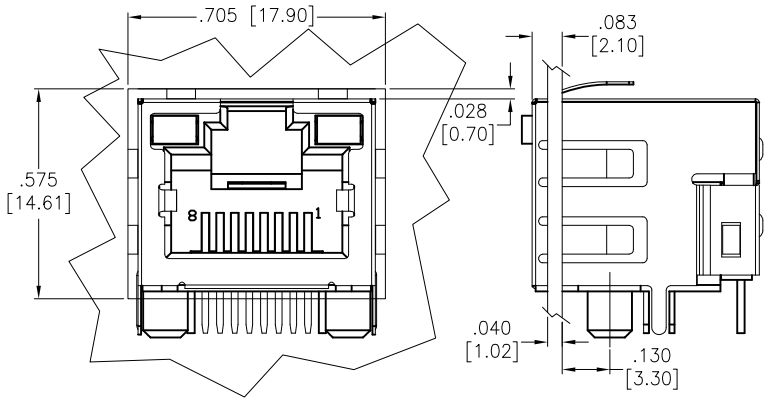

RECOMMENDED PANEL CUTOUT AND JACK LOCATION

SPECIFICATIONS:

Material:
Insulator: LCP, Hi–temp thermoplastic, rated UL 94V–0
Insulator color: Black
Contacts: Phosphor Bronze
Shield: Brass, Nickel plated

Plating:
Gold flash over Nickel underplate on contact area,
Tin over copper underplate on soldier tails.
(See chart for thickness)

Electrical:
Operating voltage: 150 VAC max
Current rating: 1.5 Amps max
Contact resistance: 20 mohms max. initial
Insulation resistance: 500 Mohms min
Dielectric withstanding voltage: 1,000 VAC for 1 minute

Temperature Rating:
Operating temperature: –40°C to +85°C

Environmental:
Lead free, RoHS compliant.

X	PLATING
0	15 µin Gold
1	30 µin Gold
2	50 µin Gold

RoHS COMPLIANT

UNLESS OTHERWISE SPECIFIED
ALL DIMENSIONS ARE INCHES [MM]
TOLERANCES: EXCEPT AS NOTED

INCHES		HOLES	
.X	± .10	Ø.X	±.10
.XX	± .020	Ø.XX	±.015
.XXX	± .015	Ø.XXX	±.010

APPROVALS		DATE
DRAWN	AY	12/9/14
CHECKED	NP	12/9/14
APPROVED		

ADAM TECH
909 Rahway Avenue, Union, NJ 07083
Phone: 908-687-5000 Fax: 908-687-5710

TITLE
MODULAR TELEPHONE JACK, R/A
W/ PANEL , LED1 YELLOW / LED2 GREEN

SIZE	PART NO.	REV.
X	MTJ-88ARX1C-FSM-PG-LG-HT	-

REF: S00005C | SCALE: NTS | SHEET 1 OF 1

Downloaded from Arrow.com.