CLIP HERE

REVISIONS				
ZONE	LTR	DESCRIPTION	DATE	APPROVED
—	A	INITIAL RELEASE NUM: 70094-19		

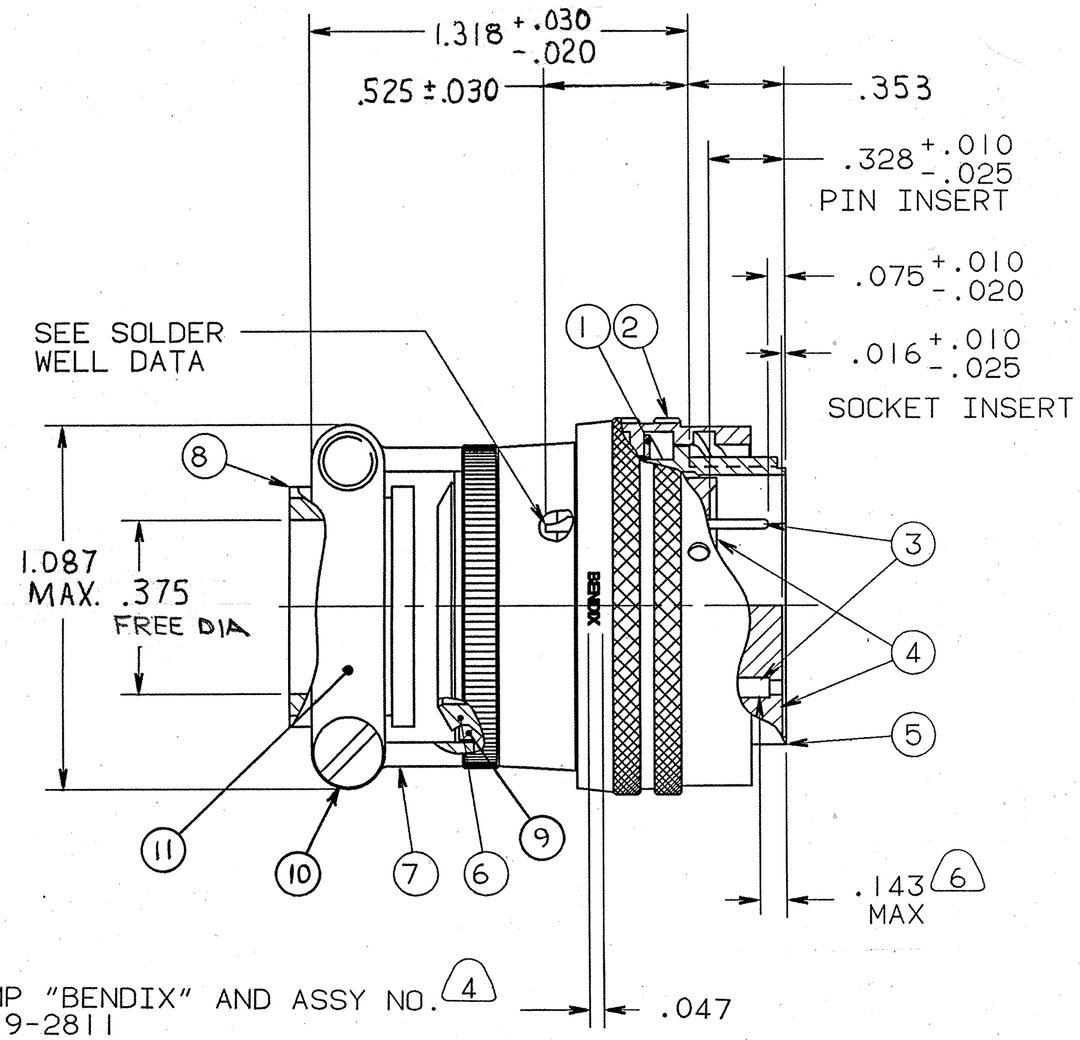

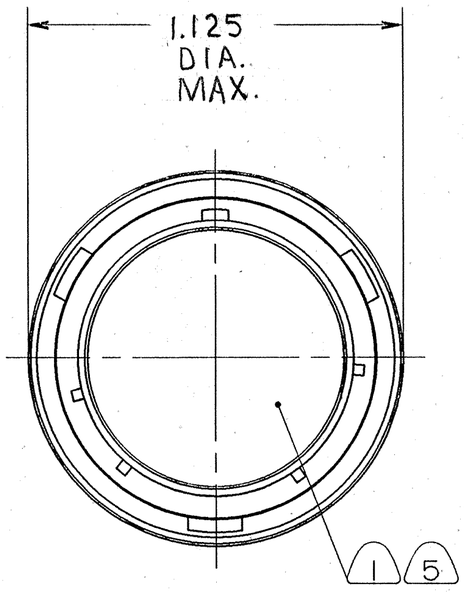

FIND NO.	QTY REQD.	FSCM NO.	PART NUMBER	DESCRIPTION	NOTE REF.
11	2		10-130511-143	CLAMP BAR	
10	2		10-101152-83	SCREW	
9	1		10-454396-14	SLEEVE	
8	1		10-36565-163	GROMMET	
7	1		10-101982-143	NUT	
6	1		10-113814-( )	GROMMET	
5	1		10-150906-143	SHELL	
4	1		10-101814-( )P	INSERT, PIN	5
4	1		10-101814-( )S	INSERT, SOCKET	5
3	SEE NOTE 3			CONTACT	5
2	1		10-123016-143	COUPLING	
1	1		10-123015-14	WASHER	

PARTS LIST

SEE SHEET 2

NOTES:

THE USE OF THIS DOCUMENT IS UNLIMITED. HOWEVER, DOCUMENTS REFERENCED HEREON MAY CONTAIN LIMITED RIGHTS DATA.

N/A
N/A
NEXT ASSEMBLY

UNLESS OTHERWISE SPECIFIED LINEAR DIMENSIONS ARE IN INCHES.
TOLERANCES: .XXX±.010, .XX ±.03, .X ±.1, ANGLES ±2°.
OTHER STANDARDS PER 9-3800 AND DOD-D-1000.
NOTE REF.= XX

SPECIFICATIONS	SIGNATURES	DATES
MATERIAL SPEC. N/A	PREPARED D. ALGER	1-6-94
	CHECKER Joe Matteo	1-7-94
	MATERIAL	
PROCESS SPEC. SEE NOTE 8	APPROVED	
	APPROVED K. Rau	1-10-94
	IST PART NO.	

AMPHENOL CORPORATION
BENDIX CONNECTOR OPERATIONS
SIDNEY, N.Y.

CONNECTOR, ELECTRICAL PLUG, TYPE PT06E14, SPECIAL, OLIVE DRAB CADMIUM PLATE — U

SIZE	FSCM NO.		REV.
C	77820	71-573156	A

SCALE NONE | WT. | REF 71-144606/650 | SHEET 1 OF 2

COMPUTER GENERATED DRAWING. 000000001 01800 TAB.

71-573156

IMAGED / Jun. 15 2004, 11:00 AM
Downloaded from Arrow.com.

ASSY NUMBER

PT. NO. REF

71-573156-() 06E-14-() (SR)

TO COMPLETE, ADD APPLICABLE INSERT ARRANGEMENT SUFFIX PER 9-2437-1

SOLDER WELL DATA			
CONTACT SIZE	20	16	12
WELL DIA	.046 +.004 -.000	.078 +.004 -.002	.116 +.004 -.000
WELL DEPTH +.031 -.000	.125	.188	.188

NOTES:

8. PROCESS SPEC:
   ASSY 9-3443-2, (SEE NOTE 9)
   TEST 9-3980-2
   9-2811, 9-2437-1.

7. UNITS MEET THE APPLICABLE REQUIREMENTS OF MIL-C-26482.

6. DISTANCE BETWEEN END OF SHELL & THE POINT AT WHICH A GAGE PIN, HAVING THE SAME BASIC DIAMETER AS THE MATING CONTACT & A SQUARE FACE, ENGAGES SOCKET CONTACT SPRING.

5. INSERT & CONTACTS ARE NOT REMOVABLE.

4. SEE WORK ORDER FOR PERMISSIBLE ADDITIONAL OR ALTERNATE STAMPING.

3. SEE SEPARATE PARTS LIST FOR COMPONENT PART NUMBERS AND QUANTITIES.

2. FOR MATING RECEPTACLE ASSEMBLY, SEE DRAWING 71-144006/50 & OTHERS.

1. FOR CONTACT ARRANGEMENT, SEE DRAWINGS L-15214-()

9. DRAWING ILLUSTRATES FINAL ASSY. FOR STORAGE AND SHIPPING, SHELL & CLAMP ASSY MAY BE LOOSELY COUPLED OR SHIPPED UNASSEMBLED.

THE USE OF THIS DOCUMENT IS UNLIMITED. HOWEVER, DOCUMENTS REFERENCED HEREON MAY CONTAIN LIMITED RIGHTS DATA.

SIZE	FSCM NO.		REV.
C	77820	71-573156	A
SCALE	WT.	REF	SHEET 2

TAB.

COMPUTER GENERATED DRAWING
IMAGED / Jun. 15 2004, 11:00 AM
Downloaded from Arrow.com.

71-573156