SERIES: VMS-300A | DESCRIPTION: AC-DC POWER SUPPLY

FEATURES

- up to 300W continuous power
- universal input voltage range
- industry standard 3" x 5" footprint
- power factor correction
- remote voltage sense & on/off control
- fan & 5 Vdc aux outputs
- covered and open-frame configurations
- over voltage, over current, over temperature, and short circuit protections
- medical 60601-1 (4th edition) safety approvals
- designed for 2 x MOPP applications
- efficiency up to 94%

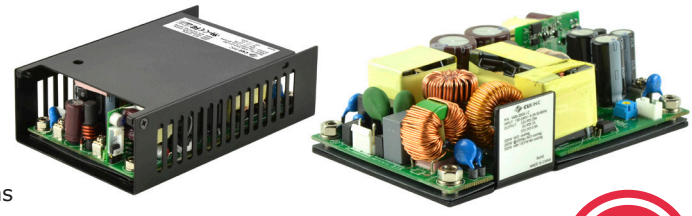

MODEL	output voltage (Vdc)	output current max (A)	output power[1] max (W)	ripple and noise[2] max (mVp-p)	efficiency[3] typ (%)
VMS-300A-12	12	25	300	120	92.5
VMS-300A-24	24	12.5	300	150	93.5
VMS-300A-36	36	8.34	300	150	93.5
VMS-300A-48	48	6.25	300	150	94
Vstb[4]	5	1	5	100	--

Notes:
1. Maximum output power of 300 W (5 W for Vstb) with 10 CFM forced air, 200 W (3 W for Vstb) with convection cooling.
2. At full load, nominal input, 20 MHz bandwidth oscilloscope, output terminated with 10 µF electrolytic and 0.1 µF ceramic capacitors.
3. At full load, 25°C, 230 Vac input.
4. Standby output voltage. Present on all models.
5. All specifications are measured at Ta=25°C, 230 Vac input voltage, and 60% rated output load unless otherwise specified.

PART NUMBER KEY

VMS-300A - XX - XXX - X

- VMS-300A: Base Number
- XX: Output Voltage
- XXX: Chassis:
  "blank" = open-frame
  CNF = covered
- X: Input Connector:
  "blank" = TAIWAN KING PIN TERMINAL PVHI series
  1 = LONG CHU P3060 series

Please read our datasheet & drawing disclaimer here.

Downloaded from Arrow.com.

INPUT

parameter	conditions/description	min	typ	max	units
voltage		90		264	Vac
frequency		47		63	Hz
current	at 100 Vac at 240 Vac			4.0 1.8	A A
inrush current	at 240 Vac, 25°C, cold start			30	A
leakage current				0.3	mA
leakage current (enclosure/ patient)				0.1	mA
power factor correction	meets EN 61000-3-2				
no load power consumption	measured with the PS-ON signal configured to OFF			0.3	W

OUTPUT

parameter	conditions/description	min	typ	max	units
output capacitance	at 115/230 Vac, full load 12 Vdc output models 24 Vdc output models 36 Vdc output models 48 Vdc output models			 25,000 12,500 5,000 3,750	 µF µF µF µF
initial set point accuracy	at full load, 25°C Vo Vstb		 ±1 ±3		 % %
line regulation	high line to low line at full load Vo Vstb		 ±0.5 ±1		 % %
load regulation	from full to 10% load Vo Vstb		 ±1 ±5		 % %
hold-up time	at 115 Vac		16		ms
adjustability	built in trim pot (VR)		±5		%
switching frequency	at full load	60		80	kHz
temperature coefficient			±0.05		%/°C
PS-ON signal[1]	power on: PS-ON	0		2	Vdc
	power on: PS-ON = 0V		4.5		mA
	power off: PS-ON = NC (internal circuit will drive PS-On to 11~16 Vdc)				
	power off: PS-ON = NC		0		mA
power good (PG)	TTL goes high 50~250 ms after powered on TTL goes low 5~20 ms before 90% Vo				
standby output voltage	5 Vdc / 1 A				
fan output	12 Vdc / 500 mA				

Notes: 1. When not used, short PS-ON & signal GND.

PROTECTIONS

parameter	conditions/description	min	typ	max	units
over voltage protection	latch mode 12 Vdc output models 24 Vdc output models 36 Vdc output models 48 Vdc output models		 15 30 43 56		 Vdc Vdc Vdc Vdc
over current protection		130	150	180	%
short circuit protection	hiccup, auto recovery				
over temperature protection	auto recovery (temperature of C37)			110	°C

Downloaded from Arrow.com.

SAFETY & COMPLIANCE

parameter	conditions/description	min	typ	max	units
isolation voltage	input to output (2MOPP) for 1 minute input to earth (1MOPP) for 1 minute output to earth (1MOPP) for 1 minute			4,000 1,500 1,500	Vac Vac Vac
isolation resistance		100			MΩ
safety approvals	UL/cUL 60601-1, IEC 60601-1, EN 60601-1 (4th edition)				
safety class	class I				
EMI/EMC	EN55011, EN55022 Class B, EN55024, FCC Class B, EN61204-3, EN61000-6-1, EN61000-6-3, EN60601-1-2, EN61000-3-2, EN61000-3-3				
MTBF	as per MIL-HDBK-217F, at 115 Vac, 25°C, GB		100,000		hours
RoHS	2011/65/EU				

Notes: 1. The power supply is considered a component which will be installed into final equipment. The final equipment still must be tested to meet the necessary EMC directives.

ENVIRONMENTAL

parameter	conditions/description	min	typ	max	units
operating temperature	see derating curves	-40		80	°C
storage temperature		-40		85	°C
operating humidity	non-condensing			93	%
operating altitude			3000		m
vibration[2]	as per MIL-STD-810F Table 514.5C-VIII; 15~2000 Hz for 1 hour on each axis for 3 hours		4		G
shock[2]	as per MIL-STD-810F Table 516.5, Table 516.5-1; for 10 ms on each axis 3 times		75		G

Notes: 2. See Installation Instructions for mounting requirements.

DERATING CURVES

INPUT VOLTAGE DERATING CURVE
VMS-300A
(natural convection)

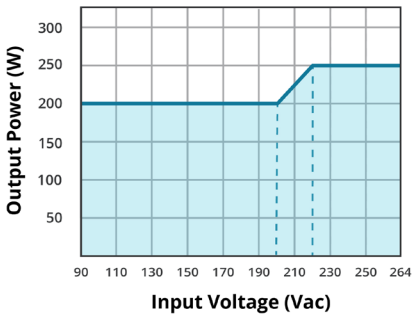

INPUT VOLTAGE DERATING CURVE
VMS-300A-CNF
(natural convection)

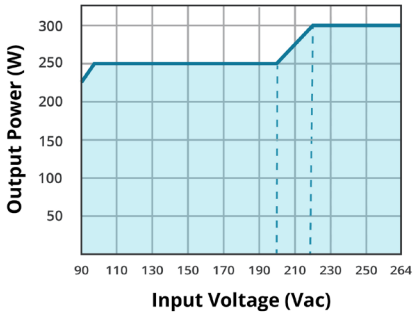

TEMPERATURE DERATING CURVE
VMS-300A
(natural convection)

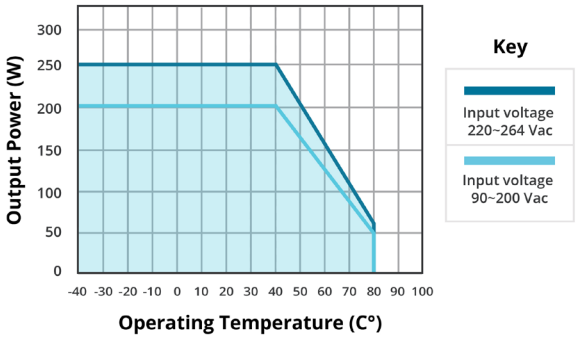

TEMPERATURE DERATING CURVE
VMS-300A-CNF
(natural convection)

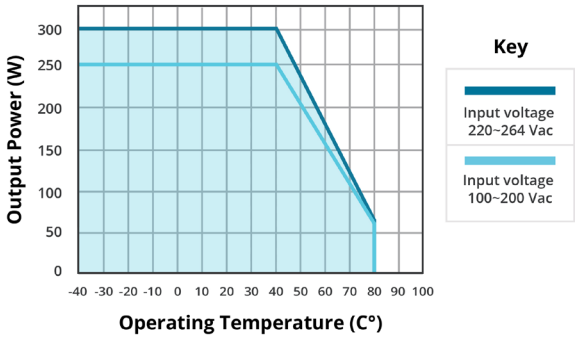

Downloaded from Arrow.com.

DERATING CURVES (CONTINUED)

TEMPERATURE DERATING CURVE
VMS-300A
(with 10 CFM airflow)

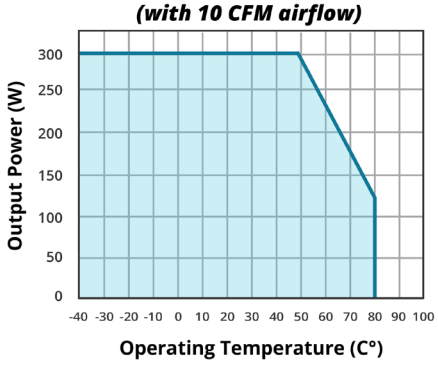

TEMPERATURE DERATING CURVE
VMS-300A-CNF
(with 10 CFM airflow)

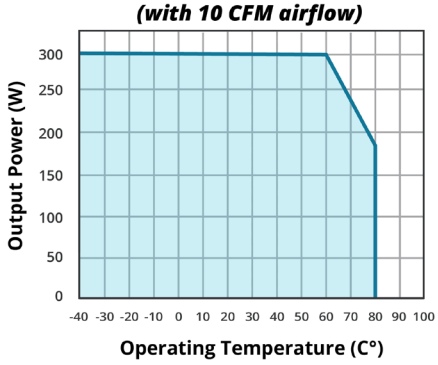

EFFICIENCY CURVES

EFFICIENCY VS OUTPUT LOAD
(at 25 °C)
12 Vdc output

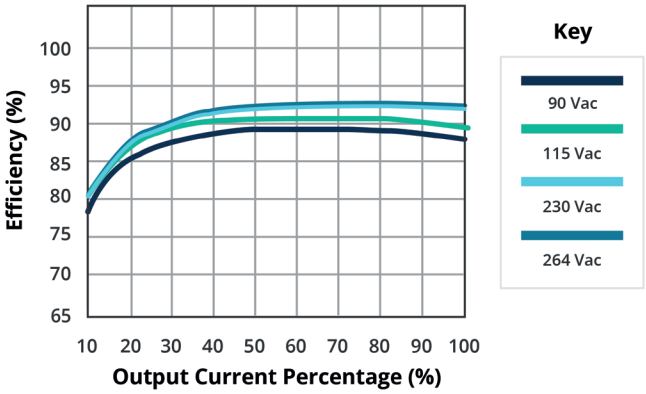

EFFICIENCY VS OUTPUT LOAD
(at 25 °C)
24 Vdc output

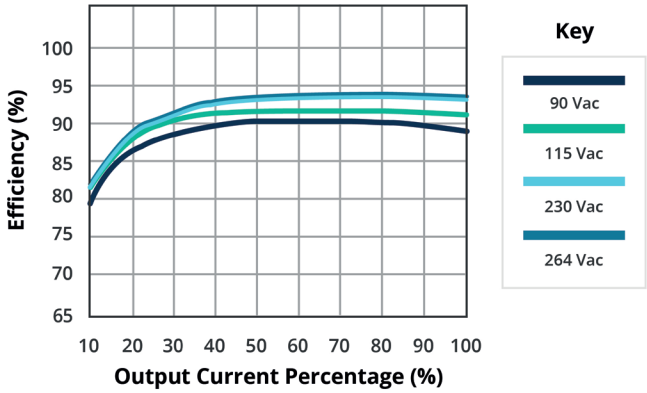

EFFICIENCY VS OUTPUT LOAD
(at 25 °C)
36 Vdc output

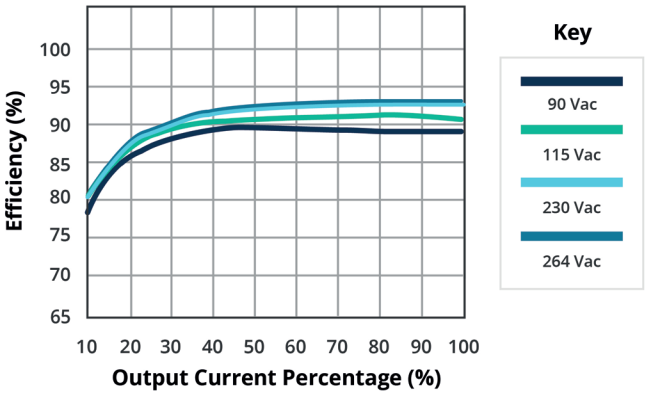

EFFICIENCY VS OUTPUT LOAD
(at 25 °C)
48 Vdc output

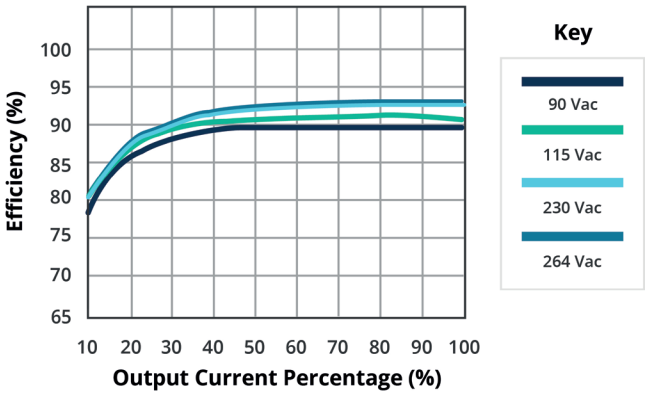

Downloaded from Arrow.com.

MECHANICAL

parameter	conditions/description	min	typ	max	units
dimensions	VMS-300A models: 5.00 x 3.00 x 1.38 (127 x 76.2 x 35.1 mm) VMS-300A-CNF models: 5.35 x 3.46 x 1.59 (136 x 88 x 40.4 mm)				inch inch
weight	VMS-300A models VMS-300A-CNF models		410 515		g g
cooling	external fan				
CN1 input connector	CN1 mates with JST housing VHR series or equivalent				
CN1 input connector (optional)	CN1 mates with MOLEX housing 5195 series or equivalent				
CN4 output connector	CN4 mates with JST housing PH series or equivalent				
CN5 output connector	CN5 mates with JST housing PH series or equivalent				
output terminals	+Vo & -Vo terminals are M3 screws that mate with round or Y terminals with max OD of 6.75 mm and max ID of 3.9 mm				

MECHANICAL DRAWING

Open-frame
units: inch [mm]
tolerance: X.XXX = ±0.020 [±0.50]

CN1	
PIN	Function
1	ACL
2	-
3	ACN

CN4	
PIN	Function
1	-FAN
2	+FAN
3	GND
4	+5 VSB
5	GND
6	PS-ON

CN5	
PIN	Function
1	GND
2	PG
3	-Sense
4	+Sense

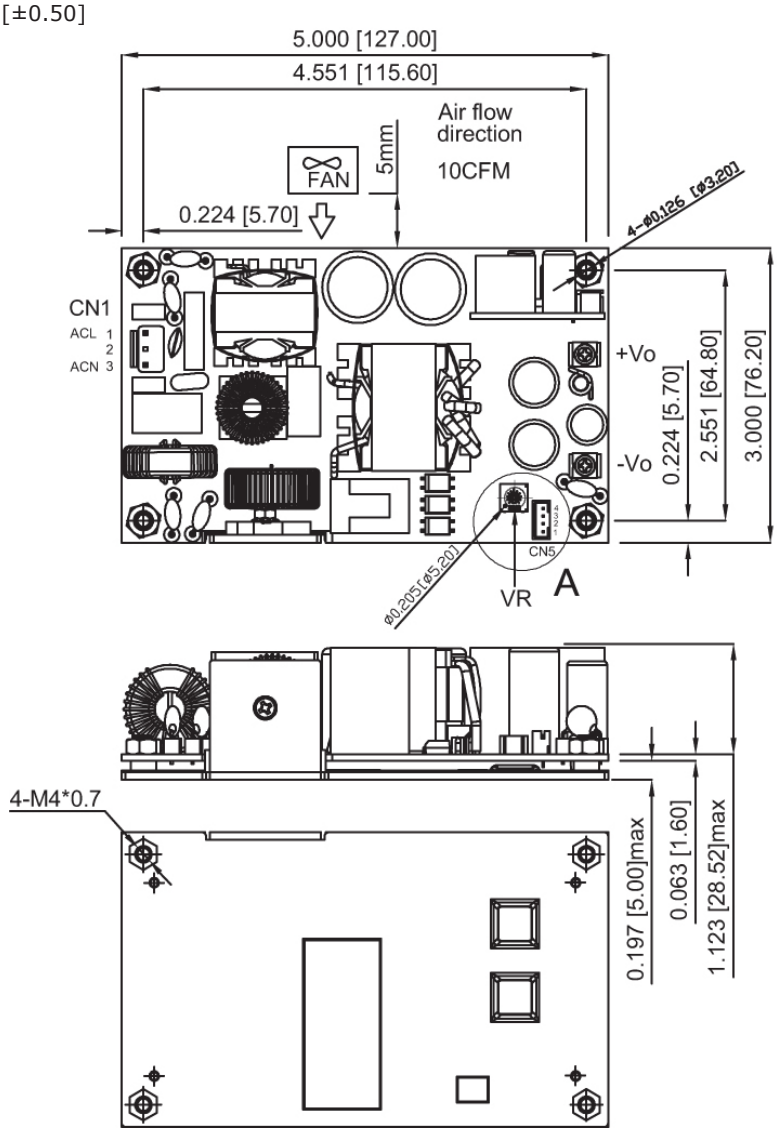

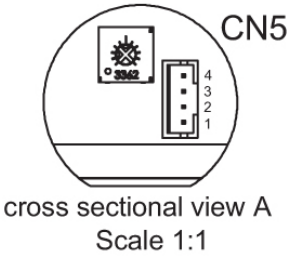

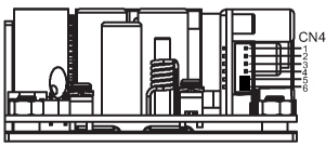

Downloaded from Arrow.com.

MECHANICAL DRAWING (CONTINUED)

Covered
units: inch [mm]
tolerance: X.XXX = ±0.020 [±0.50]

CN1	
PIN	Function
1	ACL
2	-
3	ACN

CN4	
PIN	Function
1	-FAN
2	+FAN
3	GND
4	+5 VSB
5	GND
6	PS-ON

CN5	
PIN	Function
1	GND
2	PG
3	-Sense
4	+Sense

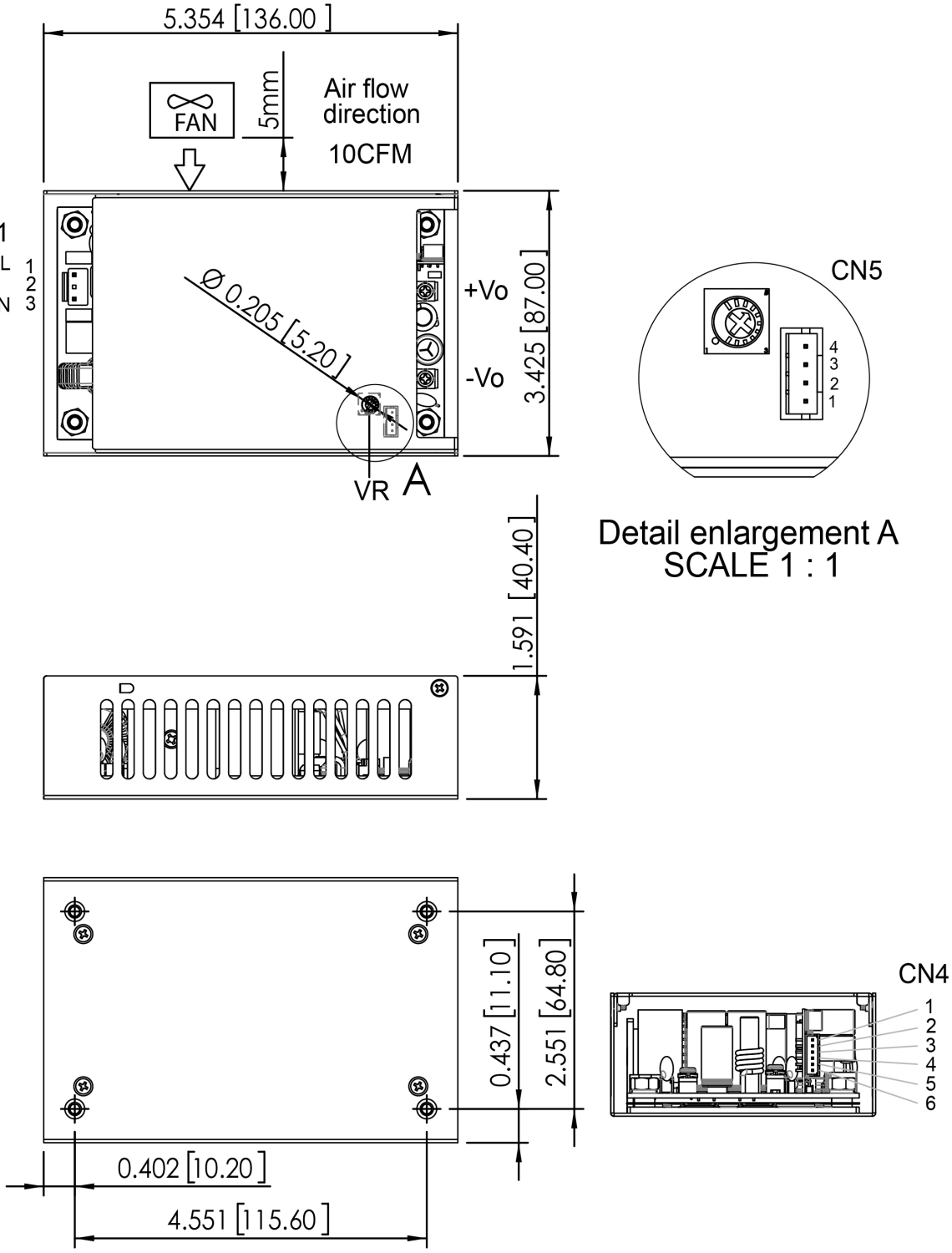

Downloaded from Arrow.com.

INSTALLATION INSRUCTIONS

The VMS-300A series has (4) 4 mm diameter mounting holes that can be used in (3) types of installations.

Type 1
Mounting from top with spacers (required to meet vibration specifications)

Spacer: 4 mm diameter max, 8 mm high minimum
Screw Size: (4) M3X0.5
Mounting torque: 3 kgf-cm

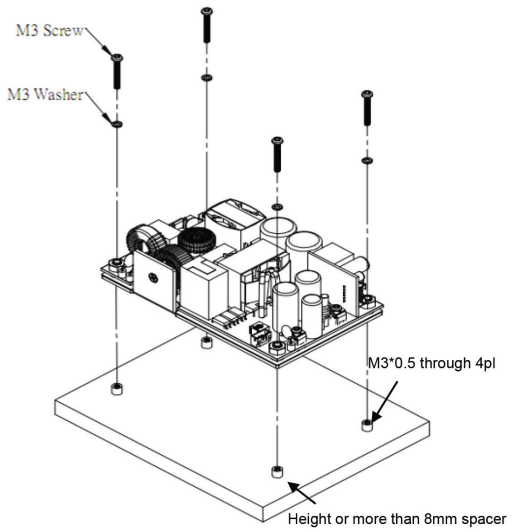

Type 2
Mounting from top without spacers

Screw Size: (4) M3X0.5
Mounting torque: 3 kgf-cm

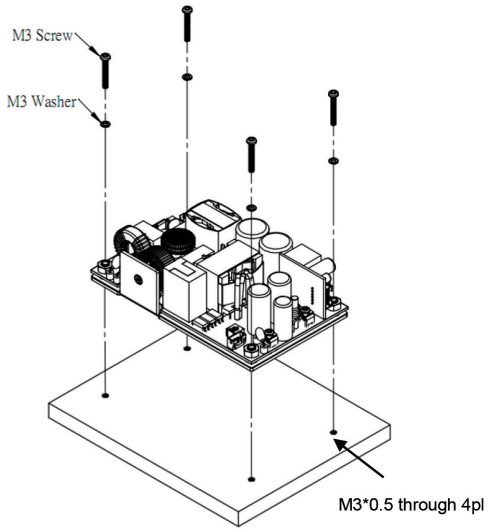

Type 3
Mounting from bottom

Screw Size: (4) M4X0.7
Mounting torque: 7 kgf-cm

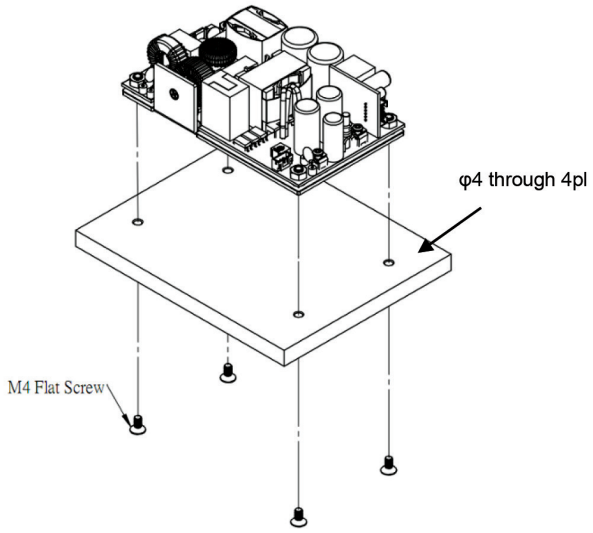

Mounting Torque

VMS-300A

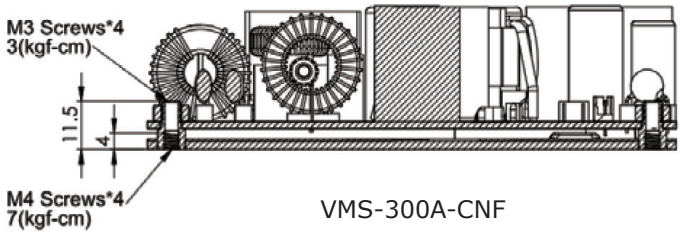

VMS-300A-CNF

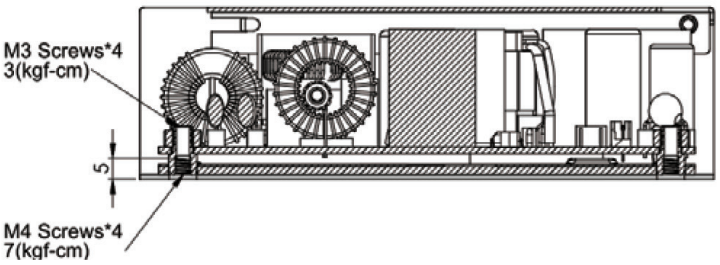

Downloaded from Arrow.com.

INSTALLATION INSRUCTIONS (CONTINUED)

Output Terminals

Mate with round or Y terminals with max OD of 6.75 mm and max ID of 3.9 mm

Terminal Size: (2) M3
Torque: 3 kgf-cm

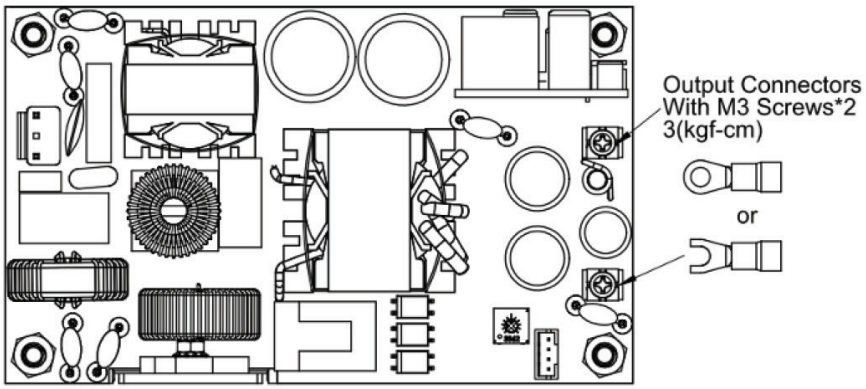

Mounting Clearance

Allow at least 4 mm side clearance and 5 mm height clearance. If clearances aren't met, the isolation and withstand specifications may not be met.

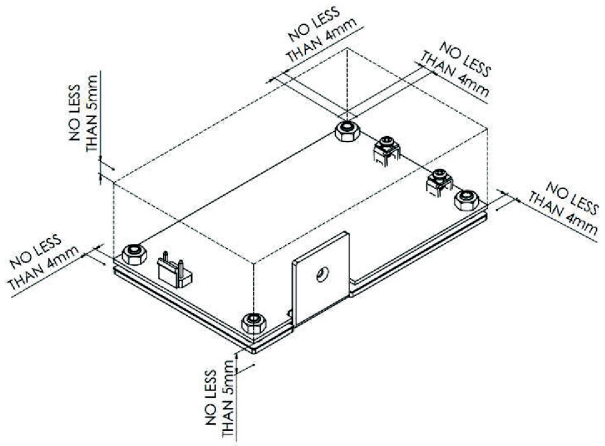

Field Ground

Should be connected to the earth (ground) terminal of the apparatus otherwise conducted noise and output noise will increase.

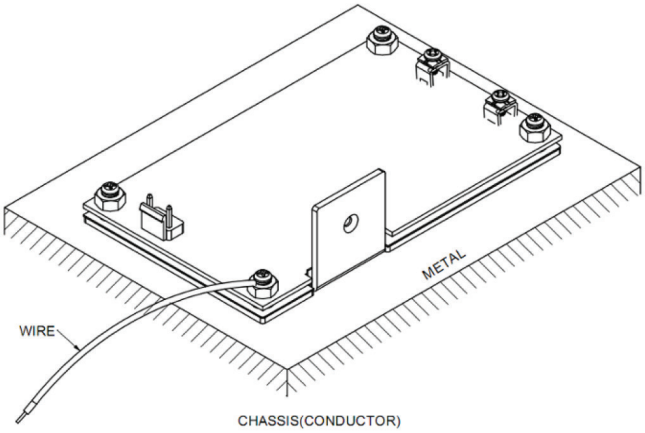

Downloaded from Arrow.com.

APPLICATION NOTES

On/off Remote Control

A PS On/Off remote control is provided in CN4. See Figure 1 for the PS-ON diagram and control function.

Figure 1

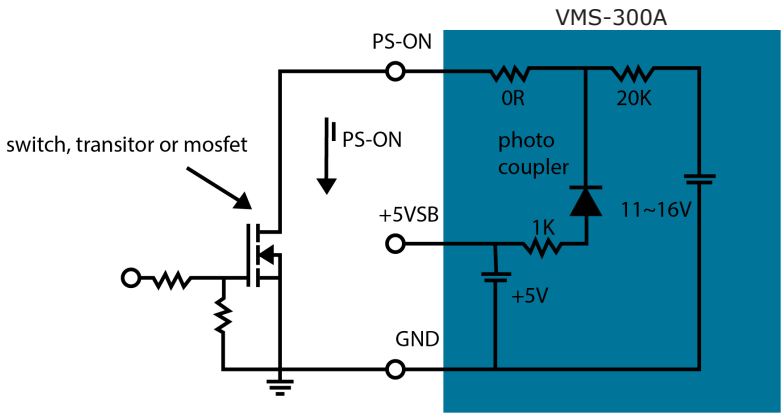

Note: Power on: $V_{PS\text{-}ON} \leq 2V$, $I_{PS\text{-}ON} \geq 2$ mA
(PS-ON and GND short, $I_{PS\text{-}ON} = 4.5$ mA typical)
Power off: Open circuit, $V_{PS\text{-}ON} = 11\sim16$ V
When the PS On/off remote control function is not used, connect a short circuit between the PS-ON control & the signal GND.

Output Remote Sensing

The VMS-300A series can remotely sense both lines of the output. The feature moves the effective voltage regulation point from the output of the unit to the point of connection of the remote sense pins. This feature automatically adjusts the real output in order to compensate for voltage drops in distribution and maintain a regulated voltage at the point of load. The remote sense voltage range is as follows:

$$[(+Vout) - (-Vout)] - [(+Sense) - (-Sense)] \leq 10\%\ Vo_nominal$$

If the remote sense is not used, the sense pins should be connected locally to the respective Vout pins. The remote sense pins are located on CN5.

Figure 2

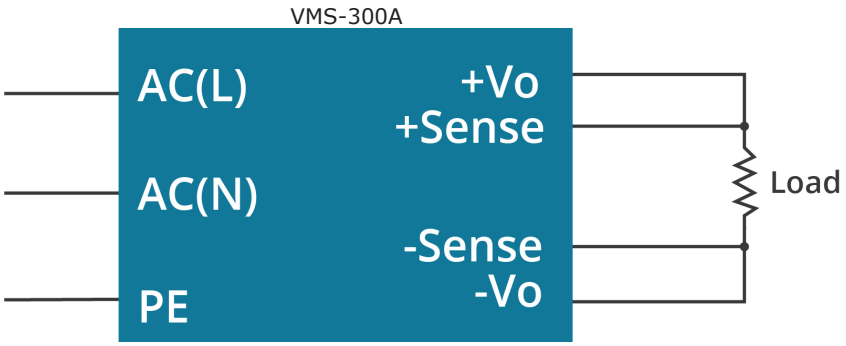

Downloaded from Arrow.com.

REVISION HISTORY

rev.	description	date
1.0	initial release	12/06/2016
1.01	updated safety approvals to 4th edition	05/16/2017
1.02	updated datasheet	01/31/2018
1.03	company logo updated	12/17/2020
1.04	output remote sensing updated	02/09/2021
1.05	curves and figures updated	05/04/2021
1.06	mechanical drawing updated	06/09/2021
1.07	derating curves updated	06/23/2022
1.08	mechanical drawing for covered model updated	10/11/2022
1.10	UKCA mark added	10/27/2022

The revision history provided is for informational purposes only and is believed to be accurate.

CUI INC
a bel group

Headquarters
20050 SW 112th Ave.
Tualatin, OR 97062
800.275.4899

Fax 503.612.2383
cui.com
techsupport@cui.com

CUI offers a two (2) year limited warranty. Complete warranty information is listed on our website.

CUI reserves the right to make changes to the product at any time without notice. Information provided by CUI is believed to be accurate and reliable. However, no responsibility is assumed by CUI for its use, nor for any infringements of patents or other rights of third parties which may result from its use.

CUI products are not authorized or warranted for use as critical components in equipment that requires an extremely high level of reliability. A critical component is any component of a life support device or system whose failure to perform can be reasonably expected to cause the failure of the life support device or system, or to affect its safety or effectiveness.

Downloaded from Arrow.com.