Series 40 TAG Ring® Backshells

for MIL-DTL-38999 Series I and II Connectors

407F*037 TAG Ring® Backshell, Banding, Shrink Boot

Self-Locking

Self-locking. Boot groove. Banding platform. 407F*037 backshell fits MIL-DTL-38999 Series I and II connectors. Grounding ring has slots for individual cable shields. Attch overall cable shield to banding platform with BandMaster ATS strap (not supplied). Install shrink boot for strain relief and environmental sealing. Anti-decoupling mechanism provides audible detented coupling and prevents backoff under high vibration. Aluminum or SST. Gold plated copper alloy ground spring, PTFE washer. Silicone O-ring.

- Terminal-And-Grounding (TAG) ring for individual shields
- Banding platform for overall shield
- Gold-plated ground spring
- Self-locking coupling nut
- Groove for lipped shrink boot

Adapter Code F

This accessory fits these connectors:
MIL-DTL-38999 Series I and Series II

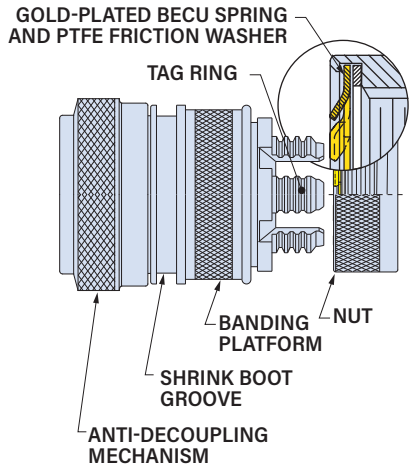

PART NUMBER

	407FS037	Z1	14	04	G	3	S

Base P/N	**407FS037**	Straight
	407FJ037	90°
Material/Finish	**M**	Alum/ Electroless Nickel
	MT	Alum/ Nickel-PTFE
	NF	Alum/ Olive Drab Cadmium
	ZR	Alum/ Black Zinc-Nickel
	TZ	Alum/ Tin-Zinc
	Z1	SST/ Passivate

Shell Size

Shell Size								
38999 Series I	9	11	13	15	17	19	21	23	25
38999 Series II	8	10	12	14	16	18	20	22	24
Size Code	**08**	**10**	**12**	**14**	**16**	**18**	**20**	**22**	**24**

Entry Size	*See Table 1*	
Strain Relief	**G**	Nut
Length	**3**	1.5 inches
	4	2.0 inches
	5	2.5 inches
	6	3.0 inches
		Applies to straight profile only (407FS037)
Self-Locking	**S**	Self-Locking Coupling Nut

TABLE 1: ENTRY SIZE

Entry Size	F Max in	F Max mm	G Max in	G Max mm	Cable Entry Min. in	Cable Entry Min. mm	Cable Entry Max. in	Cable Entry Max. mm	No. of Slots	Shell Size Range
02	.545	13.8	.650	16.5	.125	3.2	.250	6.4	3	08-24
03	.670	17.0	.774	19.7	.250	6.4	.375	9.5	4	10-24
04	.795	20.2	.963	24.5	.375	6.4	.500	12.7	6	12-24
05	.920	23.4	1.042	26.5	.500	9.5	.625	15.9	8	14-24
06	1.045	26.5	1.217	30.9	.625	12.7	.750	19.1	10	16-24
07	1.170	29.7	1.355	34.4	.750	19.1	.875	22.2	10	18-24
08	1.295	32.9	1.443	36.7	.875	22.2	1.000	25.4	12	20-24
09	1.420	36.1	1.709	43.4	.937	23.8	1.125	28.6	15	22-24
10	1.670	42.4	1.919	48.7	1.062	27.0	1.250	31.8	15	24

Shell Size	A Thread UNEF-2B	øB Max. in	øB Max. mm	K Max. in	K Max. mm	L Max. in	L Max. mm	Max. Entry Size
8/9	0.4375-28	.86	21.8	.906	23.0	2.35	59.7	**02**
10/11	0.5625-24	.97	24.6	.966	24.5	2.41	61.2	**03**
12/13	0.6875-24	1.11	28.2	1.026	26.1	2.47	62.7	**04**
14/15	0.8125-20	1.21	30.7	1.076	27.3	2.54	64.5	**05**
16/17	0.9375-20	1.35	34.3	1.136	28.9	2.60	66.0	**06**
18/19	1.0625-18	1.46	37.1	1.176	29.9	2.62	66.5	**07**
20/21	1.1875-18	1.60	40.6	1.236	31.4	2.68	68.1	**08**
22/23	1.3125-18	1.70	43.2	1.296	32.9	2.76	70.1	**09**
24/25	1.4375-18	1.84	46.7	1.356	34.4	2.83	71.9	**10**

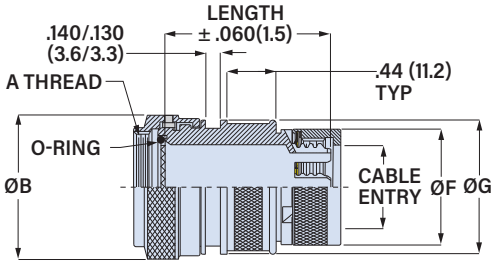

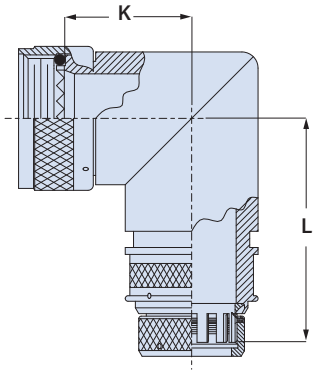

© 2022 Glenair, Inc • 1211 Air Way, Glendale, CA 91201 • 818-247-6000 • www.glenair.com • U.S. CAGE code 06324 • Circular Connector Accessories
Dimensions in Inches (millimeters) are subject to change without notice.

Downloaded from Arrow.com.