AT25SF041

4-Mbit, 2.5V Minimum
SPI Serial Flash Memory with Dual-I/O and Quad-I/O Support

Features

- Single 2.5V - 3.6V Supply
- Serial Peripheral Interface (SPI) Compatible
  - Supports SPI Modes 0 and 3
  - Supports Dual and Quad Output Read
- 104MHz Maximum Operating Frequency
  - Clock-to-Output (t_V) of 6 ns
- Flexible, Optimized Erase Architecture for Code + Data Storage Applications
  - Uniform 4-Kbyte Block Erase
  - Uniform 32-Kbyte Block Erase
  - Uniform 64-Kbyte Block Erase
- Full Chip Erase
- Hardware Controlled Locking of Protected Blocks via $\overline{WP}$ Pin
- 3 Protected Programmable Security Register Pages
- Flexible Programming
  - Byte/Page Program (1 to 256 Bytes)
- Fast Program and Erase Times
  - 0.7ms Typical Page Program (256 Bytes) Time
  - 70ms Typical 4-Kbyte Block Erase Time
  - 300ms Typical 32-Kbyte Block Erase Time
  - 600ms Typical 64-Kbyte Block Erase Time
- JEDEC Standard Manufacturer and Device ID Read Methodology
- Low Power Dissipation
  - 2µA Deep Power-Down Current (Typical)
  - 10µA Standby current (Typical)
  - 4mA Active Read Current (Typical)
- Endurance: 100,000 Program/Erase Cycles
- Data Retention: 20 Years
- Complies with Full Industrial Temperature Range
- Industry Standard Green (Pb/Halide-free/RoHS Compliant) Package Options
  - 8-lead SOIC (150-mil and 208-mil)
  - 8-pad Ultra Thin DFN (5 x 6 x 0.6 mm and 2 x 3 x 0.6 mm)
  - 8-lead TSSOP (4 x 4 mm)
  - Die in Wafer Form

Downloaded from Arrow.com.

Description

The Adesto® AT25SF041 is a serial interface Flash memory device designed for use in a wide variety of high-volume consumer based applications in which program code is shadowed from Flash memory into embedded or external RAM for execution. The flexible erase architecture of the AT25SF041 is ideal for data storage as well, eliminating the need for additional data storage devices.

The erase block sizes of the AT25SF041 have been optimized to meet the needs of today's code and data storage applications. By optimizing the size of the erase blocks, the memory space can be used much more efficiently. Because certain code modules and data storage segments must reside by themselves in their own erase regions, the wasted and unused memory space that occurs with large block erase Flash memory devices can be greatly reduced. This increased memory space efficiency allows additional code routines and data storage segments to be added while still maintaining the same overall device density.

The device also contains three pages of Security Register that can be used for purposes such as unique device serialization, system-level Electronic Serial Number (ESN) storage, locked key storage, etc. These Security Register pages can be individually locked.

1. Pin Descriptions and Pinouts

Table 1-1. Pin Descriptions

Symbol	Name and Function	Asserted State	Type
$\overline{CS}$	**CHIP SELECT:** Asserting the $\overline{CS}$ pin selects the device. When the $\overline{CS}$ pin is deasserted, the device will be deselected and normally be placed in standby mode (not Deep Power-Down mode), and the SO pin will be in a high-impedance state. When the device is deselected, data will not be accepted on the SI pin. A high-to-low transition on the $\overline{CS}$ pin is required to start an operation, and a low-to-high transition is required to end an operation. When ending an internally self-timed operation such as a program or erase cycle, the device will not enter the standby mode until the completion of the operation.	Low	Input
SCK	**SERIAL CLOCK:** This pin is used to provide a clock to the device and is used to control the flow of data to and from the device. Command, address, and input data present on the SI pin is always latched in on the rising edge of SCK, while output data on the SO pin is always clocked out on the falling edge of SCK.	-	Input
SI (I/O_0)	**SERIAL INPUT:** The SI pin is used to shift data into the device. The SI pin is used for all data input including command and address sequences. Data on the SI pin is always latched in on the rising edge of SCK. With the Dual-Output and Quad-Output Read commands, the SI Pin becomes an output pin (I/O_0) in conjunction with other pins to allow two or four bits of data on (I/O_{3-0}) to be clocked in on every falling edge of SCK To maintain consistency with the SPI nomenclature, the SI (I/O_0) pin will be referenced as the SI pin unless specifically addressing the Dual-I/O and Quad-I/O modes in which case it will be referenced as I/O_0 Data present on the SI pin will be ignored whenever the device is deselected ($\overline{CS}$ is deasserted).	-	Input/Output

Downloaded from Arrow.com.

Table 1-1. Pin Descriptions (Continued)

Symbol	Name and Function	Asserted State	Type
SO (I/O_1)	**SERIAL OUTPUT:** The SO pin is used to shift data out from the device. Data on the SO pin is always clocked out on the falling edge of SCK. With the Dual-Output Read commands, the SO Pin remains an output pin (I/O_0) in conjunction with other pins to allow two bits of data on (I/O_{1-0}) to be clocked in on every falling edge of SCK To maintain consistency with the SPI nomenclature, the SO (I/O_1) pin will be referenced as the SO pin unless specifically addressing the Dual-I/O modes in which case it will be referenced as I/O_1 The SO pin will be in a high-impedance state whenever the device is deselected ($\overline{CS}$ is deasserted).	-	Input/Output
$\overline{WP}$ (I/O_2)	**WRITE PROTECT:** The $\overline{WP}$ pin controls the hardware locking feature of the device. With the Quad-Output Read commands, the $\overline{WP}$ Pin becomes an output pin (I/O_2) in conjunction with other pins to allow four bits of data on ($I/O3_{3-0}$) to be clocked in on every falling edge of SCK. To maintain consistency with the SPI nomenclature, the $\overline{WP}$ (I/O_2) pin will be referenced as the $\overline{WP}$ pin unless specifically addressing the Quad-I/O modes in which case it will be referenced as I/O_2 The $\overline{WP}$ pin is internally pulled-high and may be left floating if hardware controlled protection will not be used. However, it is recommended that the $\overline{WP}$ pin also be externally connected to V_{CC} whenever possible.	-	Input/Output
$\overline{HOLD}$ (I/O_3)	**HOLD:** The $\overline{HOLD}$ pin is used to temporarily pause serial communication without deselecting or resetting the device. While the $\overline{HOLD}$ pin is asserted, transitions on the SCK pin and data on the SI pin will be ignored, and the SO pin will be in a high-impedance state. The $\overline{CS}$ pin must be asserted, and the SCK pin must be in the low state in order for a Hold condition to start. A Hold condition pauses serial communication only and does not have an effect on internally self-timed operations such as a program or erase cycle. Please refer to "Hold Function" on page 31 for additional details on the Hold operation. With the Quad-Output Read commands, the $\overline{HOLD}$ Pin becomes an output pin (I/O_3) in conjunction with other pins to allow four bits of data on ($I/O3_{3-0}$) to be clocked in on every falling edge of SCK. To maintain consistency with the SPI nomenclature, the $\overline{HOLD}$ (I/O_3) pin will be referenced as the $\overline{HOLD}$ pin unless specifically addressing the Quad-I/O modes in which case it will be referenced as I/O_3 The $\overline{HOLD}$ pin is internally pulled-high and may be left floating if the Hold function will not be used. However, it is recommended that the $\overline{HOLD}$ pin also be externally connected to V_{CC} whenever possible.	-	Input/Output
V_{CC}	**DEVICE POWER SUPPLY:** The V_{CC} pin is used to supply the source voltage to the device. Operations at invalid V_{CC} voltages may produce spurious results and should not be attempted.	-	Power
GND	**GROUND:** The ground reference for the power supply. GND should be connected to the system ground.	-	Power

Downloaded from Arrow.com.

Figure 1-1. 8-SOIC, 8-TSSOP (Top View)

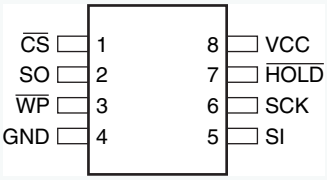

Figure 1-2. 8-UDFN (Top View)

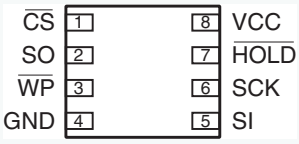

2. Block Diagram

Figure 2-1. Block Diagram

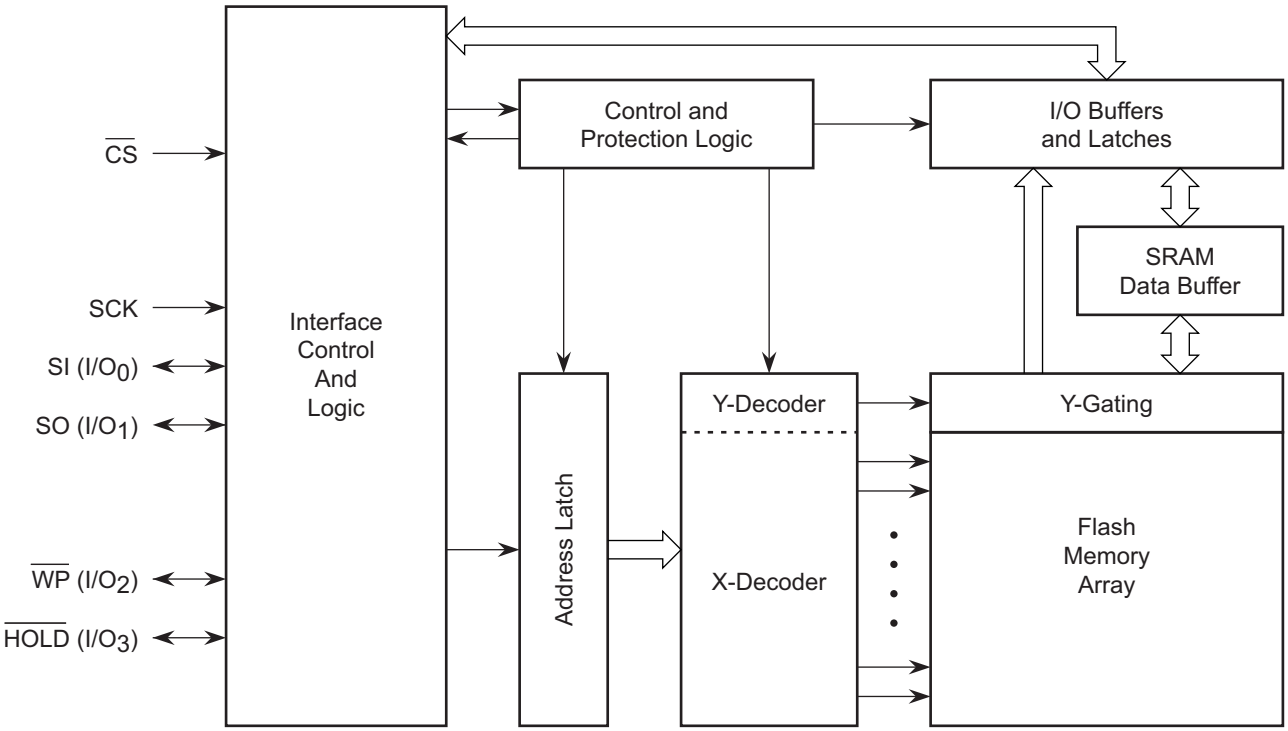

Note: I/O_{3-0} pin naming convention is used for Dual-I/O and Quad-I/O commands.

3. Memory Array

To provide the greatest flexibility, the memory array of the AT25SF041 can be erased in four levels of granularity including a full chip erase. The size of the erase blocks is optimized for both code and data storage applications, allowing both code and data segments to reside in their own erase regions. The Memory Architecture Diagram illustrates the breakdown of each erase level.

Downloaded from Arrow.com.

Figure 3-1. Memory Architecture Diagram

Block Erase Detail				Page Program Detail	
64KB Block Erase (D8h Command)	32KB Block Erase (52h Command)	4KB Block Erase (20h Command)	Block Address Range	1-256 Byte Page Program (02h Command)	Page Address Range
64KB Sector 7	32KB	4KB	07FFFFh – 07F000h	256 Bytes	07FFFFh – 07FF00h
		4KB	07EFFFh – 07E000h	256 Bytes	07FEFFh – 07FE00h
		4KB	07DFFFh – 07D000h	256 Bytes	07FDFFh – 07FD00h
		4KB	07CFFFh – 07C000h	256 Bytes	07FCFFh – 07FC00h
		4KB	07BFFFh – 07B000h	256 Bytes	07FBFFh – 07FB00h
		4KB	07AFFFh – 07A000h	256 Bytes	07FAFFh – 07FA00h
		4KB	079FFFh – 079000h	256 Bytes	07F9FFh – 07F900h
		4KB	078FFFh – 078000h	256 Bytes	07F8FFh – 07F800h
	32KB	4KB	077FFFh – 077000h	256 Bytes	07F7FFh – 07F700h
		4KB	076FFFh – 076000h	256 Bytes	07F6FFh – 07F600h
		4KB	075FFFh – 075000h	256 Bytes	07F5FFh – 07F500h
		4KB	074FFFh – 074000h	256 Bytes	07F4FFh – 07F400h
		4KB	073FFFh – 073000h	256 Bytes	07F3FFh – 07F300h
		4KB	072FFFh – 072000h	256 Bytes	07F2FFh – 07F200h
		4KB	071FFFh – 071000h	256 Bytes	07F1FFh – 07F100h
		4KB	070FFFh – 070000h	256 Bytes	07F0FFh – 07F000h
64KB Sector 6	32KB	4KB	06FFFFh – 06F000h	256 Bytes	07EFFFh – 07EF00h
		4KB	06EFFFh – 06E000h	256 Bytes	07EEFFh – 07EE00h
		4KB	06DFFFh – 06D000h	256 Bytes	07EDFFh – 07ED00h
		4KB	06CFFFh – 06C000h	256 Bytes	07ECFFh – 07EC00h
		4KB	06BFFFh – 06B000h	256 Bytes	07EBFFh – 07EB00h
		4KB	06AFFFh – 06A000h	256 Bytes	07EAFFh – 07EA00h
		4KB	069FFFh – 069000h	256 Bytes	07E9FFh – 07E900h
		4KB	068FFFh – 068000h	256 Bytes	07E8FFh – 07E800h
	32KB	4KB	067FFFh – 067000h	⋮	
		4KB	066FFFh – 066000h		
		4KB	065FFFh – 065000h		
		4KB	064FFFh – 064000h	256 Bytes	0017FFh – 001700h
		4KB	063FFFh – 063000h	256 Bytes	0016FFh – 001600h
		4KB	062FFFh – 062000h	256 Bytes	0015FFh – 001500h
		4KB	061FFFh – 061000h	256 Bytes	0014FFh – 001400h
		4KB	060FFFh – 060000h	256 Bytes	0013FFh – 001300h
⋮	⋮	⋮		256 Bytes	0012FFh – 001200h
				256 Bytes	0011FFh – 001100h
				256 Bytes	0010FFh – 001000h
64KB Sector 0	32KB	4KB	00FFFFh – 00F000h	256 Bytes	000FFFh – 000F00h
		4KB	00EFFFh – 00E000h	256 Bytes	000EFFh – 000E00h
		4KB	00DFFFh – 00D000h	256 Bytes	000DFFh – 000D00h
		4KB	00CFFFh – 00C000h	256 Bytes	000CFFh – 000C00h
		4KB	00BFFFh – 00B000h	256 Bytes	000BFFh – 000B00h
		4KB	00AFFFh – 00A000h	256 Bytes	000AFFh – 000A00h
		4KB	009FFFh – 009000h	256 Bytes	0009FFh – 000900h
		4KB	008FFFh – 008000h	256 Bytes	0008FFh – 000800h
	32KB	4KB	007FFFh – 007000h	256 Bytes	0007FFh – 000700h
		4KB	006FFFh – 006000h	256 Bytes	0006FFh – 000600h
		4KB	005FFFh – 005000h	256 Bytes	0005FFh – 000500h
		4KB	004FFFh – 004000h	256 Bytes	0004FFh – 000400h
		4KB	003FFFh – 003000h	256 Bytes	0003FFh – 000300h
		4KB	002FFFh – 002000h	256 Bytes	0002FFh – 000200h
		4KB	001FFFh – 001000h	256 Bytes	0001FFh – 000100h
		4KB	000FFFh – 000000h	256 Bytes	0000FFh – 000000h

Downloaded from Arrow.com.

4. Device Operation

The AT25SF041 is controlled by a set of instructions that are sent from a host controller, commonly referred to as the SPI Master. The SPI Master communicates with the AT25SF041 via the SPI bus which is comprised of four signal lines: Chip Select ($\overline{CS}$), Serial Clock (SCK), Serial Input (SI), and Serial Output (SO).

The SPI protocol defines a total of four modes of operation (mode 0, 1, 2, or 3) with each mode differing in respect to the SCK polarity and phase and how the polarity and phase control the flow of data on the SPI bus. The AT25SF041 supports the two most common modes, SPI Modes 0 and 3. The only difference between SPI Modes 0 and 3 is the polarity of the SCK signal when in the inactive state (when the SPI Master is in standby mode and not transferring any data). With SPI Modes 0 and 3, data is always latched in on the rising edge of SCK and always output on the falling edge of SCK.

Figure 4-1. SPI Mode 0 and 3

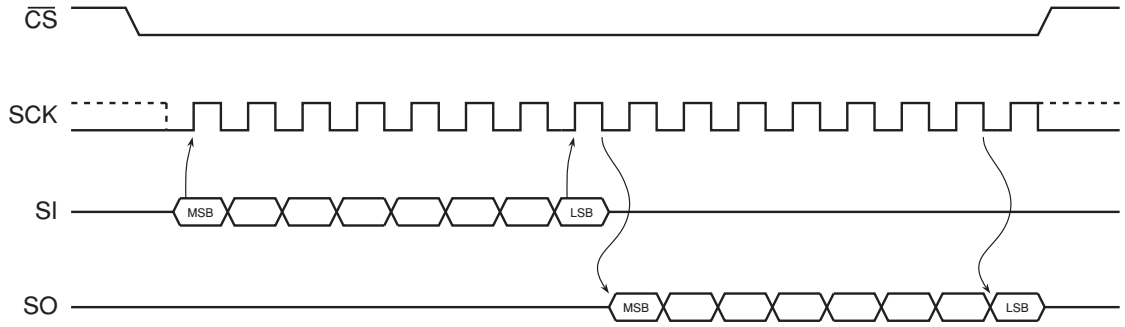

4.1 Dual Output Read

The AT25SF041 features a Dual-Output Read mode that allow two bits of data to be clocked out of the device every clock cycle to improve throughput. To accomplish this, both the SI and SO pins are utilized as outputs for the transfer of data bytes. With the Dual-Output Read Array command, the SI pin becomes an output along with the SO pin.

4.2 Quad Output Read

The AT25SF041 features a Quad-Output Read mode that allow four bits of data to be clocked out of the device every clock cycle to improve throughput. To accomplish this, the SI, SO, $\overline{WP}$, $\overline{HOLD}$ pins are utilized as outputs for the transfer of data bytes. With the Quad-Output Read Array command, the SI, $\overline{WP}$, $\overline{HOLD}$ pins become outputs along with the SO pin.

5. Commands and Addressing

A valid instruction or operation must always be started by first asserting the $\overline{CS}$ pin. After the $\overline{CS}$ pin has been asserted, the host controller must then clock out a valid 8-bit opcode on the SPI bus. Following the opcode, instruction dependent information such as address and data bytes would then be clocked out by the host controller. All opcode, address, and data bytes are transferred with the most-significant bit (MSB) first. An operation is ended by deasserting the $\overline{CS}$ pin.

Opcodes not supported by the AT25SF041 will be ignored by the device and no operation will be started. The device will continue to ignore any data presented on the SI pin until the start of the next operation ($\overline{CS}$ pin being deasserted and then reasserted). In addition, if the $\overline{CS}$ pin is deasserted before complete opcode and address information is sent to the device, then no operation will be performed and the device will simply return to the idle state and wait for the next operation.

Addressing of the device requires a total of three bytes of information to be sent, representing address bits A23-A0. Since the upper address limit of the AT25SF041 memory array is 07FFFFh, address bits A23-A19 are always ignored by the device.

Downloaded from Arrow.com.

Table 5-1. Command Listing

Command	Opcode		Clock Frequency	Address Bytes	Dummy Bytes	Data Bytes	Section Link
Read Commands							
Read Array	0Bh	0000 1011	Up to 85 MHz	3	1	1+	6.1
	03h	0000 0011	Up to 50 MHz	3	0	1+	
Dual Output Read	3Bh	0011 1011	Up to 85 MHz	3	1	1+	6.2
Dual I/O Read	BBh	1011 1011	Up to 85 MHz	3	0	1+	6.3
Quad Output Read	6Bh	0110 1011	Up to 85 MHz	3	1	1+	6.4
Quad I/O Read	EBh	1110 1011	Up to 85 MHz	3	1	1+	6.5
Continuous Read Mode Reset - Dual	FFFFh	1111 1111 1111 1111	Up to 104 MHz	0	0	0	6.6
Continuous Read Mode Reset - Quad	FFh	1111 1111	Up to 104 MHz	0	0	0	6.6
Program and Erase Commands							
Block Erase (4 Kbytes)	20h	0010 0000	Up to 104 MHz	3	0	0	7.2
Block Erase (32 Kbytes)	52h	0101 0010	Up to 104 MHz	3	0	0	
Block Erase (64 Kbytes)	D8h	1101 1000	Up to 104MHz	3	0	0	
Chip Erase	60h	0110 0000	Up to 104 MHz	0	0	0	7.3
	C7h	1100 0111	Up to 104 MHz	0	0	0	
Byte/Page Program (1 to 256 Bytes)	02h	0000 0010	Up to 104 MHz	3	0	1+	7.1
Protection Commands							
Write Enable	06h	0000 0110	Up to 104 MHz	0	0	0	8.1
Write Disable	04h	0000 0100	Up to 104 MHz	0	0	0	8.2
Security Commands							
Erase Security Register Page	44h	0100 0100	Up to 104 MHz	3	0	0	9.1
Program Security Register Page	42h	0100 0010	Up to 104 MHz	3	0	1+	9.2
Read Security Register Page	48h	0100 1000	Up to 85MHz	3	1	1+	9.3
Status Register Commands							
Read Status Register Byte 1	05h	0000 0101	Up to 104 MHz	0	0	1	10.1
Read Status Register Byte 2	35h	0011 0101	Up to 104 MHz	0	0	1	
Write Status Register	01h	0000 0001	Up to 104 MHz	0	0	1 or 2	10.2
Write Enable for Volatile Status Register	50h	0101 0000	Up to 104MHz	0	0	0	10.3
Miscellaneous Commands							
Read Manufacturer and Device ID	9Fh	1001 1111	Up to 104MHz	0	0	3	11.1

Downloaded from Arrow.com.

Table 5-1. Command Listing

Command	Opcode		Clock Frequency	Address Bytes	Dummy Bytes	Data Bytes	Section Link
Read ID	90h	1001 0000	Up to 104 MHz	0	3	2	11.2
Deep Power-Down	B9h	1011 1001	Up to 104 MHz	0	0	0	11.3
Resume from Deep Power-Down	ABh	1010 1011	Up to 104 MHz	0	0	0	11.4
Resume from Deep Power-Down and Read ID	ABh	1010 1011	Up to 104 MHz	0	3	1	11.4

6. Read Commands

6.1 Read Array (0Bh and 03h)

The Read Array command can be used to sequentially read a continuous stream of data from the device by simply providing the clock signal once the initial starting address is specified. The device incorporates an internal address counter that automatically increments every clock cycle.

Two opcodes (0Bh and 03h) can be used for the Read Array command. The use of each opcode depends on the maximum clock frequency that will be used to read data from the device. The 0Bh opcode can be used at any clock frequency up to the maximum specified by f_{RDHF}, and the 03h opcode can be used for lower frequency read operations up to the maximum specified by f_{RDLF}.

To perform the Read Array operation, the $\overline{CS}$ pin must first be asserted and the appropriate opcode (0Bh or 03h) must be clocked into the device. After the opcode has been clocked in, the three address bytes must be clocked in to specify the starting address location of the first byte to read within the memory array. Following the three address bytes, an additional dummy byte needs to be clocked into the device if the 0Bh opcode is used for the Read Array operation.

After the three address bytes (and the dummy byte if using opcode 0Bh) have been clocked in, additional clock cycles will result in data being output on the SO pin. The data is always output with the MSB of a byte first. When the last byte (07FFFFh) of the memory array has been read, the device will continue reading back at the beginning of the array (000000h). No delays will be incurred when wrapping around from the end of the array to the beginning of the array.

Deasserting the $\overline{CS}$ pin will terminate the read operation and put the SO pin into high-impedance state. The $\overline{CS}$ pin can be deasserted at any time and does not require a full byte of data be read.

Figure 6-1. Read Array - 03h Opcode

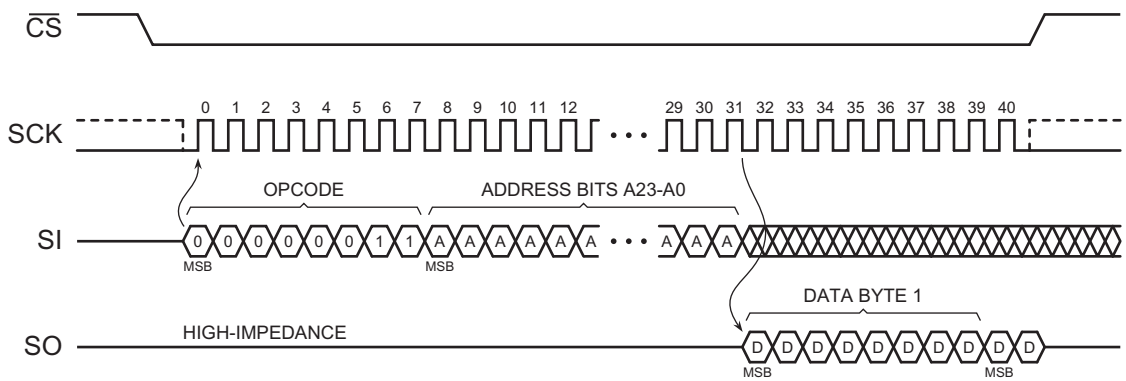

Downloaded from Arrow.com.

Figure 6-2. Read Array - 0Bh Opcode

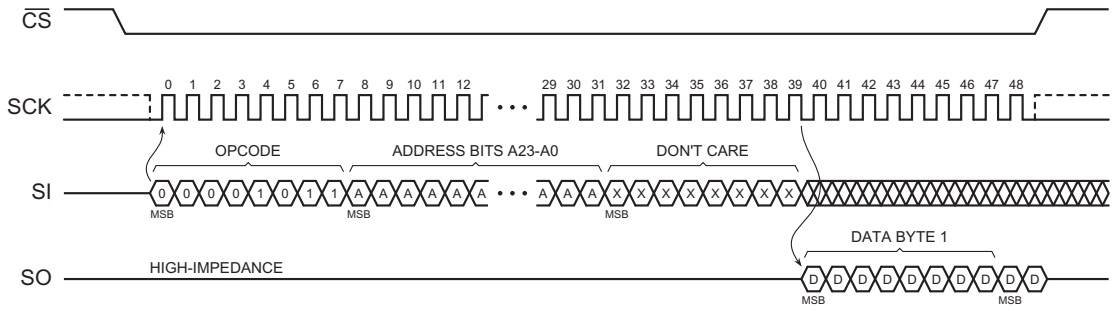

6.2 Dual-Output Read Array (3Bh)

The Dual-Output Read Array command is similar to the standard Read Array command and can be used to sequentially read a continuous stream of data from the device by simply providing the clock signal once the initial starting address has been specified. Unlike the standard Read Array command, however, the Dual-Output Read Array command allows two bits of data to be clocked out of the device on every clock cycle, rather than just one.

The Dual-Output Read Array command can be used at any clock frequency, up to the maximum specified by f_{RDDO}. To perform the Dual-Output Read Array operation, the $\overline{CS}$ pin must first be asserted and then the opcode 3Bh must be clocked into the device. After the opcode has been clocked in, the three address bytes must be clocked in to specify the location of the first byte to read within the memory array. Following the three address bytes, a single dummy byte must also be clocked into the device.

After the three address bytes and the dummy byte have been clocked in, additional clock cycles will result in data being output on both the SO and SI pins. The data is always output with the MSB of a byte first and the MSB is always output on the SO pin. During the first clock cycle, bit seven of the first data byte is output on the SO pin, while bit six of the same data byte is output on the SI pin. During the next clock cycle, bits five and four of the first data byte are output on the SO and SI pins, respectively. The sequence continues with each byte of data being output after every four clock cycles. When the last byte (07FFFFh) of the memory array has been read, the device will continue reading from the beginning of the array (000000h). No delays will be incurred when wrapping around from the end of the array to the beginning of the array.Deasserting the $\overline{CS}$ pin will terminate the read operation and put the SO and SI pins into a high-impedance state. The $\overline{CS}$ pin can be deasserted at any time and does not require that a full byte of data be read.

Figure 6-3. Dual-Output Read Array

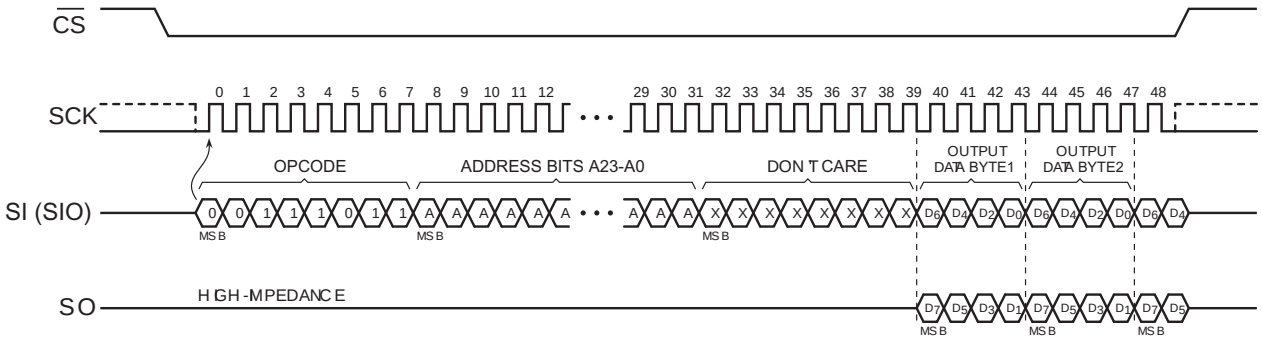

Downloaded from Arrow.com.

6.3 Dual-I/O Read Array (BBh)

The Dual-I/O Read Array command is similar to the Dual-Output Read Array command and can be used to sequentially read a continuous stream of data from the device by simply providing the clock signal once the initial starting address with two bits of address on each clock and two bits of data on every clock cycle.

The Dual-I/O Read Array command can be used at any clock frequency, up to the maximum specified by f_{RDDO}. To perform the Dual-I/O Read Array operation, the $\overline{CS}$ pin must first be asserted and then the opcode BBh must be clocked into the device. After the opcode has been clocked in, the three address bytes must be clocked in to specify the location of the first byte to read within the memory array. Following the three address bytes, a single mode byte must also be clocked into the device.

After the three address bytes and the mode byte have been clocked in, additional clock cycles will result in data being output on both the SO and SI pins. The data is always output with the MSB of a byte first and the MSB is always output on the SO pin. During the first clock cycle, bit seven of the first data byte is output on the SO pin, while bit six of the same data byte is output on the SI pin. During the next clock cycle, bits five and four of the first data byte are output on the SO and SI pins, respectively. The sequence continues with each byte of data being output after every four clock cycles. When the last byte (07FFFFh) of the memory array has been read, the device will continue reading from the beginning of the array (000000h). No delays will be incurred when wrapping around from the end of the array to the beginning of the array.Deasserting the $\overline{CS}$ pin will terminate the read operation and put the SO and SI pins into a high-impedance state. The $\overline{CS}$ pin can be deasserted at any time and does not require that a full byte of data be read.

Figure 6-4. Dual I/O Read Array (Initial command or previous M5, M4≠1,0)

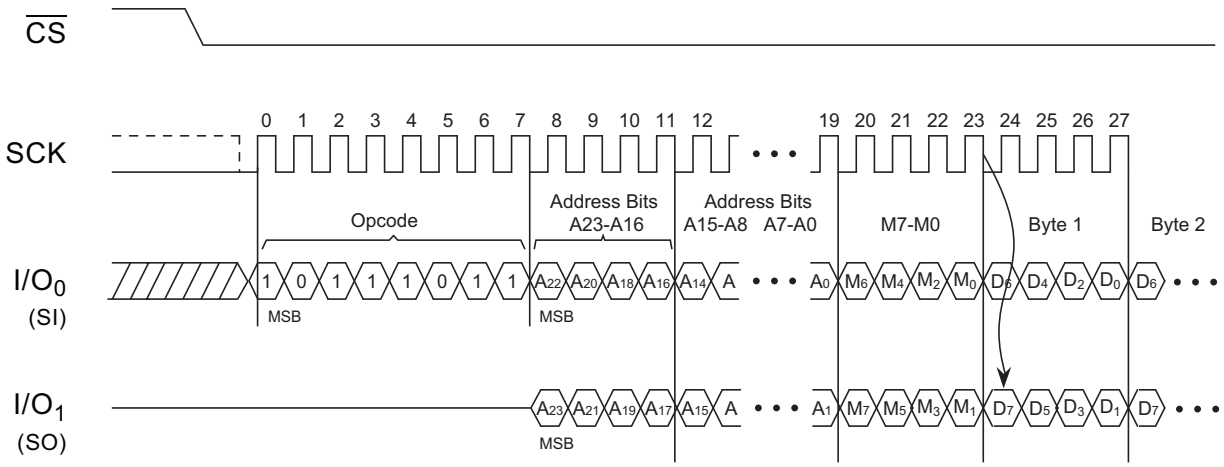

6.3.1 Dual-I/O Read Array (BBh) with Continuous Read Mode

The Fast Read Dual I/O command can further reduce instruction overhead through setting the Continuous Read Mode bits (M7-0) after the input Address bits (A23-0), as shown in Figure 6-5. The upper nibble of the (M7-4) controls the length of the next Fast Read Dual I/O command through the inclusion or exclusion of the first byte instruction code. The lower nibble bits of the (M3-0) are don't care ("x"). However, the IO pins should be high-impedance prior to the falling edge of the first data out clock. If the "Continuous Read Mode" bits M5-4 = (1,0), then the next Fast Read Dual I/O command (after $\overline{CS}$ is raised and then lowered) does not require the BBH instruction code, as shown in Figure 15. This reduces the command sequence by eight clocks and allows the Read address to be immediately entered after $\overline{CS}$ is asserted low. If the "Continuous Read Mode" bits M5-4 do not equal to (1,0), the next command (after $\overline{CS}$ is raised and then lowered) requires the first byte instruction code, thus returning to normal operation. A Continuous Read Mode Reset command can also be used to reset (M7-0) before issuing normal commands.

Downloaded from Arrow.com.

Figure 6-5. Dual-I/O Read Array (Previous command set M5, M4 = 1,0)

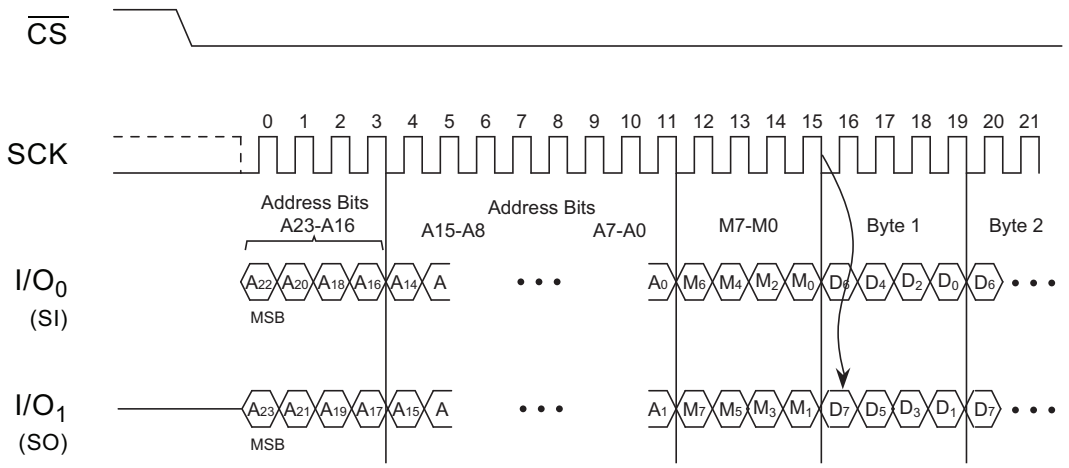

6.4 Quad-Output Read Array (6Bh)

The Quad-Output Read Array command is similar to the Dual-Output Read Array command. The Quad-Output Read Array command allows four bits of data to be clocked out of the device on every clock cycle, rather than just one or two.

The Quad Enable bit (QE) of the Status Register must be set to enable for the Quad-Output Read Array instruction.

The Quad-Output Read Array command can be used at any clock frequency, up to the maximum specified by f_{RDQO}. To perform the Quad-Output Read Array operation, the $\overline{CS}$ pin must first be asserted and then the opcode 6Bh must be clocked into the device. After the opcode has been clocked in, the three address bytes must be clocked in to specify the location of the first byte to read within the memory array. Following the three address bytes, a single dummy byte must also be clocked into the device.

After the three address bytes and the dummy byte have been clocked in, additional clock cycles will result in data being output on the I/O_{3-0} pins. The data is always output with the MSB of a byte first and the MSB is always output on the I/O_3 pin. During the first clock cycle, bit 7 of the first data byte will be output on the I/O_3 pin while bits 6, 5, and 4 of the same data byte will be output on the I/O_2, I/O_1, and I/O_0 pins, respectively. During the next clock cycle, bits 3, 2, 1, and 0 of the first data byte will be output on the I/O_3, I/O_2, I/O_1 and I/O_0 pins, respectively.

The sequence continues with each byte of data being output after every two clock cycles. When the last byte (07FFFFh) of the memory array has been read, the device will continue reading from the beginning of the array (000000h). No delays will be incurred when wrapping around from the end of the array to the beginning of the array.Deasserting the $\overline{CS}$ pin will terminate the read operation and put the $\overline{WP}$, $\overline{HOLD}$, SO, SI pins into a high-impedance state. The $\overline{CS}$ pin can be deasserted at any time and does not require that a full byte of data be read.

Downloaded from Arrow.com.

Figure 6-6. Quad-Output Read Array

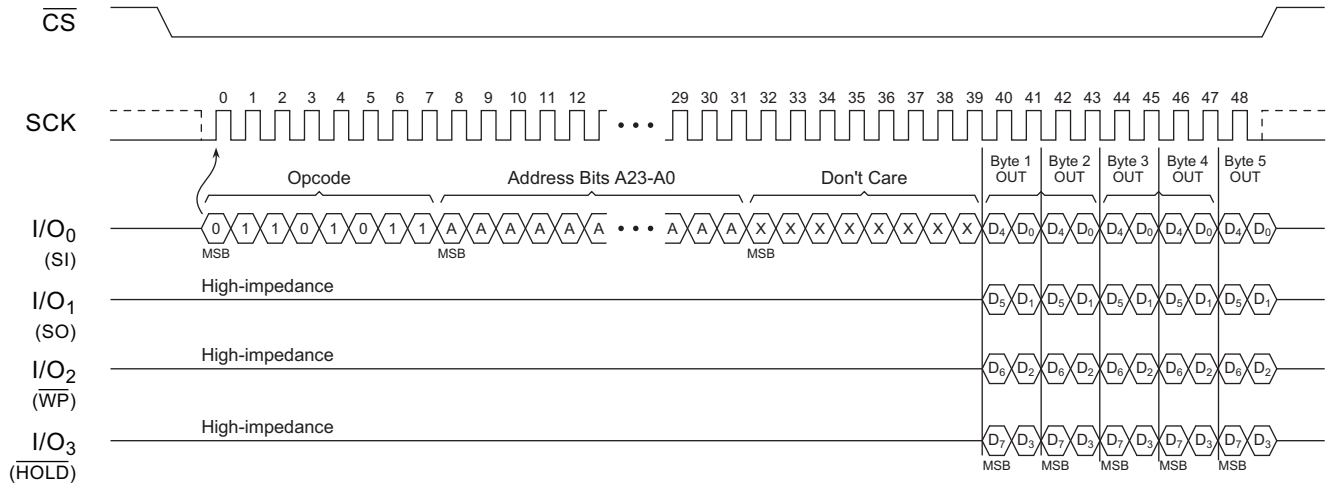

6.5 Quad-I/O Read Array(EBh)

The Quad-I/O Read Array command is similar to the Quad-Output Read Array command. The Quad-I/O Read Array command allows four bits of address to be clocked into the device on every clock cycle, rather than just one.

The Quad-I/O Read Array command can be used at any clock frequency, up to the maximum specified by f_{RDQO}. To perform the Quad-I/O Read Array operation, the $\overline{CS}$ pin must first be asserted and then the opcode EBh must be clocked into the device. After the opcode has been clocked in, the three address bytes must be clocked in to specify the location of the first byte to read within the memory array. Following the three address bytes, a single mode byte must also be clocked into the device.

After the three address bytes, the mode byte and two dummy bytes have been clocked in, additional clock cycles will result in data being output on the I/O_{3-0} pins. The data is always output with the MSB of a byte first and the MSB is always output on the I/O_3 pin. During the first clock cycle, bit 7 of the first data byte will be output on the I/O_3 pin while bits 6, 5, and 4 of the same data byte will be output on the I/O_2, I/O_1 and I/O_0 pins, respectively. During the next clock cycle, bits 3, 2, 1, and 0 of the first data byte will be output on the I/O_3, I/O_2, I/O_1 and I/O_0 pins, respectively. The sequence continues with each byte of data being output after every two clock cycles.

When the last byte (07FFFFh) of the memory array has been read, the device will continue reading from the beginning of the array (000000h). No delays will be incurred when wrapping around from the end of the array to the beginning of the array.Deasserting the $\overline{CS}$ pin will terminate the read operation and put the I/O_3, I/O_2, I/O_1 and I/O_0 pins into a high-impedance state. The $\overline{CS}$ pin can be deasserted at any time and does not require that a full byte of data be read.The Quad Enable bit (QE) of the Status Register must be set to enable for the Quad-I/O Read Array instruction.

Downloaded from Arrow.com.

Figure 6-7. Quad-I/O Read Array (Initial command or previous M5, M4 ≠ 1,0)

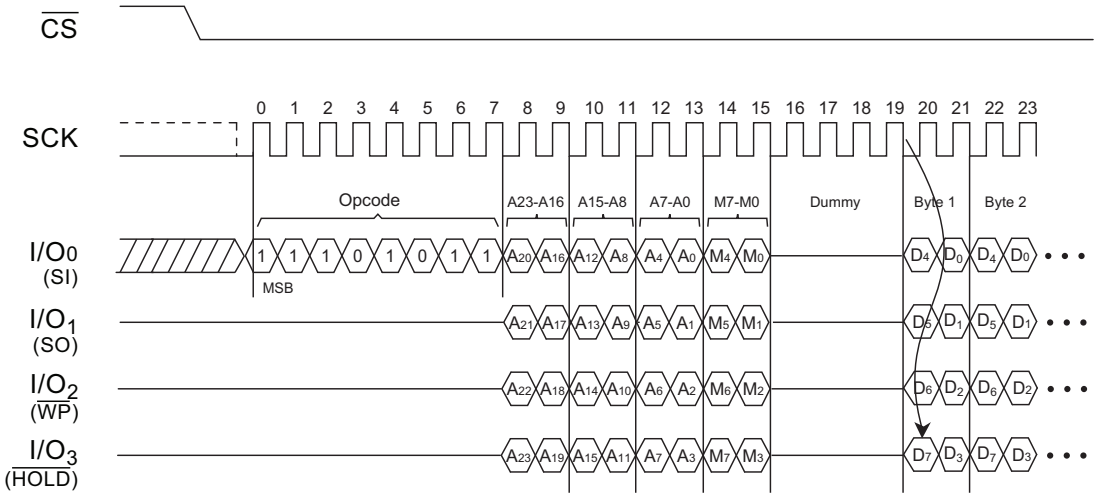

6.5.1 Quad-I/O Read Array (EBh) with Continuous Read Mode

The Fast Read Quad I/O command can further reduce instruction overhead through setting the Continuous Read Mode bits (M7-0) after the input Address bits (A23-0), as shown in Figure 6-6. The upper nibble (M7-4) of the Continuous Read Mode bits controls the length of the next Fast Read Quad I/O command through the inclusion or exclusion of the first byte instruction code. The lower nibble bits (M3-0) of the Continuous Read Mode bits are don't care. However, the IO pins should be high-impedance prior to the falling edge of the first data out clock. If the Continuous Read Mode bits M5-4 = (1,0), then the next Quad-I/O Read Array command (after $\overline{CS}$ is raised and then lowered) does not require the EBh instruction code, as shown in Fig 6-8. This reduces the command sequence by eight clocks and allows the Read address to be immediately entered after $\overline{CS}$ is asserted low. If the "Continuous Read Mode" bits M5-4 do not equal to (1,0), the next command (after $\overline{CS}$ is raised and then lowered) requires the first byte instruction code, thus returning to normal operation. A Continuous Read Mode Reset command can also be used to reset (M7-0) before issuing normal commands.

Figure 6-8. Quad I/O Read Array with Continuous Read Mode (Previous Command Set M5-4 =1,0)

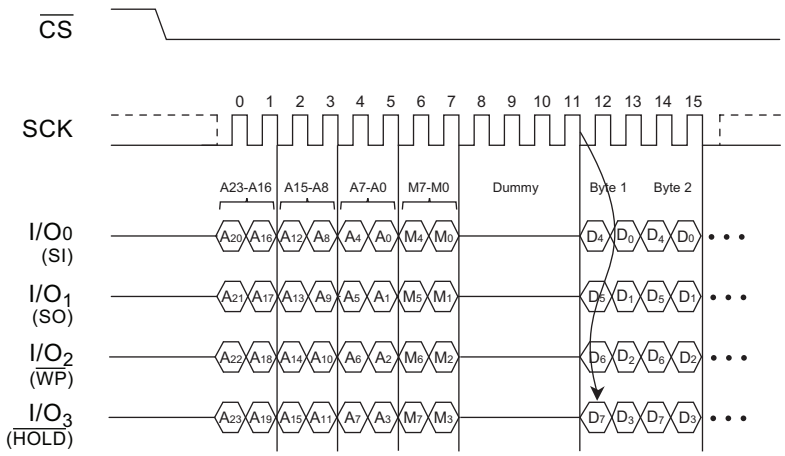

6.6 Continuous Read Mode Reset (FFh or FFFFh)

The Continuous Read Mode bits are used in conjunction with the Dual I/O Read Array and the Quad I/O Read Array commands to provide the highest random Flash memory access rate with minimum SPI instruction overhead, thus allowing more efficient XIP (execute in place) with this device family.

Downloaded from Arrow.com.

The "Continuous Read Mode" bits M7-0 are set by the Dual/Quad I/O Read Array commands. M5-4 are used to control whether the 8-bit SPI instruction code (BBh or EBh) is needed or not for the next instruction. When M5-4 = (1,0), the next instruction will be treated the same as the current Dual/Quad I/O Read Array command without needing the 8-bit instruction code. When M5-4 do not equal (1,0), the device returns to normal SPI instruction mode, in which all instructions can be accepted. M7-6 and M3-0 are reserved bits for future use; either 0 or 1 values can be used.

See Figure 6-9, the Continuous Read Mode Reset instruction (FFh or FFFFh) can be used to set M4 = 1, thus the device will release the Continuous Read Mode and return to normal SPI operation.

To reset Continuous Read Mode during Quad I/O operation, only eight clocks are needed to shift in instruction FFh. To reset Continuous Read Mode during Dual I/O operation, sixteen clocks are needed to shift in instruction FFFFh.

Figure 6-9. Continuous Read Mode Reset (Quad)

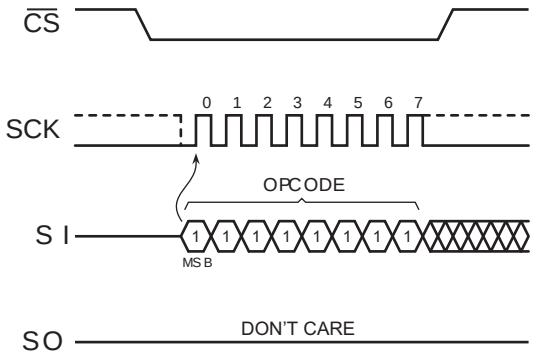

Figure 6-10. Continuous Read Mode Reset (Dual)

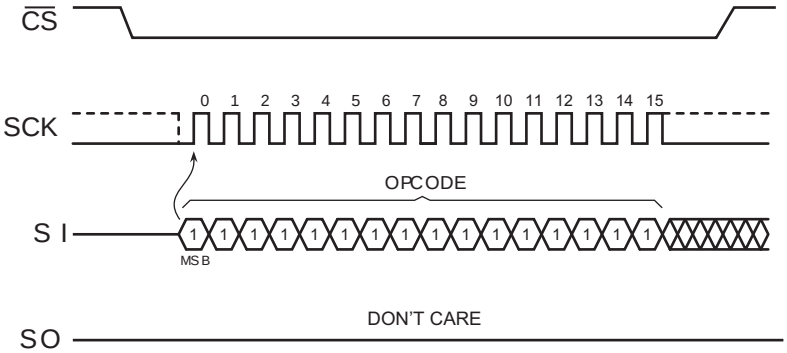

7. Program and Erase Commands

7.1 Byte/Page Program (02h)

The Byte/Page Program command allows anywhere from a single byte of data to 256 bytes of data to be programmed into previously erased memory locations. An erased memory location is one that has all eight bits set to the logical “1” state (a byte value of FFh). Before a Byte/Page Program command can be started, the Write Enable command must have been previously issued to the device (see “Write Enable (06h)” on page 17) to set the Write Enable Latch (WEL) bit of the Status Register to a logical “1” state.

To perform a Byte/Page Program command, an opcode of 02h must be clocked into the device followed by the three address bytes denoting the first byte location of the memory array to begin programming at. After the address bytes have been clocked in, data can then be clocked into the device and will be stored in an internal buffer.

If the starting memory address denoted by A23-A0 does not fall on an even 256-byte page boundary (A7-A0 are not all 0), then special circumstances regarding which memory locations to be programmed will apply. In this situation, any data

Downloaded from Arrow.com.

that is sent to the device that goes beyond the end of the page will wrap around back to the beginning of the same page. For example, if the starting address denoted by A23-A0 is 0000FEh, and three bytes of data are sent to the device, then the first two bytes of data will be programmed at addresses 0000FEh and 0000FFh while the last byte of data will be programmed at address 000000h. The remaining bytes in the page (addresses 000001h through 0000FDh) will not be programmed and will remain in the erased state (FFh). In addition, if more than 256 bytes of data are sent to the device, then only the last 256 bytes sent will be latched into the internal buffer.

When the $\overline{CS}$ pin is deasserted, the device will take the data stored in the internal buffer and program it into the appropriate memory array locations based on the starting address specified by A23-A0 and the number of data bytes sent to the device. If less than 256 bytes of data were sent to the device, then the remaining bytes within the page will not be programmed and will remain in the erased state (FFh). The programming of the data bytes is internally self-timed and should take place in a time of t_{PP} or t_{BP} if only programming a single byte.

The three address bytes and at least one complete byte of data must be clocked into the device before the $\overline{CS}$ pin is deasserted, and the $\overline{CS}$ pin must be deasserted on even byte boundaries (multiples of eight bits); otherwise, the device will abort the operation and no data will be programmed into the memory array. In addition, if the memory is in the protected state (see "Non-Volatile Protection" on page 18), then the Byte/Page Program command will not be executed, and the device will return to the idle state once the $\overline{CS}$ pin has been deasserted. The WEL bit in the Status Register will be reset back to the logical "0" state if the program cycle aborts due to an incomplete address being sent, an incomplete byte of data being sent, the $\overline{CS}$ pin being deasserted on uneven byte boundaries, or because the memory location to be programmed is protected.

While the device is programming, the Status Register can be read and will indicate that the device is busy. For faster throughput, it is recommended that the Status Register be polled rather than waiting the t_{BP} or t_{PP} time to determine if the data bytes have finished programming. At some point before the program cycle completes, the WEL bit in the Status Register will be reset back to the logical "0" state.

Figure 7-1. Byte Program

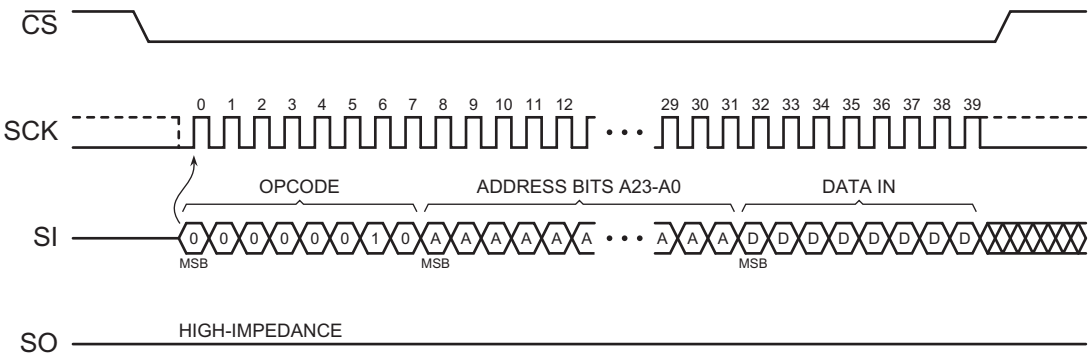

Figure 7-2. Page Program

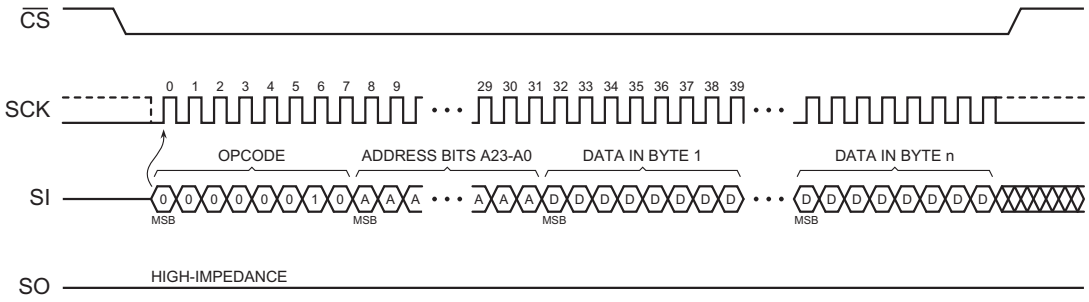

Downloaded from Arrow.com.

7.2 Block Erase (20h, 52h, or D8h)

A block of 4, 32, or 64 Kbytes can be erased (all bits set to the logical “1” state) in a single operation by using one of three different opcodes for the Block Erase command. An opcode of 20h is used for a 4-Kbyte erase, an opcode of 52h is used for a 32-Kbyte erase, or D8h is used for a 64-Kbyte erase. Before a Block Erase command can be started, the Write Enable command must have been previously issued to the device to set the WEL bit of the Status Register to a logical “1” state.

To perform a Block Erase, the $\overline{CS}$ pin must first be asserted and the appropriate opcode (20h, 52h, or D8h) must be clocked into the device. After the opcode has been clocked in, the three address bytes specifying an address within the 4- or 32- or 64-Kbyte block to be erased must be clocked in. Any additional data clocked into the device will be ignored. When the $\overline{CS}$ pin is deasserted, the device will erase the appropriate block. The erasing of the block is internally self-timed and should take place in a time of t_{BLKE}.

Since the Block Erase command erases a region of bytes, the lower order address bits do not need to be decoded by the device. Therefore, for a 4-Kbyte erase, address bits A11-A0 will be ignored by the device and their values can be either a logical “1” or “0”. For a 32-Kbyte erase, address bits A14-A0 will be ignored by the device. For a 64-Kbyte erase, address bits A15-A0 will be ignored by the device. Despite the lower order address bits not being decoded by the device, the complete three address bytes must still be clocked into the device before the $\overline{CS}$ pin is deasserted, and the $\overline{CS}$ pin must be deasserted on an byte boundary (multiples of eight bits); otherwise, the device will abort the operation and no erase operation will be performed.

If the memory is in the protected state, then the Block Erase command will not be executed, and the device will return to the idle state once the $\overline{CS}$ pin has been deasserted.

The WEL bit in the Status Register will be reset back to the logical “0” state if the erase cycle aborts due to an incomplete address being sent, the $\overline{CS}$ pin being deasserted on uneven byte boundaries, or because a memory location within the region to be erased is protected.

While the device is executing a successful erase cycle, the Status Register can be read and will indicate that the device is busy. For faster throughput, it is recommended that the Status Register be polled rather than waiting the t_{BLKE} time to determine if the device has finished erasing. At some point before the erase cycle completes, the WEL bit in the Status Register will be reset back to the logical “0” state.

Figure 7-3. Block Erase

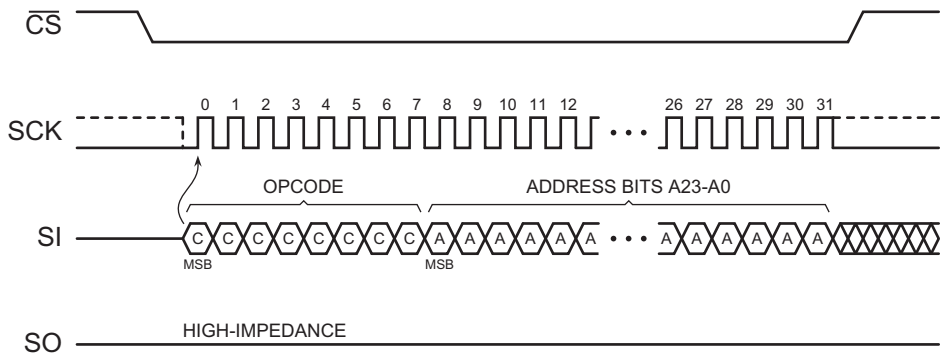

7.3 Chip Erase (60h or C7h)

The entire memory array can be erased in a single operation by using the Chip Erase command. Before a Chip Erase command can be started, the Write Enable command must have been previously issued to the device to set the WEL bit of the Status Register to a logical “1” state.

Two opcodes (60h and C7h) can be used for the Chip Erase command. There is no difference in device functionality when utilizing the two opcodes, so they can be used interchangeably. To perform a Chip Erase, one of the two opcodes must be clocked into the device. Since the entire memory array is to be erased, no address bytes need to be clocked into

Downloaded from Arrow.com.

the device, and any data clocked in after the opcode will be ignored. When the $\overline{CS}$ pin is deasserted, the device will erase the entire memory array. The erasing of the device is internally self-timed and should take place in a time of t_{CHPE}.

The complete opcode must be clocked into the device before the $\overline{CS}$ pin is deasserted, and the $\overline{CS}$ pin must be deasserted on an byte boundary (multiples of eight bits); otherwise, no erase will be performed. In addition, if the memory array is in the protected state, then the Chip Erase command will not be executed, and the device will return to the idle state once the $\overline{CS}$ pin has been deasserted. The WEL bit in the Status Register will be reset back to the logical “0” state if the $\overline{CS}$ pin is deasserted on uneven byte boundaries or if the memory is in the protected state.

While the device is executing a successful erase cycle, the Status Register can be read and will indicate that the device is busy. For faster throughput, it is recommended that the Status Register be polled rather than waiting the t_{CHPE} time to determine if the device has finished erasing. At some point before the erase cycle completes, the WEL bit in the Status Register will be reset back to the logical “0” state.

Figure 7-4. Chip Erase

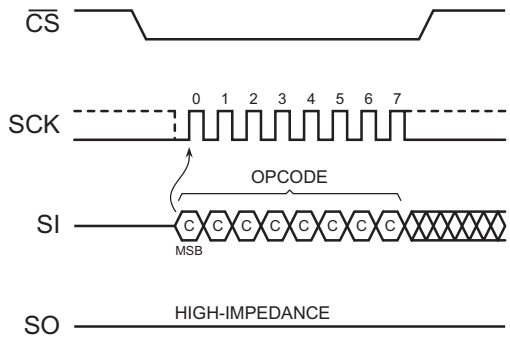

8. Protection Commands and Features

8.1 Write Enable (06h)

The Write Enable command is used to set the Write Enable Latch (WEL) bit in the Status Register to a logical “1” state. The WEL bit must be set before a Byte/Page Program, Erase, Program Security Register Pages, Erase Security Register Pages or Write Status Register command can be executed. This makes the issuance of these commands a two step process, thereby reducing the chances of a command being accidentally or erroneously executed. If the WEL bit in the Status Register is not set prior to the issuance of one of these commands, then the command will not be executed.

To issue the Write Enable command, the $\overline{CS}$ pin must first be asserted and the opcode of 06h must be clocked into the device. No address bytes need to be clocked into the device, and any data clocked in after the opcode will be ignored. When the $\overline{CS}$ pin is deasserted, the WEL bit in the Status Register will be set to a logical “1”. The complete opcode must be clocked into the device before the $\overline{CS}$ pin is deasserted, and the $\overline{CS}$ pin must be deasserted on an byte boundary (multiples of eight bits); otherwise, the device will abort the operation and the WEL bit state will not change.

Figure 8-1. Write Enable

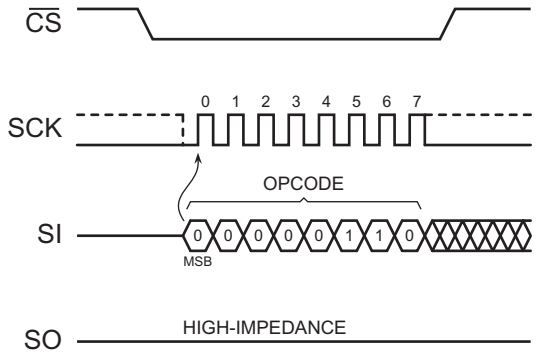

Downloaded from Arrow.com.

8.2 Write Disable (04h)

The Write Disable command is used to reset the Write Enable Latch (WEL) bit in the Status Register to the logical “0” state. With the WEL bit reset, all Byte/Page Program, Erase, Program Security Register Page, and Write Status Register commands will not be executed. Other conditions can also cause the WEL bit to be reset; for more details, refer to the WEL bit section of the Status Register description.

To issue the Write Disable command, the $\overline{CS}$ pin must first be asserted and the opcode of 04h must be clocked into the device. No address bytes need to be clocked into the device, and any data clocked in after the opcode will be ignored. When the $\overline{CS}$ pin is deasserted, the WEL bit in the Status Register will be reset to a logical “0”. The complete opcode must be clocked into the device before the $\overline{CS}$ pin is deasserted, and the $\overline{CS}$ pin must be deasserted on an byte boundary (multiples of eight bits); otherwise, the device will abort the operation and the WEL bit state will not change.

Figure 8-2. Write Disable

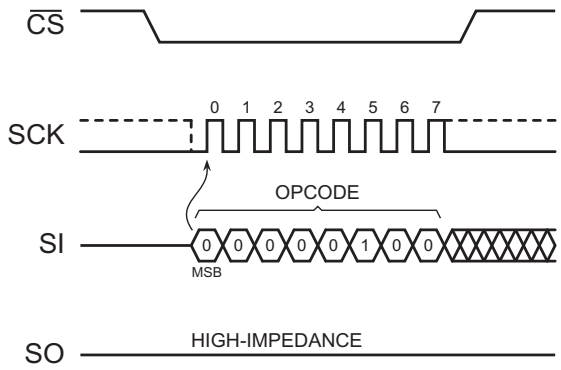

8.3 Non-Volatile Protection

The device can be software protected against erroneous or malicious program or erase operations by utilizing the Non-Volatile Protection feature of the device. Non-Volatile Protection can be enabled or disabled by using the Write Status Register command to change the value of the Protection (CMP, SEC, TB, BP2, BP1, BP0) bits in the Status Register. The following table outlines the states of the Protection bits and the associated protection area.

Table 8-1. Memory Array with CMP=0

Protection Bits					Memory Content	
SEC	TB	BP2	BP1	BP0	Address Range	Portion
X	X	0	0	0	None	None
0	0	0	0	1	070000h-07FFFFh	Upper 1/8
0	0	0	1	0	060000h-07FFFFh	Upper 1/4
0	0	0	1	1	040000h-07FFFFh	Upper 1/2
0	1	0	0	1	000000h-00FFFFh	Lower 1/8
0	1	0	1	0	000000h-01FFFFh	Lower 1/4
0	1	0	1	1	000000h-03FFFFh	Lower 1/2
0	X	1	X	X	000000h-07FFFFh	All
1	0	0	0	1	07F000h-07FFFFh	Upper 1/128
1	0	0	1	0	07E000h-07FFFFh	Upper 1/64
1	0	0	1	1	07C000h-07FFFFh	Upper 1/32

Downloaded from Arrow.com.

Table 8-1. Memory Array with CMP=0

Protection Bits					Memory Content	
1	0	1	0	X	078000h-07FFFFh	Upper 1/16
1	0	1	1	0	078000h-07FFFFh	Upper 1/16
1	1	0	0	1	000000h-000FFFh	Lower 1/128
1	1	0	1	0	000000h-001FFFh	Lower 1/64
1	1	0	1	1	000000h-003FFFh	Lower 1/32
1	1	1	0	X	000000h-007FFFh	Lower 1/16
1	1	1	1	0	000000h-007FFFh	Lower 1/16
1	X	1	1	1	000000h-07FFFFh	All

Table 8-2. Memory Array Protection with CMP=1

Protection Bits					Memory Content	
SEC	TB	BP2	BP1	BP0	Address Range	Portion
X	X	0	0	0	000000h-07FFFFh	All
0	0	0	0	1	000000h-06FFFFh	Lower 7/8
0	0	0	1	0	000000h-05FFFFh	Lower 3/4
0	0	0	1	1	000000h-03FFFFh	Lower 1/2
0	1	0	0	1	010000h-07FFFFh	Upper 7/8
0	1	0	1	0	020000h-07FFFFh	Upper 3/4
0	1	0	1	1	040000h-07FFFFh	Upper 1/2
0	X	1	X	X	None	None
1	0	0	0	1	000000h-07EFFFh	Lower 127/128
1	0	0	1	0	000000h-07DFFFh	Lower 63/64
1	0	0	1	1	000000h-07BFFFh	Lower 31/32
1	0	1	0	X	000000h-077FFFh	Lower 15/16
1	0	1	1	0	000000h-077FFFh	Lower 15/16
1	1	0	0	1	001000h-07FFFFh	Upper 127/128
1	1	0	1	0	002000h-07FFFFh	Upper 63/64
1	1	0	1	1	004000h-07FFFFh	Upper 31/32
1	1	1	0	X	008000h-07FFFFh	Upper 15/16
1	1	1	1	0	008000h-07FFFFh	Upper 15/16
1	X	1	1	1	None	None

Downloaded from Arrow.com.

As a safeguard against accidental or erroneous protecting or unprotecting of the memory array, the Protection can be locked from updates by using the $\overline{WP}$ pin (see "Protected States and the Write Protect Pin" on page 20 for more details).

8.4 Protected States and the Write Protect Pin

The $\overline{WP}$ pin is not linked to the memory array itself and has no direct effect on the protection status of the memory array. Instead, the $\overline{WP}$ pin, is used to control the hardware locking mechanism of the device.

If the $\overline{WP}$ pin is permanently connected to GND, then the protection bits cannot be changed.

9. Security Register Commands

The device contains three extra pages called Security Registers that can be used for purposes such as unique device serialization, system-level Electronic Serial Number (ESN) storage, locked key storage, etc. The Security Registers are independent of the main Flash memory.

Each page of the Security Register can be erased and programmed independently. Each page can also be independently locked to prevent further changes.

9.1 Erase Security Registers (44h)

Before an erase Security Register Page command can be started, the Write Enable command must have been previously issued to the device to set the WEL bit of the Status Register to a logical "1" state.

To perform an Erase Security Register Page command, the $\overline{CS}$ pin must first be asserted and the opcode 44h must be clocked into the device. After the opcode has been clocked in, the three address bytes specifying the Security Register Page to be erased must be clocked in. When the $\overline{CS}$ pin is deasserted, the device will erase the appropriate block. The erasing of the block is internally self-timed and should take place in a time of t_{BE}.

Since the Erase Security Register Page command erases a region of bytes, the lower order address bits do not need to be decoded by the device. Therefore address bits A7-A0 will be ignored by the device. Despite the lower order address bits not being decoded by the device, the complete three address bytes must still be clocked into the device before the $\overline{CS}$ pin is deasserted, and the $\overline{CS}$ pin must be deasserted right after the last address bit (A0); otherwise, the device will abort the operation and no erase operation will be performed.

While the device is executing a successful erase cycle, the Status Register can be read and will indicate that the device is busy. For faster throughput, it is recommended that the Status Register be polled rather than waiting the t_{BE} time to determine if the device has finished erasing. At some point before the erase cycle completes, the $\overline{RDY}$/BSY bit in the Status Register will be reset back to the logical "0" state.

The WEL bit in the Status Register will be reset back to the logical "0" state if the erase cycle aborts due to an incomplete address being sent, the $\overline{CS}$ pin being deasserted on uneven byte boundaries, or because a memory location within the region to be erased is protected.

The Security Registers Lock Bits (LB3-LB1) in the Status Register can be used to OTP protect the security registers. Once a Lock Bit is set to 1, the corresponding Security Register will be permanently locked. The Erase Security Register Page instruction will be ignored for Security Registers which have their Lock Bit set.

Table 9-1. Security Register Addresses for Program Security Registers Command

Address	A23-A16	A15-A8	A7-A0
Security Register 1	00H	01H	Byte Address
Security Register 2	00H	02H	Byte Address
Security Register 3	00H	03H	Byte Address

Downloaded from Arrow.com.

Figure 9-1. Erase Security Register Page

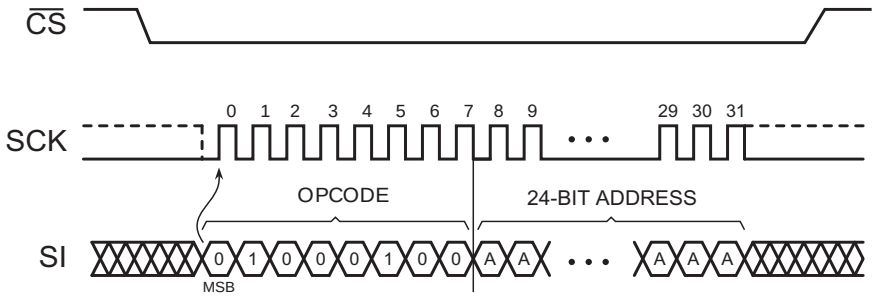

9.2 Program Security Registers (42h)

The Program Security Registers command utilizes the internal 256-byte buffer for processing. Therefore, the contents of the buffer will be altered from its previous state when this command is issued.

The Security Registers can be programmed in a similar fashion to the Program Array operation up to the maximum clock frequency specified by f_{CLK}. Before a Program Security Registers command can be started, the Write Enable command must have been previously issued to the device (see "Write Enable (06h)" on page 17) to set the Write Enable Latch (WEL) bit of the Status Register to a logical "1" state. To program the Security Registers, the $\overline{CS}$ pin must first be asserted and the opcode of 42h must be clocked into the device. After the opcode has been clocked in, the three address bytes must be clocked in to specify the starting address location of the first byte to program within the Security Register.

Figure 9-2. Program Security Registers

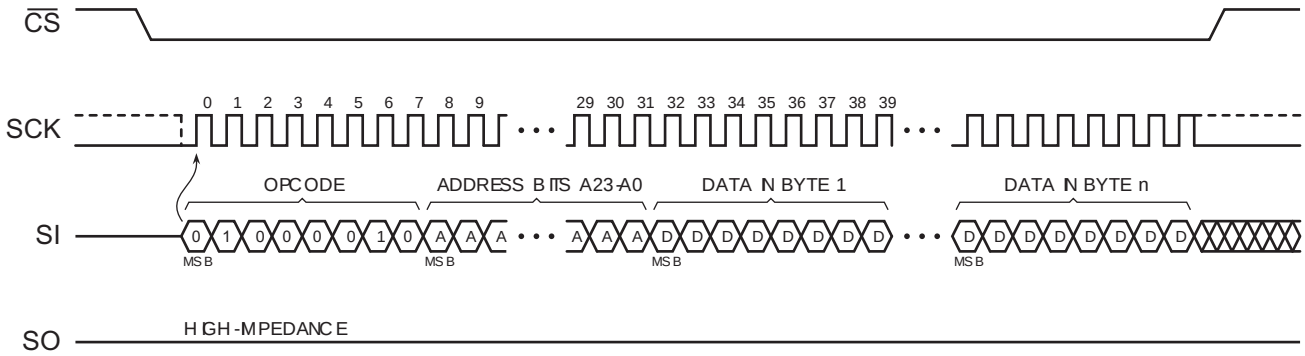

9.3 Read Security Registers (48h)

The Security Register can be sequentially read in a similar fashion to the Read Array operation up to the maximum clock frequency specified by f_{CLK}. To read the Security Register, the $\overline{CS}$ pin must first be asserted and the opcode of 48h must be clocked into the device. After the opcode has been clocked in, the three address bytes must be clocked in to specify the starting address location of the first byte to read within the Security Register. Following the three address bytes, one dummy byte must be clocked into the device before data can be output.

After the three address bytes and the dummy byte have been clocked in, additional clock cycles will result in Security Register data being output on the SO pin. When the last byte (0003FFh) of the Security Register has been read, the device will continue reading back at the beginning of the register (000000h). No delays will be incurred when wrapping around from the end of the register to the beginning of the register.

Downloaded from Arrow.com.

Deasserting the $\overline{CS}$ pin will terminate the read operation and put the SO pin into a high-impedance state. The $\overline{CS}$ pin can be deasserted at any time and does not require that a full byte of data be read.

Table 9-2. Security Register Addresses for Read Security Registers command

Address	A23-A16	A15-A8	A7-A0
Security Register 1	00H	01H	Byte Address
Security Register 2	00H	02H	Byte Address
Security Register 3	00H	03H	Byte Address

Figure 9-3. Read Security Registers

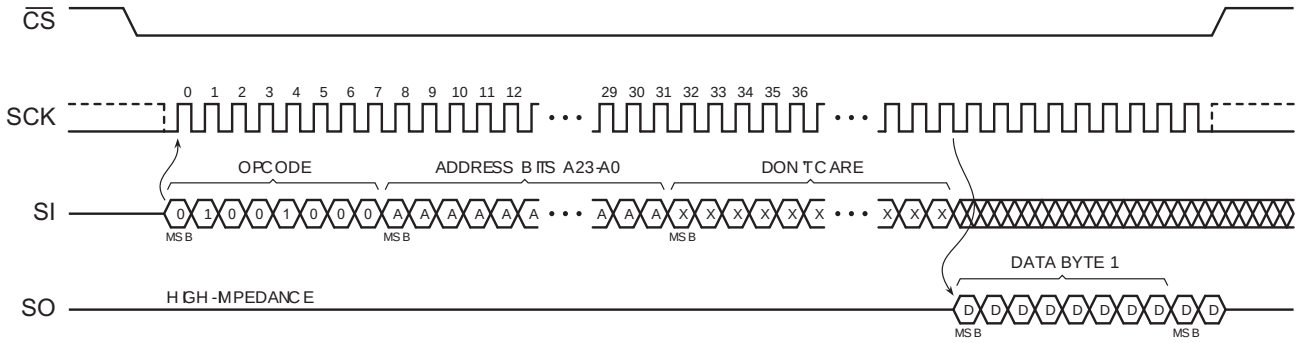

10. Status Register Commands

10.1 Read Status Register (05h and 35h)

The Status Register can be read to determine the device's ready/busy status, as well as the status of many other functions such as Block Protection. The Status Register can be read at any time, including during an internally self-timed program or erase operation.

To read Status Register Byte 1, the $\overline{CS}$ pin must first be asserted and the opcode of 05h must be clocked into the device. After the opcode has been clocked in, the device will begin outputting Status Register Byte 1 data on the SO pin during every subsequent clock cycle. After the last bit (bit 0) of Status Register Byte 1 has been clocked out, the sequence will repeat itself starting again with bit 7 as long as the $\overline{CS}$ pin remains asserted and the clock pin is being pulsed. The data in the Status Register is constantly being updated, so each repeating sequence will output new data. Deasserting the $\overline{CS}$ pin will terminate the Read Status Register operation and put the SO pin into a high-impedance state. The $\overline{CS}$ pin can be deasserted at any time and does not require that a full byte of data be read.

To read Status Register Byte 2, the $\overline{CS}$ pin must first be asserted and the opcode of 35h must be clocked into the device. After the opcode has been clocked in, the device will begin outputting Status Register Byte 2 data on the SO pin during every subsequent clock cycle. After the last bit (bit 0) of Status Register Byte 2 has been clocked out, the sequence will repeat itself starting again with bit 7 as long as the $\overline{CS}$ pin remains asserted and the clock pin is being pulsed. The data in the Status Register is constantly being updated, so each repeating sequence will output new data. Deasserting the $\overline{CS}$ pin will terminate the Read Status Register operation and put the SO pin into a high-impedance state. The $\overline{CS}$ pin can be deasserted at any time and does not require that a full byte of data be read.

Downloaded from Arrow.com.

Table 10-1. Status Register Format - Byte 1

Bit(1)	Name		Type(2)	Description	
7	SRP0	Status Register Protection bit-0	R/W		See Table **10-3** on Status Register Protection
6	SEC	Block Protection	R/W		See Table **8-1 and 8-2** on Non-Volatile Protection
5	TB	Top or Bottom Protection	R/W		See Table **8-1 and 8-2** on Non-Volatile Protection
4	BP2	Block Protection bit-2	R/W		See Table **8-1 and 8-2** on Non-Volatile Protection
3	BP1	Block Protection bit-1	R/W		See Table **8-1 and 8-2** on Non-Volatile Protection
2	BP0	Block Protection bit-0	R/W		See Table **8-1 and 8-2** on Non-Volatile Protection
1	WEL	Write Enable Latch Status	R	0	Device is not Write Enabled (default)
				1	Device is Write Enabled
0	$\overline{\text{RDY}}$/BSY	Ready/Busy Status	R	0	Device is ready
				1	Device is busy with an internal operation

Notes: 1. Only bits 7 through 2 of the Status Register can be modified when using the Write Status Register command.

2. R/W = Readable and writable
R = Readable only

Figure 10-1. Read Status Register Byte 1

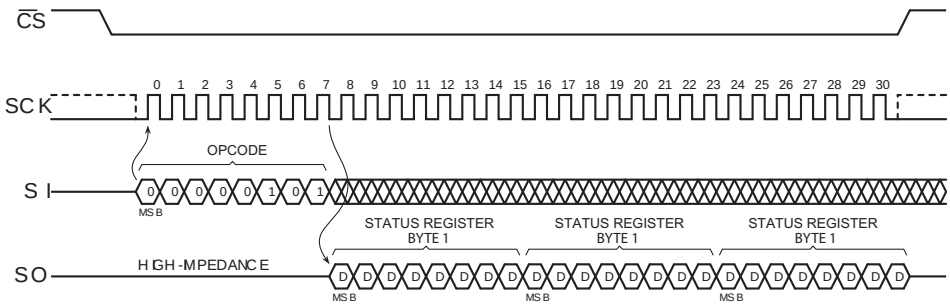

Table 10-2. Status Register Format – Byte 2

Bit(1)	Name		Type(2)	Description	
7	RES	Reserved for future use	R	0	Reserved for future use
6	CMP	Complement Block Protection	R/W	0	See table on Block Protection
5	LB3	Lock Security Register 3	R/W	0	Security Register page-3 is not locked (default)
				1	Security Register page-3 cannot be erased/programmed
4	LB2	Lock Security Register 2	R/W	0	Security Register page-2 is not locked (default)
				1	Security Register page-2 cannot be erased/programmed
3	LB1	Lock Security Register 1	R/W	0	Security Register page-1 is not locked (default)
				1	Security Register page-1 cannot be erased/programmed
2	RES	Reserved for future use	R	0	Reserved for future use
1	QE	Quad Enable	R/W	0	$\overline{\text{HOLD}}$ and $\overline{\text{WP}}$ function normally (default)
				1	$\overline{\text{HOLD}}$ and $\overline{\text{WP}}$ are I/O pins
0	SRP1	Status Register Protect bit-1	R/W		See table on Status Register Protection

Downloaded from Arrow.com.

Notes: 1. Only bits 6 through 3, 1, and 0 of the Status Register can be modified when using the Write Status Register command
2. R/W = Readable and writable
R = Readable only.

Figure 10-2. Read Status Register Byte 2

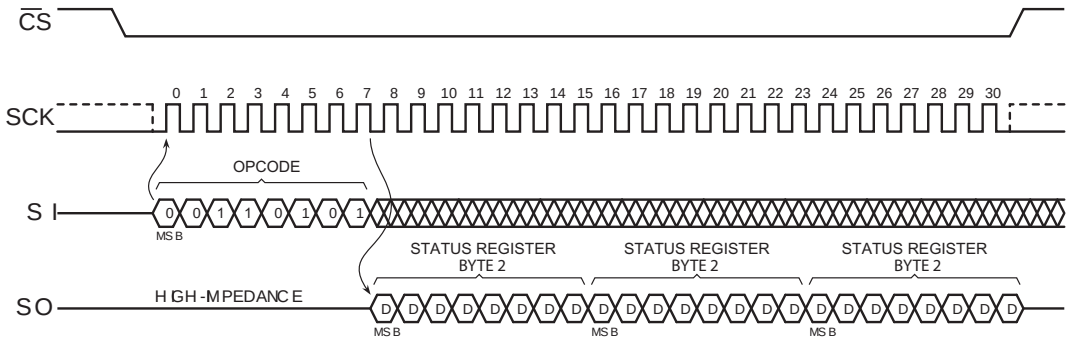

10.1.1 SRP1, SRP0 Bits

The SRP1 and SRP0 bits control whether the Status Register can be modified. The state of the $\overline{WP}$ pin along with the values of the SRP1 and SRP0 determine if the device is software protected, hardware protected, or permanently protected (see **Table 10-3**).

Table 10-3. Status Register Protection Table

SRP1	SRP0	$\overline{WP}$	Status Register	Description
0	0	X	Software Protected	The Status Register can be written to after a Write Enable instruction, WEL=1.(Factory Default)
0	1	0	Hardware Protected	$\overline{WP}$=0, the Status Register is locked and cannot be written.
0	1	1	Hardware Unprotected	$\overline{WP}$ =1, the Status Register is unlocked and can be written to after a Write Enable instruction, WEL=1.
1	0	X	Power Supply Lock-Down (1)	Status Register is protected and cannot be written to again until the next Power-Down, Power-Up cycle.
1	1	X	One Time Program	Status Register is permanently protected and cannot be written to.

1. When SRP1, SRP0 = (1, 0), a Power-Down, Power-Up cycle will change SRP1, SRP0 to the (0, 0) state.

10.1.2 CMP, SEC, TB, BP2, BP1, BP0 Bits

The CMP, SEC, TB, BP2, BP1, and BP0 bits control which portions of the array are protected from erase and program operations (see Tables 8-1 and 8-2).

The CMP bit complements the effect of the other bits.

The SEC bit selects between large and small block size protection.

The TB bit selects between top of the array or bottom of the array protection.

The BP2, BP1, and BP0 bits determine how much of the array is protected.

Downloaded from Arrow.com.

10.1.3 WEL Bit

The WEL bit indicates the current status of the internal Write Enable Latch. When the WEL bit is in the logical “0” state, the device will not accept any Byte/Page Program, erase, Program Security Register, Erase Security Register, or Write Status Register commands. The WEL bit defaults to the logical “0” state after a device power-up or reset operation. In addition, the WEL bit will be reset to the logical “0” state automatically under the following conditions:

- Write Disable operation completes successfully
- Write Status Register operation completes successfully or aborts
- Program Security Register operation completes successfully or aborts
- Erase Security Register operation completes successfully or aborts
- Byte/Page Program operation completes successfully or aborts
- Block Erase operation completes successfully or aborts
- Chip Erase operation completes successfully or aborts

If the WEL bit is in the logical “1” state, it will not be reset to a logical “0” if an operation aborts due to an incomplete or unrecognized opcode being clocked into the device before the $\overline{CS}$ pin is deasserted. In order for the WEL bit to be reset when an operation aborts prematurely, the entire opcode for a Byte/Page Program, erase, Program Security Register, Erase Security Register, or Write Status Register command must have been clocked into the device.

10.1.4 $\overline{RDY}$/BSY Bit

The $\overline{RDY}$/BSY bit is used to determine whether or not an internal operation, such as a program or erase, is in progress. To poll the $\overline{RDY}$/BSY bit to detect the completion of a program or erase cycle, new Status Register data must be continually clocked out of the device until the state of the $\overline{RDY}$/BSY bit changes from a logical “1” to a logical “0”.

10.1.5 LB3, LB2, LB1 Bits

The LB3, LB2, and LB1 bits are used to determine if any of the three Security Register pages are locked.
The LB3 bit is in the logical “1” state if Security Register page-2 is locked and cannot be erased or programmed.
The LB2 bit is in the logical “1” state if Security Register page-1 is locked and cannot be erased or programmed
The LB1 bit is in the logical “1” state if Security Register page-0 is locked and cannot be erased or programmed.

10.1.6 QE Bit

The QE bit is used to determine if the device is in the Quad Enabled mode. If the QE bit is in the logical “1” state, then the $\overline{HOLD}$ and $\overline{WP}$ pins functions as input/output pins similar to the SI and SO. If the QE bit is in the logical “0” state, then the $\overline{HOLD}$ pin functions as an input only and the $\overline{WP}$ pin functions as an input only.

10.2 Write Status Register (01h)

The Write Status Register command is used to modify the Block Protection, Security Register Lock-down, Quad Enable, and Status Register Protection. Before the Write Status Register command can be issued, the Write Enable command must have been previously issued to set the WEL bit in the Status Register to a logical “1”.

To issue the Write Status Register command, the $\overline{CS}$ pin must first be asserted and the opcode of 01h must be clocked into the device followed by one or two bytes of data. The first byte of data consists of the SRP0, SEC, TB, BP2, BP1, BP0 bit values and 2 dummy bits. The second byte is optional and consists of 1 dummy bit, the CMP, LB3, LB2, LB1, 1 dummy bit, the QE, and 1 dummy bit. When the $\overline{CS}$ pin is deasserted, the bit values in the Status Register will be modified, and the WEL bit in the Status Register will be reset back to a logical “0”.

The complete one byte or two bytes of data must be clocked into the device before the $\overline{CS}$ pin is deasserted, and the $\overline{CS}$ pin must be deasserted on even byte boundaries (multiples of eight bits); otherwise, the device will abort the operation, the state of the Status Register bits will not change, memory protection status will not change, and the WEL bit in the Status Register will be reset back to the logical “0” state

Downloaded from Arrow.com.

Table 10-4. Write Status Register Format.

Bit 7	Bit 6	Bit 5	Bit 4	Bit 3	Bit 2	Bit 1	Bit 0
SRP0	SEC	TB	BP2	BP1	BP0	WEL	$\overline{\text{RDY}}$/BSY

Figure 10-3. Write Status Register

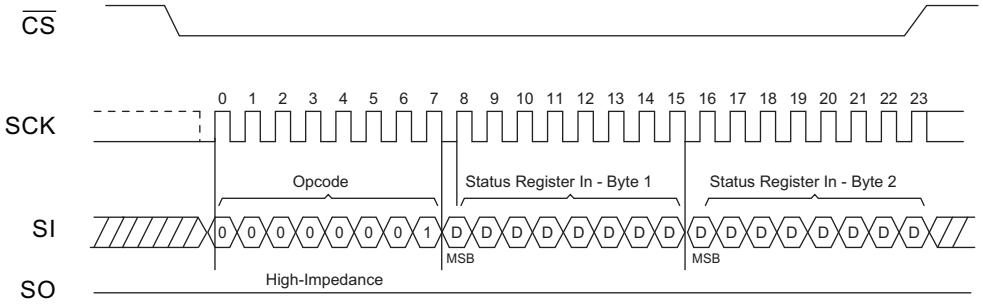

Table 10-5. Write Status Register Byte 2

Bit 7	Bit 6	Bit 5	Bit 4	Bit 3	Bit 2	Bit 1	Bit 0
reserved	CMP	LB3	LB2	LB1	reserved	QE	SRP1

10.3 Write Enable for Volatile Status Register (50h)

The non-volatile Status Register bits described in Table 10-1 and Table 10-2 can also be written to as volatile bits. During power up reset, the non-volatile Status Register bits are copied to a volatile version of the Status Register that is used during device operation. This gives more flexibility to change the system configuration and memory protection schemes quickly without waiting for the typical non-volatile bit write cycles or affecting the endurance of the Status Register non-volatile bits.

To write the volatile version of the Status Register bits, the Write Enable for Volatile Status Register (50h) instruction must be issued prior to each Write Status Registers (01h) instruction. Write Enable for Volatile Status Register instruction will not set the Write Enable Latch bit. It is only valid for the next following Write Status Registers instruction, to change the volatile Status Register bit values.

Figure 10-4. Write Enable for Volatile Status Register

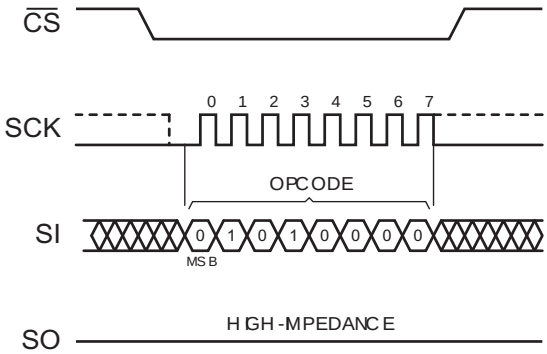

Downloaded from Arrow.com.

11. Other Commands and Functions

The AT25SF041 supports three different commands to access device identification that indicates the manufacturer, device type, and memory density. The returned data bytes provide information as shown in Table 11-1.

Table 11-1. Manufacturer and Device ID Information

Instruction	Opcode	Dummy Bytes	Manufacturer ID (Byte #1)	Device ID (Byte #2)	Device ID (Byte #3)
Read Manufacturer and Device ID	9Fh	0	1Fh	84h	01h
Read ID (Legacy Command)	90h	3	1Fh		12h
Resume from Deep Power-Down and Read Device ID	ABh	3			12h

11.1 Read Manufacturer and Device ID (9Fh)

Identification information can be read from the device to enable systems to electronically query and identify the device while it is in system.

Since not all Flash devices are capable of operating at very high clock frequencies, applications should be designed to read the identification information from the devices at a reasonably low clock frequency to ensure all devices used in the application can be identified properly. Once the identification process is complete, the application can increase the clock frequency to accommodate specific Flash devices that are capable of operating at the higher clock frequencies.

To read the identification information, the $\overline{CS}$ pin must first be asserted and the opcode of 9Fh must be clocked into the device. After the opcode has been clocked in, the device will begin outputting the identification data on the SO pin during the subsequent clock cycles. The first byte that will be output will be the Manufacturer ID followed by two bytes of Device ID information. Deasserting the $\overline{CS}$ pin will terminate the Manufacturer and Device ID read operation and put the SO pin into a high-impedance state. The $\overline{CS}$ pin can be deasserted at any time and does not require that a full byte of data be read.

Table 11-2. Manufacturer and Device ID Information

Byte No.	Data Type	Value
1	Manufacturer ID	1Fh
2	Device ID (Part 1)	84h
3	Device ID (Part 2)	01h

Table 11-3. Manufacturer and Device ID Details

Data Type	Bit 7	Bit 6	Bit 5	Bit 4	Bit 3	Bit 2	Bit 1	Bit 0	Hex Value	Details
Manufacturer ID	JEDEC Assigned Code								1Fh	JEDEC Code: 0001 1111 (1Fh for Adesto)
	0	0	0	1	1	1	1	1		

Downloaded from Arrow.com.

Table 11-3. Manufacturer and Device ID Details

Data Type	Bit 7	Bit 6	Bit 5	Bit 4	Bit 3	Bit 2	Bit 1	Bit 0	Hex Value	Details
Device ID (Part 1)	Family Code			Density Code					84h	Family Code:100 (AT25SFxxx series) Density Code: 00100 (4-Mbit)
	1	0	0	0	0	1	0	0		
Device ID (Part 2)	Sub Code			Product Version Code					01h	Sub Code: 000 (Standard series) Product Version: 00001
	0	0	0	0	0	0	0	1		

Figure 11-1. Read Manufacturer and Device ID

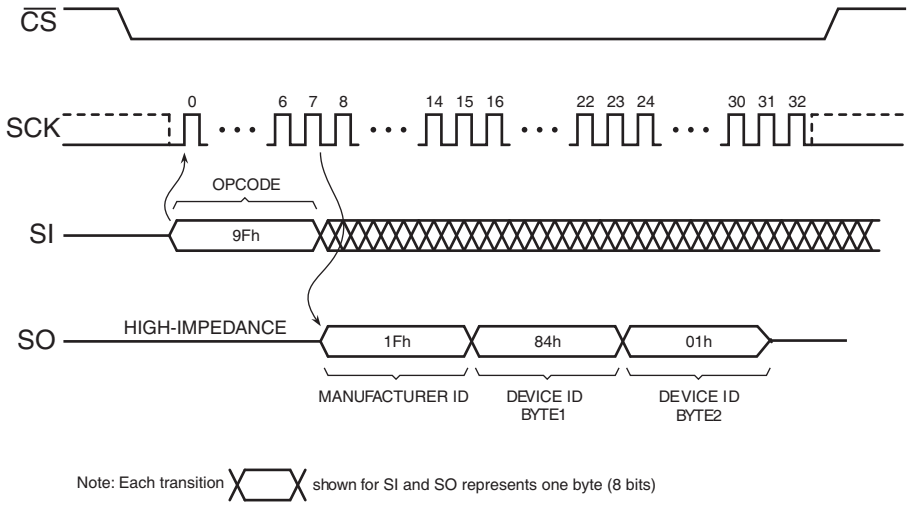

11.2 Read ID (Legacy Command) (90h)

Identification information can be read from the device to enable systems to electronically query and identify the device while it is in system. The preferred method for doing so is the JEDEC standard "The AT25SF041 supports three different commands to access device identification that indicates the manufacturer, device type, and memory density. The returned data bytes provide information as shown in Table 11-1." method described in Section on page 27; however, the legacy Read ID command is supported on the AT25SF041 to enable backwards compatibility to previous generation devices.

To read the identification information, the $\overline{CS}$ pin must first be asserted and the opcode of 90h must be clocked into the device, followed by three dummy bytes. After the opcode has been clocked in followed by three dummy bytes, the device will begin outputting the identification data on the SO pin during the subsequent clock cycles. The first byte that will be output will be the Manufacturer ID of 1Fh followed by a single byte of data representing a device code of 12h. After the device code is output, the sequence of bytes will repeat.

Deasserting the $\overline{CS}$ pin will terminate the Read ID operation and put the SO pin into a high-impedance state. The $\overline{CS}$ pin can be deasserted at any time and does not require that a full byte of data read.

Downloaded from Arrow.com.

Figure 11-2. Read ID (Legacy Command)

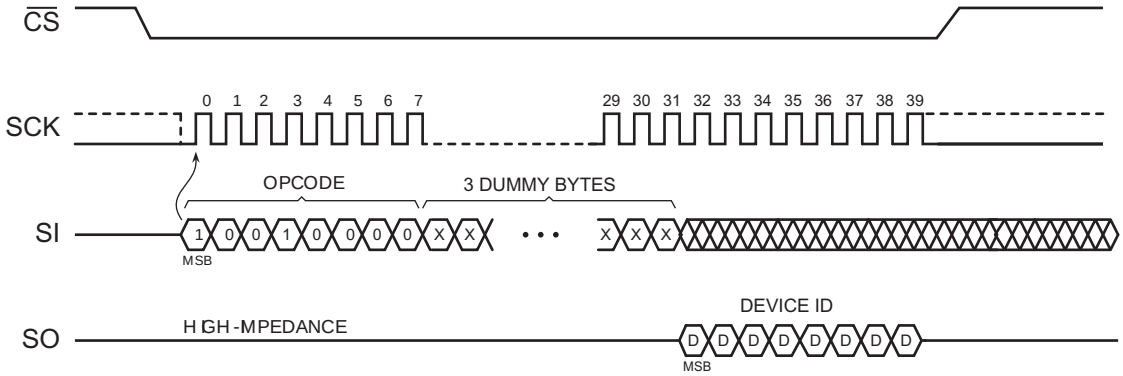

11.3 Deep Power-Down (B9h)

During normal operation, the device will be placed in the standby mode to consume less power as long as the $\overline{CS}$ pin remains deasserted and no internal operation is in progress. The Deep Power-Down command offers the ability to place the device into an even lower power consumption state called the Deep Power-Down mode.

When the device is in the Deep Power-Down mode, all commands including the Read Status Register command will be ignored with the exception of the Resume from Deep Power-Down command. Since all commands will be ignored, the mode can be used as an extra protection mechanism against program and erase operations.

Entering the Deep Power-Down mode is accomplished by simply asserting the $\overline{CS}$ pin, clocking in the opcode of B9h, and then deasserting the $\overline{CS}$ pin. Any additional data clocked into the device after the opcode will be ignored. When the $\overline{CS}$ pin is deasserted, the device will enter the Deep Power-Down mode within the maximum time of t_{EDPD}.

The complete opcode must be clocked in before the $\overline{CS}$ pin is deasserted, and the $\overline{CS}$ pin must be deasserted on an byte boundary (multiples of eight bits); otherwise, the device will abort the operation and return to the standby mode once the $\overline{CS}$ pin is deasserted. In addition, the device will default to the standby mode after a power-cycle.

The Deep Power-Down command will be ignored if an internally self-timed operation such as a program or erase cycle is in progress. The Deep Power-Down command must be reissued after the internally self-timed operation has been completed in order for the device to enter the Deep Power-Down mode.

Figure 11-3. Deep Power-Down

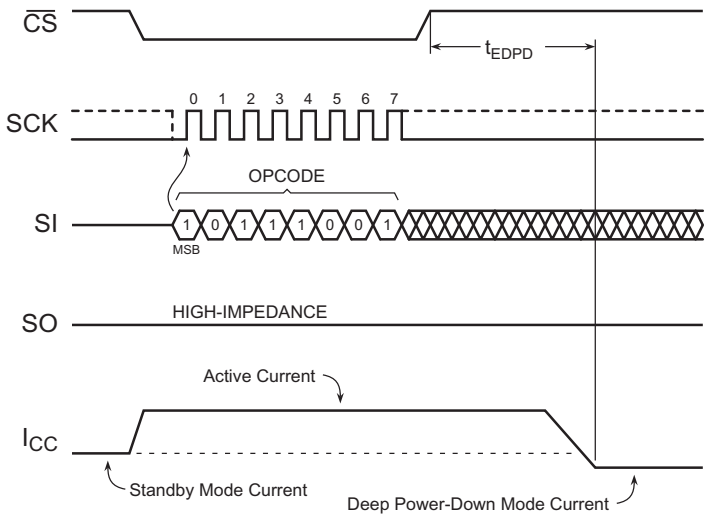

Downloaded from Arrow.com.

11.4 Resume from Deep Power-Down (ABh)

In order to exit the Deep Power-Down mode and resume normal device operation, the Resume from Deep Power-Down command must be issued. The Resume from Deep Power-Down command is the only command that the device will recognize while in the Deep Power-Down mode.

To resume from the Deep Power-Down mode, the $\overline{CS}$ pin must first be asserted and the opcode of ABh must be clocked into the device. Any additional data clocked into the device after the opcode will be ignored. When the $\overline{CS}$ pin is deasserted, the device will exit the Deep Power-Down mode within the maximum time of t_{RDPD} and return to the standby mode. After the device has returned to the standby mode, normal command operations such as Read Array can be resumed.

If the complete opcode is not clocked in before the $\overline{CS}$ pin is deasserted, or if the $\overline{CS}$ pin is not deasserted on an byte boundary (multiples of eight bits), then the device will abort the operation and return to the Deep Power-Down mode.

Figure 11-4. Resume from Deep Power-Down

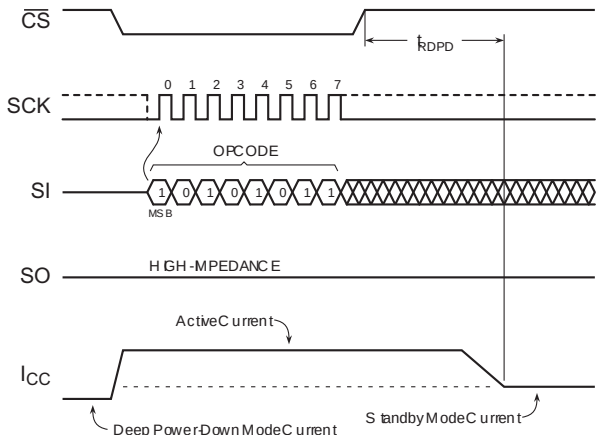

11.4.1 Resume from Deep Power-Down and Read Device ID (ABh)

The Resume from Deep Power-Down command can also be used to read the Device ID.

When used to release the device from the Power-Down state and obtain the Device ID, the $\overline{CS}$ pin must first be asserted and opcode of ABh must be clocked into the device, followed by 3 dummy bytes. The Device ID bits are then shifted out on the falling edge of SCLK with most significant bit (MSB) first as shown in Figure 11-4. This command only outputs a single byte Device ID. The Device ID value for the AT25SF041 is listed in Table 11-1.

After the last bit (bit 0) of the Device ID has been clocked out, the sequence will repeat itself starting again with bit 7 as long as the CS pin remains asserted and the SCK pin is being pulsed. After $\overline{CS}$ is deasserted it must remain high for a time duration of t_{RDPO} before new commands can be received.

The same instruction may be used to read device ID when not in power down. In that case, /CS does not have to remain high remain after it is deasserted.

Downloaded from Arrow.com.

Figure 11-5. Resume from Deep Power-Down and Read Device ID

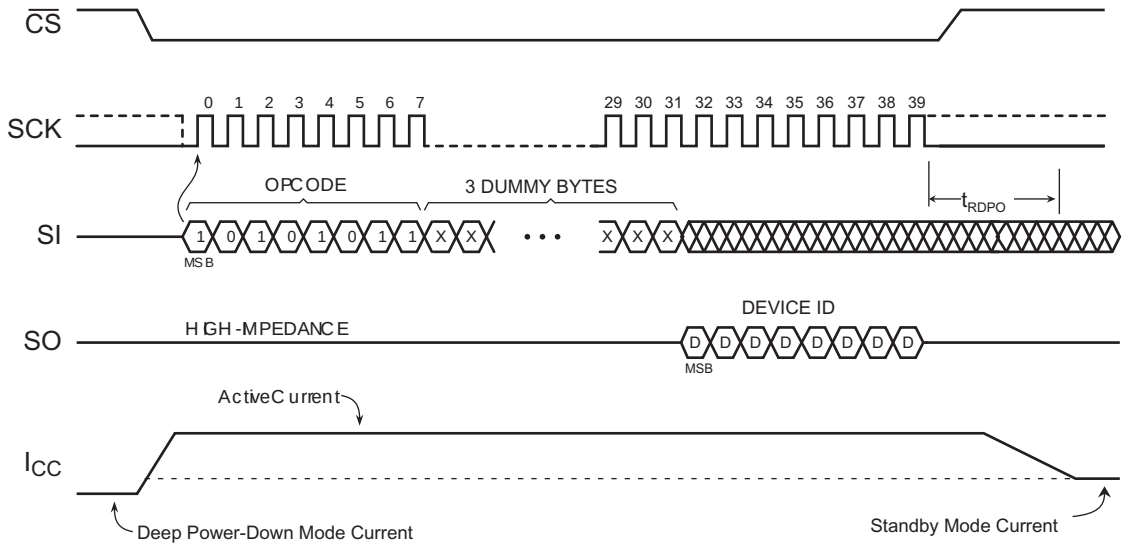

11.5 Hold Function

The $\overline{\text{HOLD}}$ pin is used to pause the serial communication with the device without having to stop or reset the clock sequence. The Hold mode, however, does not have an affect on any internally self-timed operations such as a program or erase cycle. Therefore, if an erase cycle is in progress, asserting the $\overline{\text{HOLD}}$ pin will not pause the operation, and the erase cycle will continue until it is finished.

If the QE bit value in the Status Register has been set to logical “1”, then the $\overline{\text{HOLD}}$ pin does not function as a control pin. The $\overline{\text{HOLD}}$ pin will function as an output for Quad-Output Read and input/output for Quad-I/O Read.

The Hold mode can only be entered while the $\overline{\text{CS}}$ pin is asserted. The Hold mode is activated simply by asserting the $\overline{\text{HOLD}}$ pin during the SCK low pulse. If the $\overline{\text{HOLD}}$ pin is asserted during the SCK high pulse, then the Hold mode won’t be started until the beginning of the next SCK low pulse. The device will remain in the Hold mode as long as the $\overline{\text{HOLD}}$ pin and $\overline{\text{CS}}$ pin are asserted.

While in the Hold mode, the SO pin will be in a high-impedance state. In addition, both the SI pin and the SCK pin will be ignored. The $\overline{\text{WP}}$ pin, however, can still be asserted or deasserted while in the Hold mode.

To end the Hold mode and resume serial communication, the $\overline{\text{HOLD}}$ pin must be deasserted during the SCK low pulse. If the $\overline{\text{HOLD}}$ pin is deasserted during the SCK high pulse, then the Hold mode won’t end until the beginning of the next SCK low pulse.

If the $\overline{\text{CS}}$ pin is deasserted while the $\overline{\text{HOLD}}$ pin is still asserted, then any operation that may have been started will be aborted, and the device will reset the WEL bit in the Status Register back to the logical “0” state.

Downloaded from Arrow.com.

Figure 11-6. Hold Mode

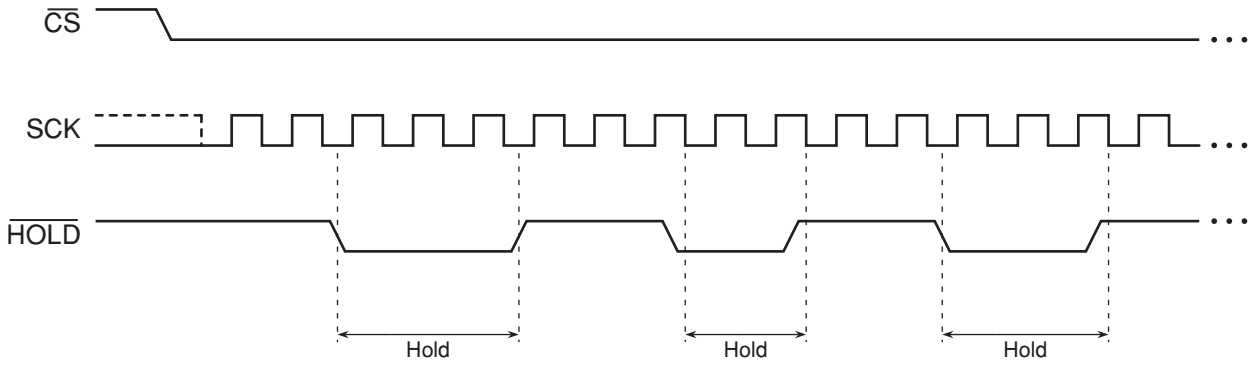

Downloaded from Arrow.com.

12. Electrical Specifications

12.1 Absolute Maximum Ratings*

Temperature under Bias. . . . . -55°C to +125°C

Storage Temperature . . . . . -65°C to +150°C

All Input Voltages (including NC Pins)
with Respect to Ground . . . . . -0.6V to +4.1V

All Output Voltages
with Respect to Ground . . . . . -0.6V to V_{CC} + 0.5V

*Notice: Stresses beyond those listed under "Absolute Maximum Ratings" may cause permanent damage to the device. This is a stress rating only and functional operation of the device at these or any other conditions beyond those indicated in the operational sections of this specification is not implied. Exposure to absolute maximum rating conditions for extended periods may affect device reliability.

12.2 DC and AC Operating Range

		AT25SF041
Operating Temperature (Case)	Industrial	-40°C to 85°C
V_{CC} Power Supply		2.5V to 3.6V

12.3 DC Characteristics

Symbol	Parameter	Condition	2.5V to 3.6V			Units
			Min	Typ	Max	
I_{DPD}	Deep Power-Down Current	$\overline{CS}$, $\overline{HOLD}$, $\overline{WP}$ = V_{IH} All inputs at CMOS levels		2	5	µA
I_{SB}	Standby Current	$\overline{CS}$, $\overline{HOLD}$, $\overline{WP}$ = V_{IH} All inputs at CMOS levels		13	25	µA
I_{CC1} (1)	Active Current, Read (03h, 0Bh) Operation	f = 20MHz; I_{OUT} = 0mA		3	6	mA
		f = 50MHz; I_{OUT} = 0mA		4	7	mA
		f = 85MHz; I_{OUT} = 0mA		5	8	mA
I_{CC2} (1)	Active Current,(3Bh, BBh Read Operation (Dual)	f = 50MHz; I_{OUT} = 0mA		5	8	mA
		f = 85MHz; I_{OUT} = 0mA		6	10	mA
I_{CC3} (1)	Active Current,(6Bh, EBh Read Operation (Quad)	f = 50MHz; I_{OUT} = 0mA		6	10	mA
		f = 85MHz; I_{OUT} = 0mA		8	12	mA
I_{CC4} (1)	Active Current, Program Operation	$\overline{CS}$ = V_{CC}		10	16	mA
I_{CC5} (1)	Active Current, Erase Operation	$\overline{CS}$ = V_{CC}		10	16	mA

Downloaded from Arrow.com.

Symbol	Parameter	Condition	2.5V to 3.6V			Units
			Min	Typ	Max	
I_{LI}	Input Load Current	All inputs at CMOS levels		1	1	µA
I_{LO}	Output Leakage Current	All inputs at CMOS levels		1	1	µA
V_{IL}	Input Low Voltage				V_{CC} x 0.3	V
V_{IH}	Input High Voltage		V_{CC} x 0.7			V
V_{OL}	Output Low Voltage	I_{OL} = 1.6mA; V_{CC} = 2.5V			0.4	V
V_{OH}	Output High Voltage	I_{OH} = -100µA	V_{CC} - 0.2V			V

1. Typical values measured at 3.0V @ 25°C for the 2.5V to 3.6V range

12.4 AC Characteristics - Maximum Clock Frequencies

Symbol	Parameter	2.5V to 3.6V			2.7V to 3.6V			Units
		Min	Typ	Max	Min	Typ	Max	
f_{CLK}	Maximum Clock Frequency for All Operations (excluding 0Bh opcode)			104			104	MHz
f_{RDLF}	Maximum Clock Frequency for 03h Opcode			50			50	MHz
f_{RDHF}	Maximum Clock Frequency for 0Bh Opcode			70			85	MHz
f_{RDDO}	Maximum Clock Frequency for 3B, BBh Opcode			70			85	MHz
f_{RDQO}	Maximum Clock Frequency for 6B, EBh Opcode			70			85	MHz

12.5 AC Characteristics - All Other Parameters

Symbol	Parameter	2.5V to 3.6V			2.7V to 3.6V			Units
		Min	Typ	Max	Min	Typ	Max	
t_{CLKH}	Clock High Time	5			5			ns
t_{CLKL}	Clock Low Time	5			5			ns
t_{CLKR} (1)	Clock Rise Time, Peak-to-Peak (Slew Rate)	0.1			0.1			V/ns
t_{CLKF} (1)	Clock Fall Time, Peak-to-Peak (Slew Rate)	0.1			0.1			V/ns
t_{CSH}	Chip Select High Time	10			10			ns
t_{CSLS}	Chip Select Low Setup Time (relative to Clock)	5			5			ns
t_{CSLH}	Chip Select Low Hold Time (relative to Clock)	5			5			ns
t_{CSHS}	Chip Select High Setup Time (relative to Clock)	5			5			ns

Downloaded from Arrow.com.

12.5 AC Characteristics - All Other Parameters

Symbol	Parameter	2.5V to 3.6V			2.7V to 3.6V			Units
		Min	Typ	Max	Min	Typ	Max	
t_{CSHH}	Chip Select High Hold Time (relative to Clock)	5			5			ns
t_{DS}	Data In Setup Time	2			2			ns
t_{DH}	Data In Hold Time	2			2			ns
t_{DIS} (1)	Output Disable Time			7			6	ns
t_V	Output Valid Time (03h, 0Bh)			7			6	ns
	Output Valid Time (3Bh, BBh - Dual)			7			7	
	Output Valid Time (6Bh, EBh - Quad)			8			8	
t_{OH}	Output Hold Time	0			0			ns
t_{HLS}	$\overline{HOLD}$ Low Setup Time (relative to Clock)	5			5			ns
t_{HLH}	$\overline{HOLD}$ Low Hold Time (relative to Clock)	5			5			ns
t_{HHS}	$\overline{HOLD}$ High Setup Time (relative to Clock)	5			5			ns
t_{HHH}	$\overline{HOLD}$ High Hold Time (relative to Clock)	5			5			ns
t_{HLQZ} (1)	$\overline{HOLD}$ Low to Output High-Z			6			6	ns
t_{HHQZ} (1)	$\overline{HOLD}$ High to Output High-Z			6			6	ns
t_{WPS} (1) (2)	Write Protect Setup Time	20			20			ns
t_{WPH} (1)(2)	Write Protect Hold Time	100			100			ns
t_{EDPD} (1)	Chip Select High to Deep Power-Down			1			1	µs
t_{RDPD} (1)	Chip Select High to Standby Mode			5			5	µs
t_{RDPO} (1)	Resume Deep Power-Down, $\overline{CS}$ High to ID			5			5	µs

1. Not 100% tested (value guaranteed by design and characterization).
2. Only applicable as a constraint for the Write Status Register command when BPL = 1.

12.6 Program and Erase Characteristics

Symbol	Parameter		2.5V to 3.6V			Units
			Min	Typ	Max	
t_{PP} (1)	Page Program Time (256 Bytes)			0.7	2.5	ms
t_{BP}	Byte Program Time			5		µs
t_{BLKE} (1)	Block Erase Time	4 Kbytes		60	300	ms
		32 Kbytes		300	1300	
		64 K bytes		500	2200	
t_{CHPE} (1)(2)	Chip Erase Time			4	10	sec

Downloaded from Arrow.com.

12.6 Program and Erase Characteristics

Symbol	Parameter	2.5V to 3.6V			
		Min	Typ	Max	Units
t_{SRP} (1)	Security Register Program Time			2.5	ms
t_{SRP} (1)	Security Register Erase Time			15	ms
t_{WRSR} (2)	Write Status Register Time			15	ms

1. Maximum values indicate worst-case performance after 100,000 erase/program cycles.
2. Not 100% tested (value guaranteed by design and characterization).

12.7 Power-Up Conditions

Symbol	Parameter	Min	Max	Units
t_{VCSL}	Minimum V_{CC} to Chip Select Low Time	20		µs
t_{PUW}	Power-up Device Delay Before Program or Erase Allowed		10	ms
V_{POR}	Power-on Reset Voltage		2.3	V

Downloaded from Arrow.com.

12.8 Input Test Waveforms and Measurement Levels

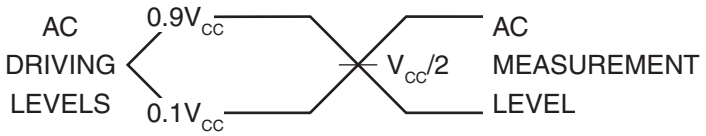

t_R, t_F < 2 ns (10% to 90%)

12.9 Output Test Load

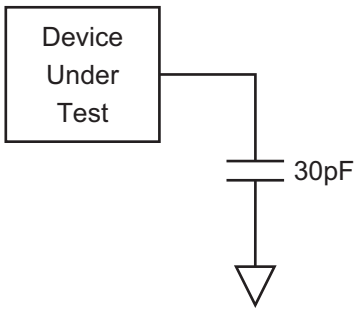

13. AC Waveforms

Figure 13-1. Serial Input Timing

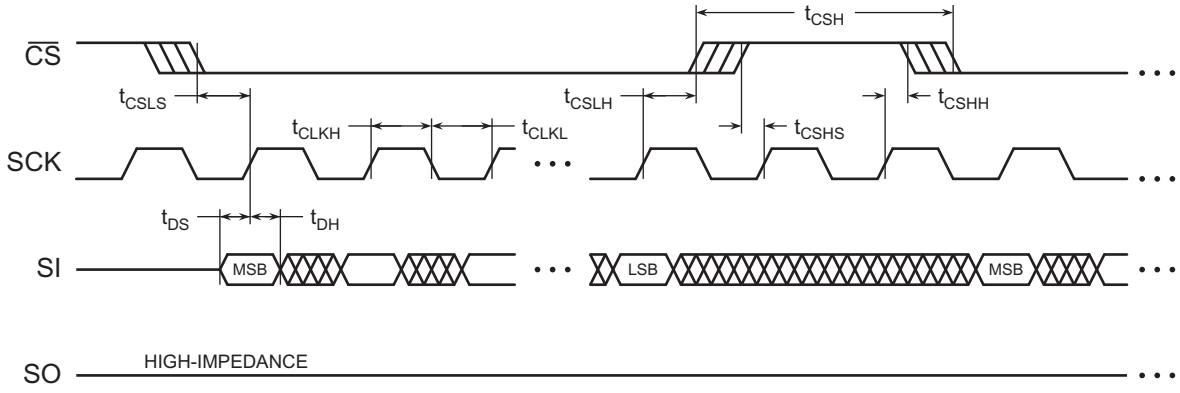

Figure 13-2. Serial Output Timing

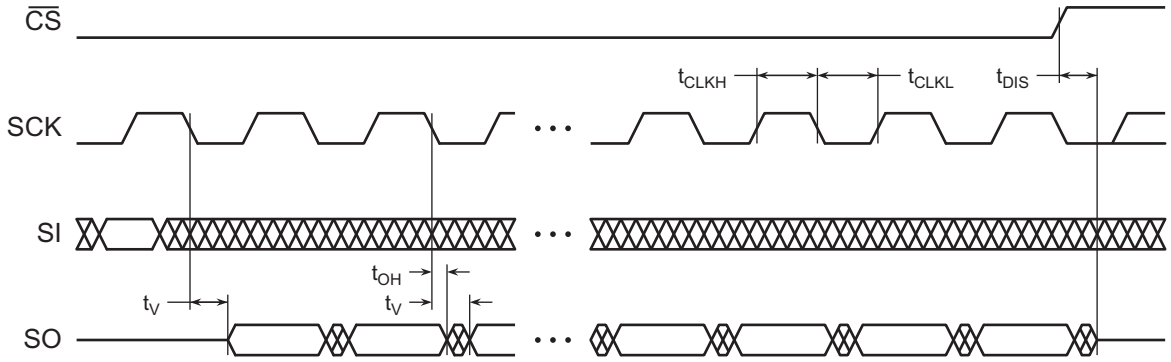

Downloaded from Arrow.com.

Figure 13-3. $\overline{WP}$ Timing for Write Status Register Command When BPL = 1

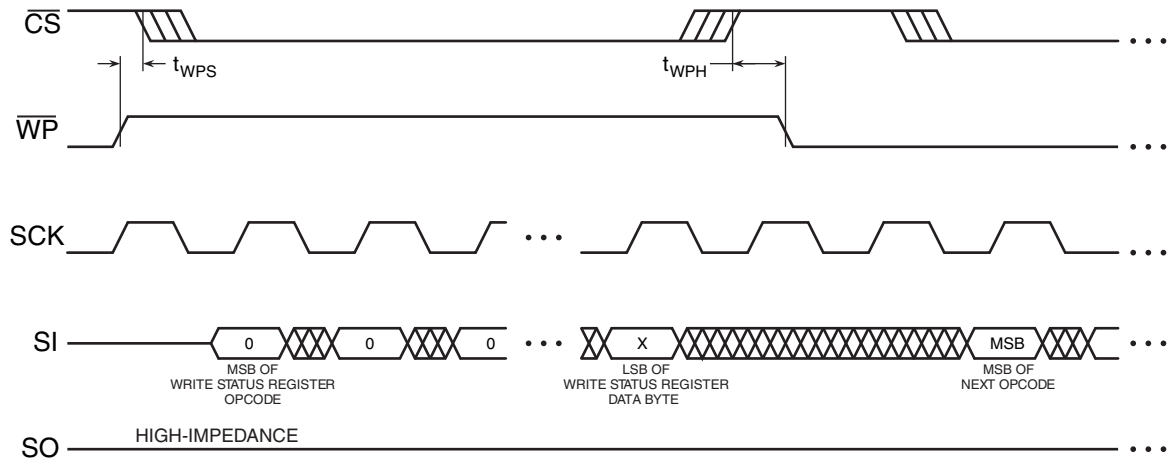

Figure 13-4. $\overline{HOLD}$ Timing – Serial Input

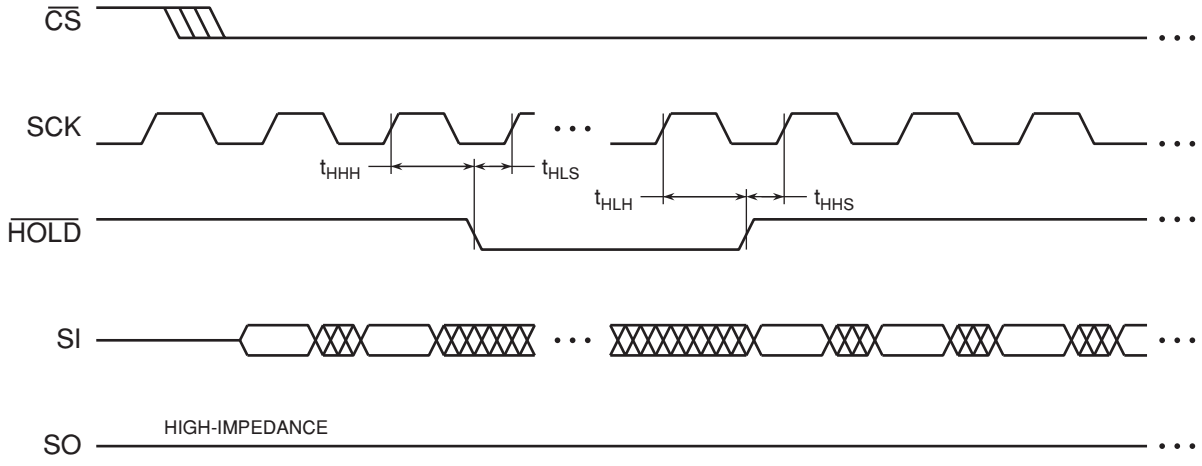

Figure 13-5. $\overline{HOLD}$ Timing – Serial Output

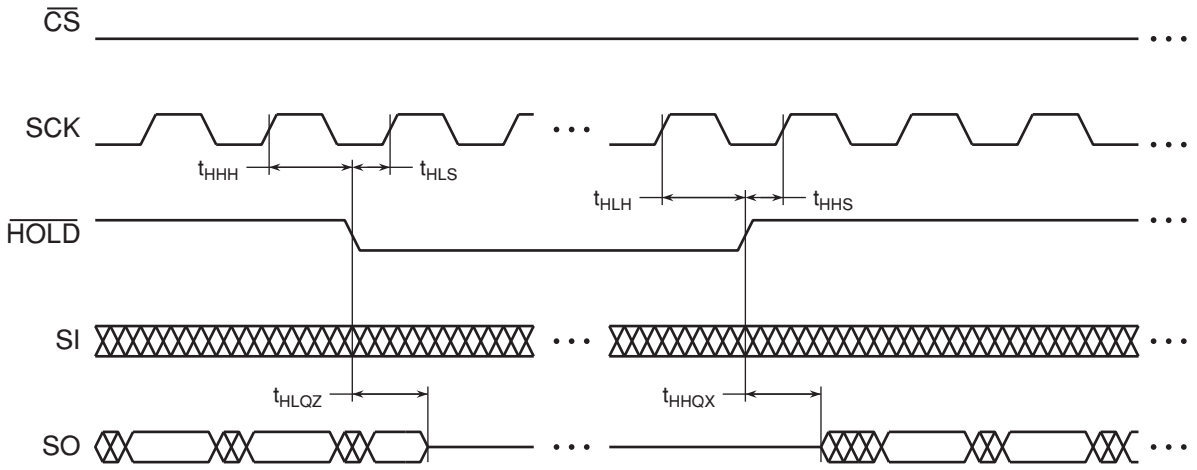

Downloaded from Arrow.com.

14. Ordering Information

14.1 Ordering Code Detail

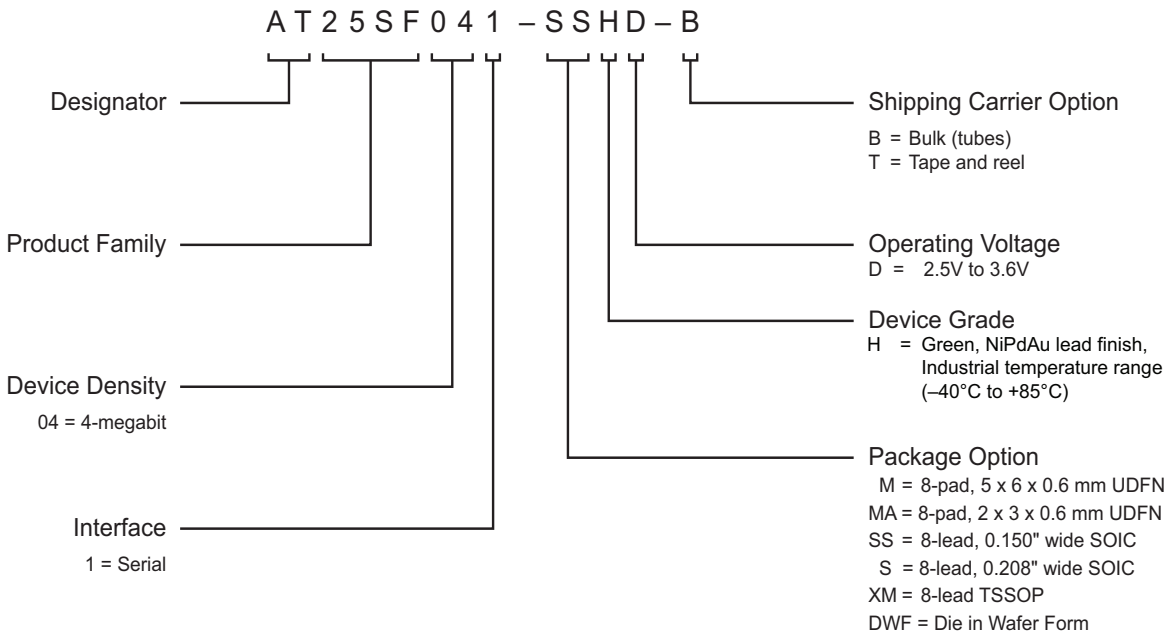

Ordering Code [1]	Package	Operating Voltage	Max. Freq. (MHz)	Operation Range
AT25SF041-SSHD-B	8S1	2.5V to 3.6V	85MHz	Industrial (-40°C to +85°C)
AT25SF041-SSHD-T				
AT25SF041-SHD-B	8S2			
AT25SF041-SHD-T				
AT25SF041-MHD-T	8MA1			
AT25SF041-MAHD-T	8MA3			
AT25SF041-XMHD-T	8X			
AT25SF041-DWF [2]	DWF			

1. The shipping carrier option code is not marked on the devices.
2. Contact Adesto for mechanical drawing or Die Sales information.

Downloaded from Arrow.com.

Package Type	
8S1	8-lead, 0.150" Wide, Plastic Gull Wing Small Outline Package (JEDEC SOIC)
8S2	8-lead, 0.208" Wide, Plastic Gull Wing Small Outline Package (EIAJ SOIC)
8MA1	8-pad (5 x 6 x 0.6mm body), Thermally Enhanced Plastic Ultra Thin Dual Flat No-lead (UDFN)
8MA3	8-pad (2 x 3 x 0.6mm body), Thermally Enhanced Plastic Ultra Thin Dual Flat No-lead (UDFN)
8X	8-lead (4 x 4 mm body), Thin Shrink Small Outline Package (TSSOP)
DWF	Die in Wafer Form

Downloaded from Arrow.com.

15. Packaging Information

15.1 8S1 – 8-lead, .150” JEDEC SOIC

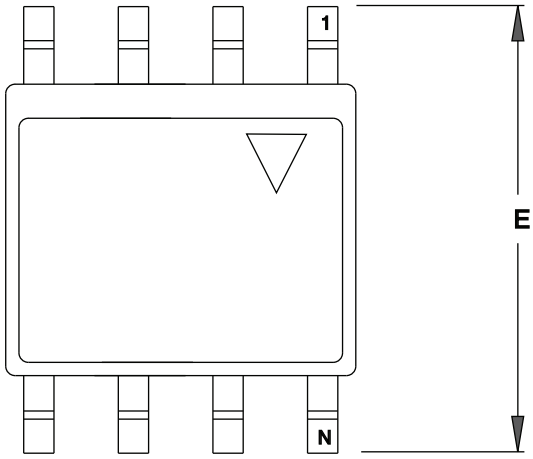

TOP VIEW

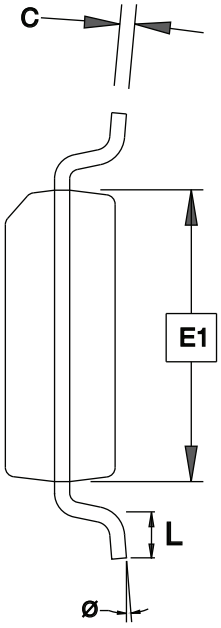

END VIEW

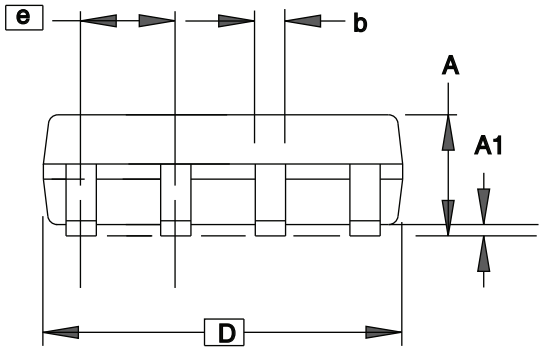

SIDE VIEW

Notes: This drawing is for general information only. Refer to JEDEC Drawing MS-012, Variation AA for proper dimensions, tolerances, datums, etc.

COMMON DIMENSIONS
(Unit of Measure = mm)

SYMBOL	MIN	NOM	MAX	NOTE
A	1.35	–	1.75	
A1	0.10	–	0.25	
b	0.31	–	0.51	
C	0.17	–	0.25	
D	4.80	–	5.05	
E1	3.81	–	3.99	
E	5.79	–	6.20	
e	1.27 BSC			
L	0.40	–	1.27	
Ø	0°	–	8°	

8/20/14

adesto TECHNOLOGIES Package Drawing Contact: contact@adestotech.com	TITLE 8S1, 8-lead (0.150”Wide Body), Plastic Gull Wing Small Outline (JEDEC SOIC)	GPC SWB	DRAWING NO. 8S1	REV. G

Downloaded from Arrow.com.

15.2 8S2 – 8-lead, .208” EIAJ SOIC

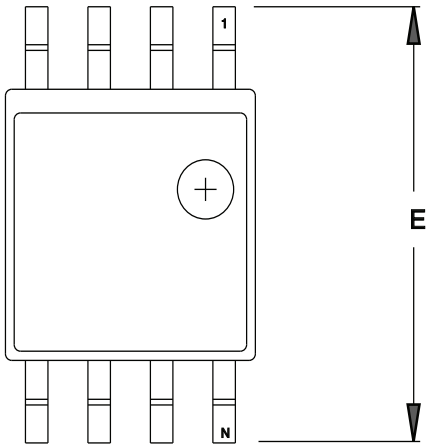

TOP VIEW

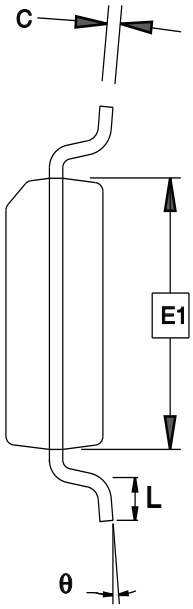

END VIEW

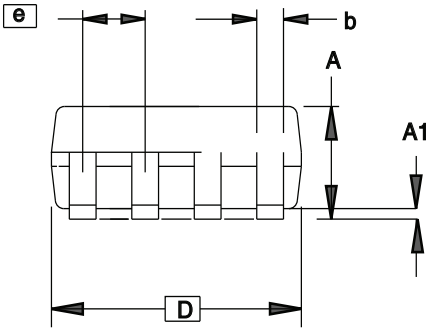

SIDE VIEW

COMMON DIMENSIONS
(Unit of Measure = mm)

SYMBOL	MIN	NOM	MAX	NOTE
A	1.70		2.16	
A1	0.05		0.25	
b	0.35		0.48	4
C	0.15		0.35	4
D	5.13		5.35	
E1	5.18		5.40	2
E	7.70		8.26	
L	0.51		0.85	
θ	0°		8°	
e	1.27 BSC			3

Notes: 1. This drawing is for general information only; refer to EIAJ Drawing EDR-7320 for additional information.
2. Mismatch of the upper and lower dies and resin burrs aren't included.
3. Determines the true geometric position.
4. Values b,C apply to plated terminal. The standard thickness of the plating layer shall measure between 0.007 to .021 mm.

4/15/08

adesto® TECHNOLOGIES Package Drawing Contact: contact@adestotech.com	TITLE 8S2, 8-lead, 0.208” Body, Plastic Small Outline Package (EIAJ)	GPC STN	DRAWING NO. 8S2	REV. F

Downloaded from Arrow.com.

15.3 8MA1 – UDFN

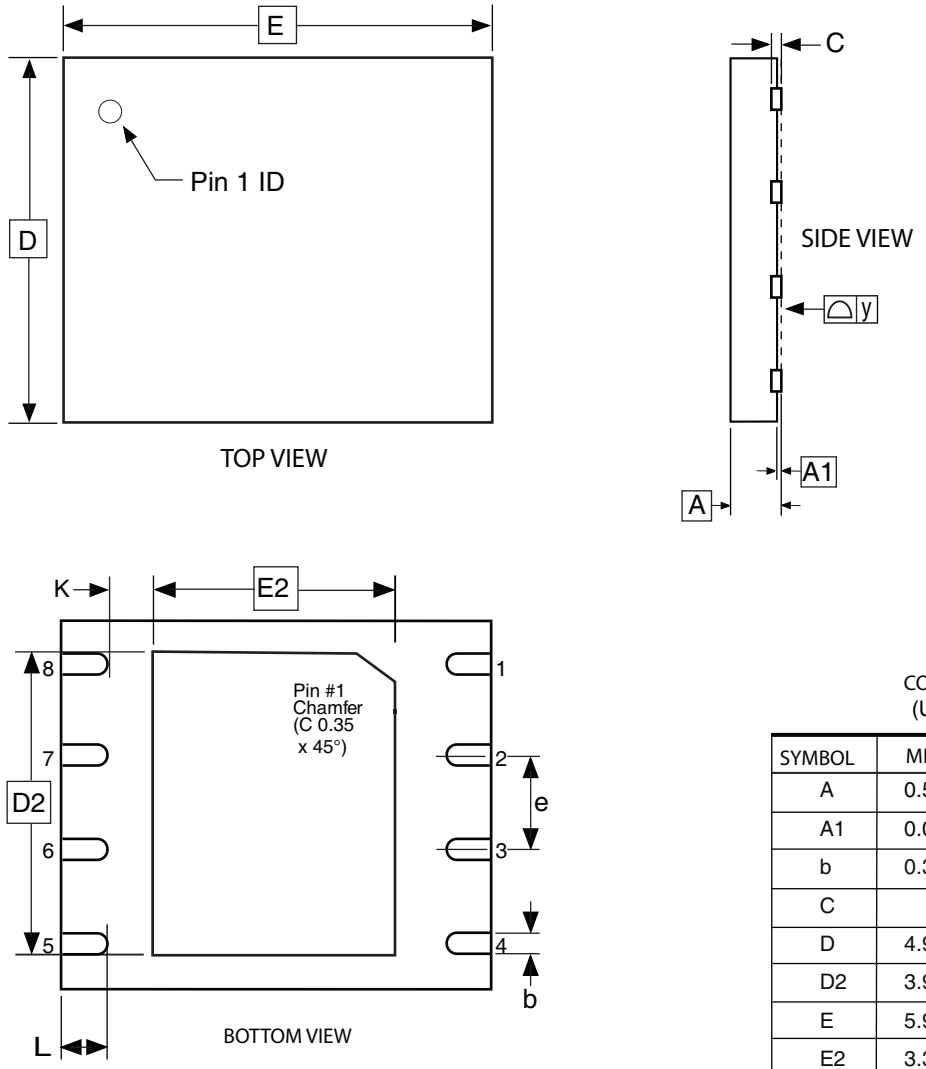

COMMON DIMENSIONS
(Unit of Measure = mm)

SYMBOL	MIN	NOM	MAX	NOTE
A	0.50	0.55	0.60	
A1	0.00	0.02	0.05	
b	0.35	0.40	0.48	
C	0.150 REF			
D	4.90	5.00	5.10	
D2	3.90	4.00	4.05	
E	5.90	6.00	6.10	
E2	3.30	3.40	3.45	
e	1.27 BSC			
L	0.55	0.60	0.65	
y	0.00	–	0.08	
K	0.20	–	–	

Notes: 1. All dimensions are in mm. Angles in degrees.
2. Bilateral coplanarity zone applies to the exposed heat sink slug as well as the terminals.

8/26/14

	TITLE	GPC	DRAWING NO.	REV.
adesto TECHNOLOGIES Package Drawing Contact: contact@adestotech.com	8MA1, 8-pad (5 x 6 x 0.6 mm Body), Thermally Enhanced Plastic Ultra Thin Dual Flat No Lead Package (UDFN)	YFG	8MA1	GT

Note: Subject to change.

Downloaded from Arrow.com.

15.4 8MA3 – UDFN

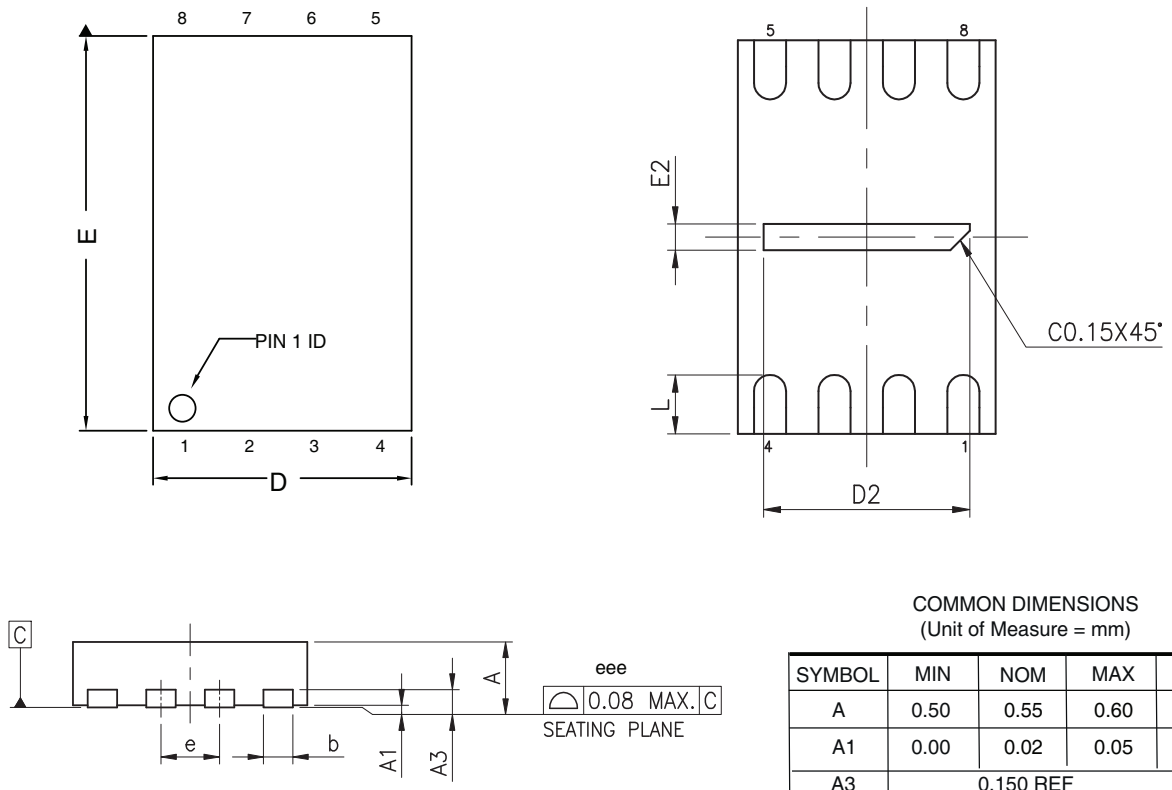

COMMON DIMENSIONS
(Unit of Measure = mm)

SYMBOL	MIN	NOM	MAX	NOTE
A	0.50	0.55	0.60	
A1	0.00	0.02	0.05	
A3		0.150 REF		
b	0.20	0.25	0.30	
D		2.00 BSC		
D2	1.55	1.60	1.65	
E		3.00 BSC		
E2	0.15	0.20	0.25	
e		0.50 BSC		
L	0.40	0.45	0.50	
eee	–	–	0.08	

Notes: 1. All dimensions are in mm. Angles in degrees.
2. Bilateral coplanarity zone applies to the exposed heat sink slug as well as the terminals.

8/26/14

adesto® TECHNOLOGIES Package Drawing Contact: contact@adestotech.com	TITLE 8MA3, 8-pad, 2 x 3 x 0.6 mm Body, 0.5 mm Pitch, 1.6 x 0.2 mm Exposed Pad, Saw Singulated Thermally Enhanced Plastic Ultra Thin Dual Flat No Lead Package (UDFN/USON)	GPC YCQ	DRAWING NO. 8MA3	REV. GT

Downloaded from Arrow.com.

15.5 8X – TSSOP

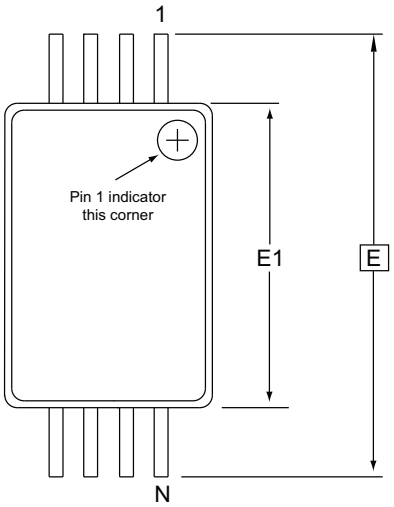

Top View

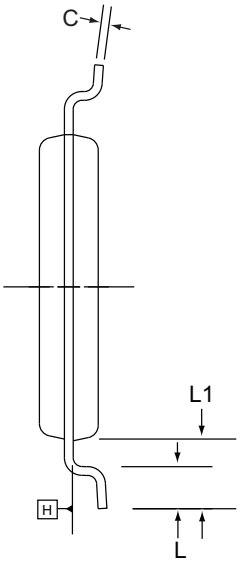

End View

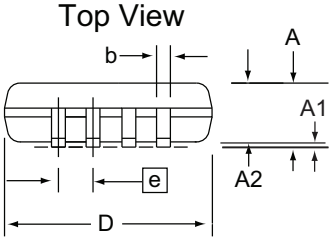

Side View

Notes:
1. This drawing is for general information only. Refer to JEDEC Drawing MO-153, Variation AA, for proper dimensions, tolerances, datums, etc.
2. Dimension D does not include mold Flash, protrusions or gate burrs. Mold Flash, protrusions and gate burrs shall not exceed 0.15mm (0.006in) per side.
3. Dimension E1 does not include inter-lead Flash or protrusions. Inter-lead Flash and protrusions shall not exceed 0.25mm (0.010in) per side.
4. Dimension b does not include Dambar protrusion. Allowable Dambar protrusion shall be 0.08mm total in excess of the b dimension at maximum material condition. Dambar cannot be located on the lower radius of the foot. Minimum space between protrusion and adjacent lead is 0.07mm.
5. Dimension D and E1 to be determined at Datum Plane H.

COMMON DIMENSIONS
(Unit of Measure = mm)

SYMBOL	MIN	NOM	MAX	NOTE
A	-	-	1.20	
A1	0.05	-	0.15	
A2	0.80	1.00	1.05	
D	2.90	3.00	3.10	2, 5
E	6.40 BSC			
E1	4.30	4.40	4.50	3, 5
b	0.19	–	0.30	4
e	0.65 BSC			
L	0.45	0.60	0.75	
L1	1.00 REF			
C	0.09	-	0.20	

12/8/11

adesto TECHNOLOGIES Package Drawing Contact: contact@adestotech.com	TITLE 8X, 8-lead 4.4mm Body, Plastic Thin Shrink Small Outline Package (TSSOP)	GPC TNR	DRAWING NO. 8X	REV. E

Downloaded from Arrow.com.

16. Revision History

Revision Level – Release Date	History
A – April 2014	Initial release. Document posted to public website.
B – May 2014	Updated memory array protection bits: Address Range 07E000h-07FFFFh. Removed tray shipping carrier option from DFN packages (-Y). Removed Erase Suspend and Resume feature.
C – July 2014	Removed quad input references on pin descriptions. Corrected Opcode reference for Read Array; OBh uses f_{RDHF}. Corrected document control number (DS-25SF041). Removed TSSOP bulk shipping option. Removed Preliminary status.
D – August 2014	Corrected 8S1, 8MA1 and 8MA3 package outline drawings.
E – August 2015	Removed DFN (not in production) footnote. Added Die in Wafer Form (DWF) ordering option. Removed mention of Suspend/Resume in $\overline{WP}$ pin description.
F – April 2016	Updated 90h opcode description (added 3 dummy bytes).
G – August 2017	Updated corporate address.

Downloaded from Arrow.com.

Corporate Office

California | USA
Adesto Headquarters
3600 Peterson Way
Santa Clara, CA 95054
Phone: (+1) 408.400.0578
Email: contact@adestotech.com

© 2017 Adesto Technologies. All rights reserved. / Rev.: DS-25SF041–044G–8/2017

Adesto®, the Adesto logo, CBRAM®, and DataFlash® are registered trademarks or trademarks of Adesto Technologies. All other marks are the property of their respective owners.

Disclaimer: Adesto Technologies Corporation makes no warranty for the use of its products, other than those expressly contained in the Company's standard warranty which is detailed in Adesto's Terms and Conditions located on the Company's web site. The Company assumes no responsibility for any errors which may appear in this document, reserves the right to change devices or specifications detailed herein at any time without notice, and does not make any commitment to update the information contained herein. No licenses to patents or other intellectual property of Adesto are granted by the Company in connection with the sale of Adesto products, expressly or by implication. Adesto's products are not authorized for use as critical components in life support devices or systems.

Downloaded from Arrow.com.