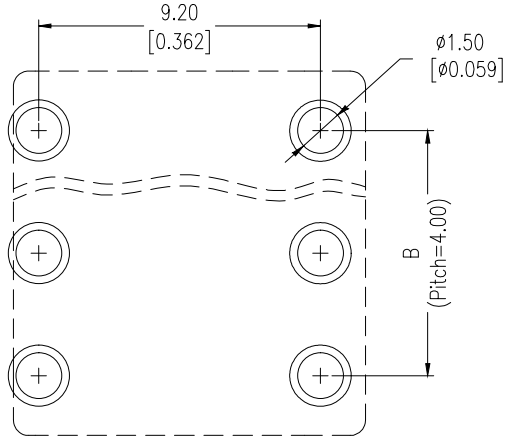

Recommended P.C.B Layout(Top Side)
(PCB BOARD TOLERANCE±0.05)

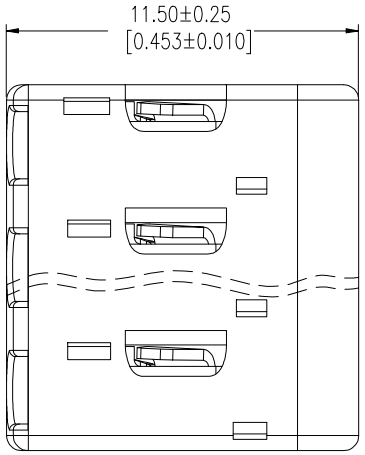

① Notes:
Rated current: 3~9AMP
Contact resistance: 20MΩ max.
Withstand voltage: 500V AC
Insulation resistance: 1000MΩ min.
Operation temperature: -40°C to +105°C
Solder Temperature: 260°C, 5s
Application Wire Range:
Solid Wire: AWG20~AWG18
Strand Wire: AWG20~AWG18

Contact material: Phosphor Bronze (C5191)
Contact plating: 100~200u" Sn over 50u" Ni
③ Insulator material: LCP+30%GF UL 94 V-0 White Color

AWBR-400-xx-Rx1
- T = Tube
- R = T&R
- PIN COUNT

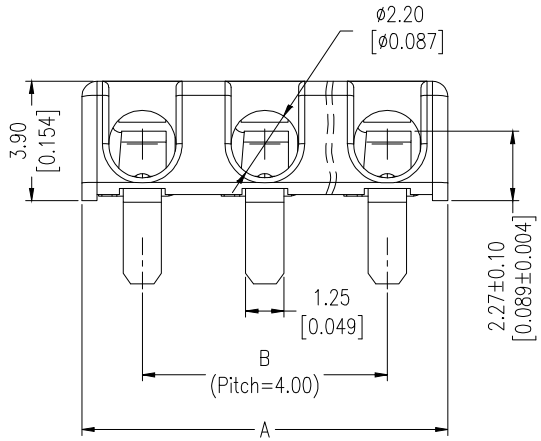

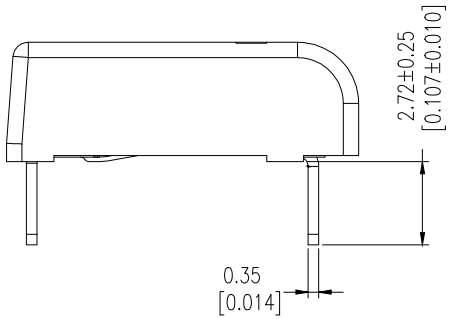

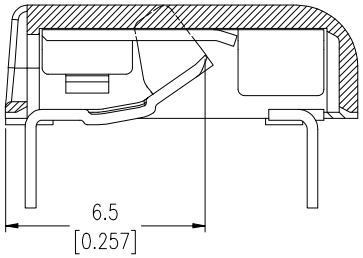

3	11.95	8.00
2	7.90	4.00
1	3.95	/
PIN	A	B

RoHS compliant
Unit: mm

② UL File No.: E198287

Scale	Free
TOLERANCE	
.X	±0.40
.XX	±0.25
.XXX	±0.15
DIM	TOL
Angle	±1.5°

Id.	Modification	Date	Name
③	Add the insulator color	12.06.2019	Winnie
②	Add the File No.	27.07.2017	Winnie
①	Update note	25.07.2016	Ray
⓪	Drawn	25.07.2016	Ray

	Date	Name
Drawn	25.07.2016	Ray
Approved	12.06.2019	Winnie

ASSMANN wsw components

Customer-No.

ASSMANN WSW-No.
AWBR-400-xx-Rx1

Drawing-No.
ASS 7333 CO

rev03

Replace

Sheet

SV4188

Downloaded from Arrow.com.