# RAFIX 22 FS+, mushroom pushbutton, momentary contact function, Mushroom head black



## Description

The mushroom pushbutton offers a latching pushbutton option for every application. It is characterized by the form and function of an emergency stop, but is declared as a pushbutton. The emergency stop switching elements are to be used. Various contact functions are possible. The mushroom pushbutton Plus 1 must be used with the emergency stop Plus 1 switching elements (PCB: 1.20.126.414/0000 or QC: 1.20.126.514/0000).
The illuminated version is illuminated through a central round window.

## technical data

**general**

| | |
|---|---|
| Disassembly possible | no |
| Color of mushroom | black |
| Property of bezel / mushroom | opaque |
| Collar color | black |
| Collar shape | round |
| Operating temperature, min. | -25 °C |
| Operating temperature, max. | 70 °C |
| Storage temperature, min. | -40 °C |
| Storage temperature, max. | 80 °C |
| illuminated | No |
| Packaging | Box |
| Packaging unit | 2 pcs. |
| Net weight | 16.8 g |
| Operating life | 50,000 cycles |
| B10 | 65,000 cycles |
| Degree of protection, front side, according to DIN EN 60529 | IP65 |
| Environment resistance | IEC 60068-2-33 |
| Salt-spray resistance according to standard | IEC 60068-2-11 |
| Chemical resistance according to standard | ISO 16750-5 |
| Minimum order quantity (MOQ) | 10 pcs. |
| RoHS compliant | Yes |
| REACH compliant | Yes |
| Country of origin | HU |

**mounting diameters**

| | |
|---|---|
| Outside dimension, length | 29.8 mm |
| Outside dimension, width | 29.8 mm |

**direct links**

RAFI eCatalog

The information in this data sheet only contains general descriptions and / or performance features, which may not apply precisely as described to the respective application, and which my change due to further product enhancements. The technical data, illustrations and other information about our products are the mere results of individual technical testing. These descriptions and other product features are only binding if they expressly agreed upon at the time of the conclusion of a binding contract. In all other cases, we reserve the right to make technical changes as well as changes of availability. Pictures and other graphic illustrations are approximations only. All product names may be trademarks or brand names of the RAFI Group or any other sub-supplier of RAFI. The use of such by any third parties for their own purposes may infringe the rights of the respective entity holding those rights.


**RAFI GmbH & Co. KG**

Ravensburger Str. 128-134
88276 Berg / Ravensburg
Germany
www.rafi-group.com,
info.headquarters@rafi-group.com

Downloaded from Arrow.com.

| | |
|---|---|
| Outside dimension, height | 42.1 mm |
| Mounting hole | 22.3 mm |
| Mounting depth | 9.2 mm |
| Installation height | 33.2 mm |
| Grid, min. | 30 x 30 mm |
| Collar dimension | ø 29,8 mm |

**mechanical data**

| | |
|---|---|
| Fixing | Threaded ring |
| Actuation function | momentary contact function |
| Operating force, max. | 100 N |
| Threaded ring torque, max. | 1.2 Nm |

**Specifications according to UL 60947**

| | |
|---|---|
| UL Enclosure Type Rating front | type 1 |
| side | type 4X indoor |

## Use according to UL:

RAFIX control devices are defined at RAFI as modular elements, consisting of an actuating element, if necessary a coupling and an individual contact or lighting unit.

Actuating elements (such as pushbuttons, emergency stop actuators, etc.) have the intended tactility, reset and function only when assembled with the appropriate switching elements.

The information in this data sheet only contains general descriptions and / or performance features, which may not apply precisely as described to the respective application, and which my change due to further product enhancements. The technical data, illustrations and other information about our products are the mere results of individual technical testing. These descriptions and other product features are only binding if they expressly agreed upon at the time of the conclusion of a binding contract. In all other cases, we reserve the right to make technical changes as well as changes of availability. Pictures and other graphic illustrations are approximations only. All product names may be trademarks or brand names of the RAFI Group or any other sub-supplier of RAFI. The use of such by any third parties for their own purposes may infringe the rights of the respective entity holding those rights.


**RAFI GmbH & Co. KG**

Ravensburger Str. 128-134
88276 Berg / Ravensburg
Germany
www.rafi-group.com,
info.headquarters@rafi-group.com

Downloaded from Arrow.com.

## drawings

### Dimensioned drawing

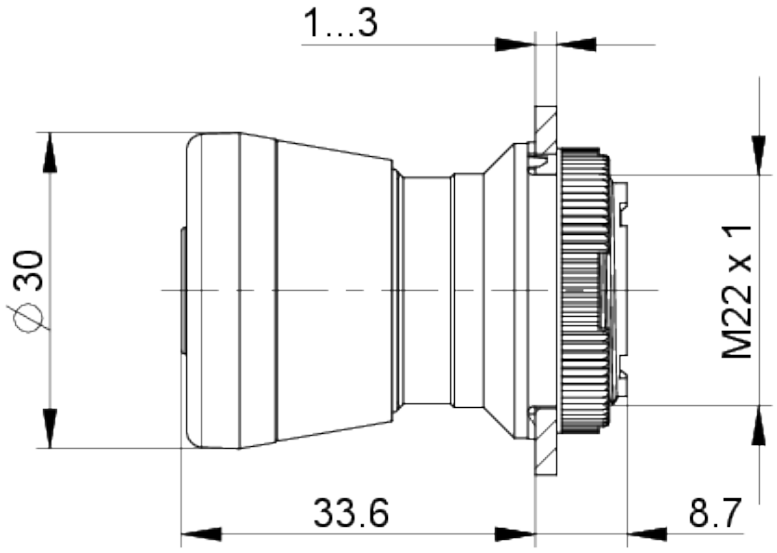


### System drawing

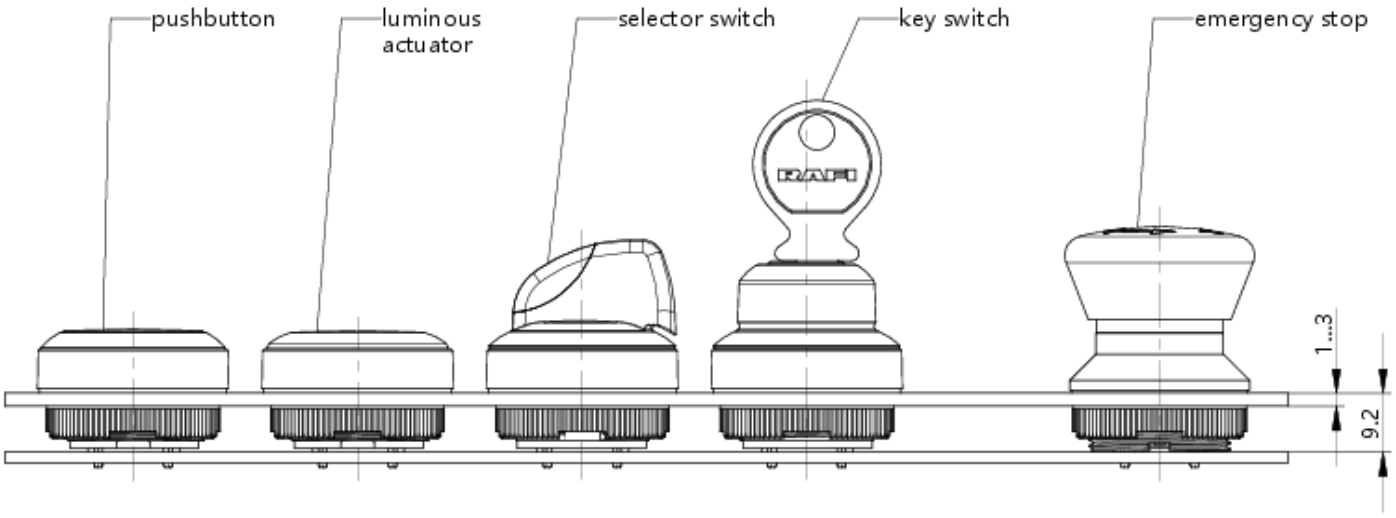


The information in this data sheet only contains general descriptions and / or performance features, which may not apply precisely as described to the respective application, and which my change due to further product enhancements. The technical data, illustrations and other information about our products are the mere results of individual technical testing. These descriptions and other product features are only binding if they expressly agreed upon at the time of the conclusion of a binding contract. In all other cases, we reserve the right to make technical changes as well as changes of availability. Pictures and other graphic illustrations are approximations only. All product names may be trademarks or brand names of the RAFI Group or any other sub-supplier of RAFI. The use of such by any third parties for their own purposes may infringe the rights of the respective entity holding those rights.


**RAFI GmbH & Co. KG**

Ravensburger Str. 128-134
88276 Berg / Ravensburg
Germany
www.rafi-group.com,
info.headquarters@rafi-group.com

Downloaded from Arrow.com.

## System drawing

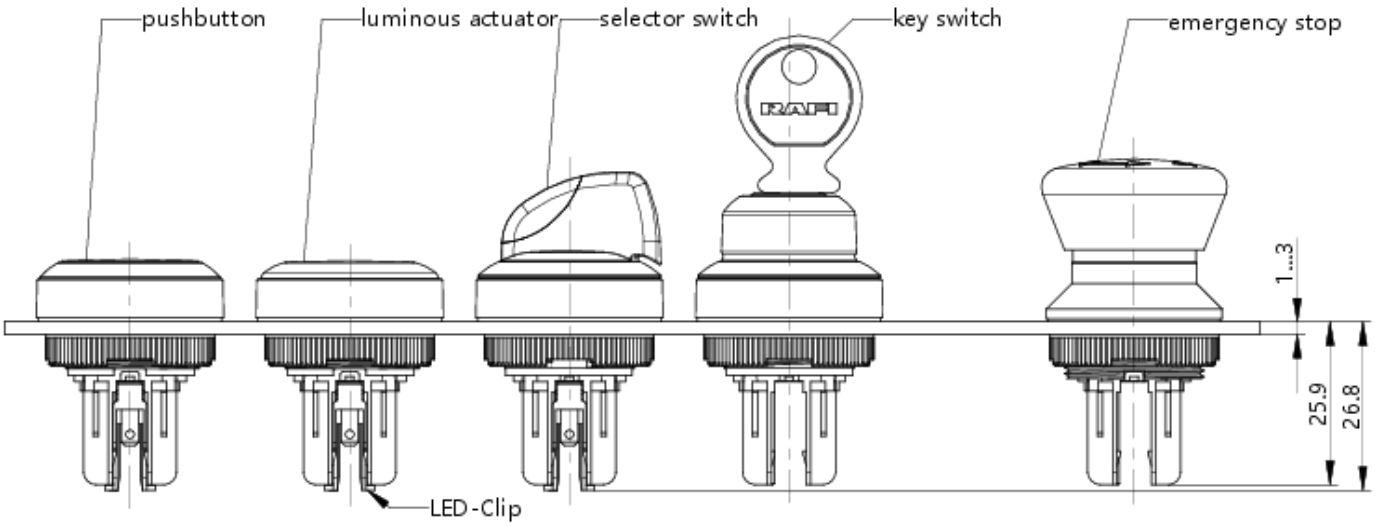


## Mounting hole drawing

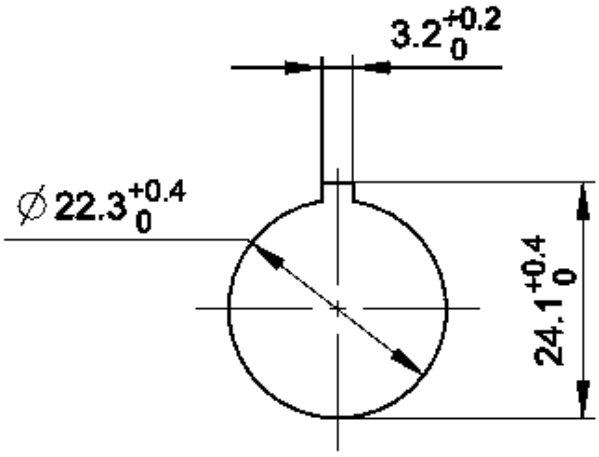


acc. to IEC 60947-5-1

The information in this data sheet only contains general descriptions and / or performance features, which may not apply precisely as described to the respective application, and which my change due to further product enhancements. The technical data, illustrations and other information about our products are the mere results of individual technical testing. These descriptions and other product features are only binding if they expressly agreed upon at the time of the conclusion of a binding contract. In all other cases, we reserve the right to make technical changes as well as changes of availability. Pictures and other graphic illustrations are approximations only. All product names may be trademarks or brand names of the RAFI Group or any other sub-supplier of RAFI. The use of such by any third parties for their own purposes may infringe the rights of the respective entity holding those rights.


**RAFI GmbH & Co. KG**

Ravensburger Str. 128-134
88276 Berg / Ravensburg
Germany
www.rafi-group.com,
info.headquarters@rafi-group.com

Downloaded from Arrow.com.

## front panel drawing

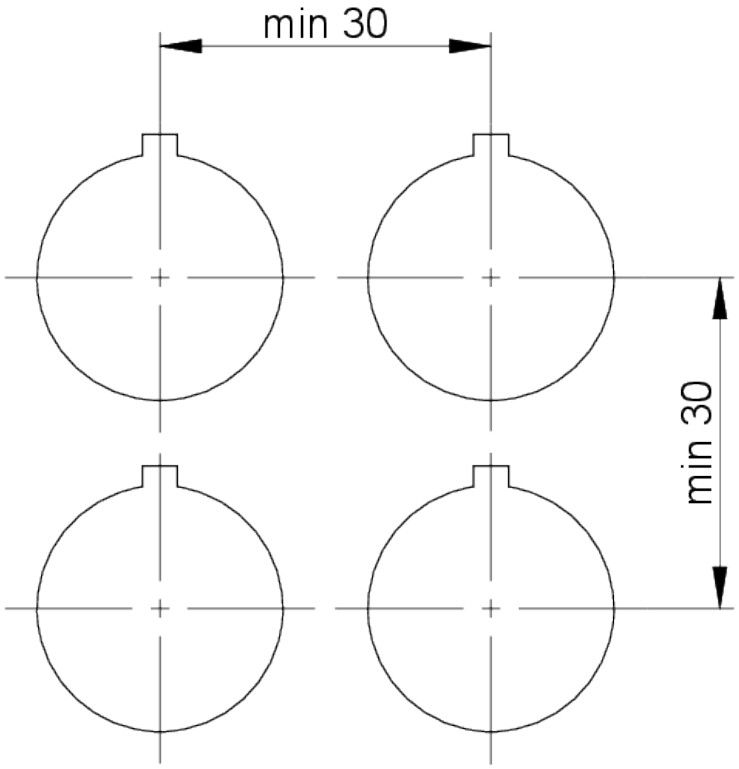


The information in this data sheet only contains general descriptions and / or performance features, which may not apply precisely as described to the respective application, and which my change due to further product enhancements. The technical data, illustrations and other information about our products are the mere results of individual technical testing. These descriptions and other product features are only binding if they expressly agreed upon at the time of the conclusion of a binding contract. In all other cases, we reserve the right to make technical changes as well as changes of availability. Pictures and other graphic illustrations are approximations only. All product names may be trademarks or brand names of the RAFI Group or any other sub-supplier of RAFI. The use of such by any third parties for their own purposes may infringe the rights of the respective entity holding those rights.


**RAFI GmbH & Co. KG**

Ravensburger Str. 128-134
88276 Berg / Ravensburg
Germany
www.rafi-group.com,
info.headquarters@rafi-group.com

Downloaded from Arrow.com.