| DASH NO | CABLES ACCOMODATED | A HEX | ASSEMBLE PER |
|---|---|---|---|
| -003 | RG-174, 316 | .178 | TAI-221 |
| -004 | RG-179, 187 | | |
| -005 | NORTHERN ELECTRIC DBL-SHLD RG-187 | .197 | |
| -006 | GC875GP1, GRUMMAN DBL-SHLD RG-188 | | |
| -007 | 275-3991, MICRODOT | .178 | |
| -008 | RG-195, -180 421-111, ESSEX | | |
| -009 | 8218, BELDEN 21-597, ESSEX YR23023, BELDEN | | |
| -011 | RG-58, RG-141, RG-303 | .213 | |
| -013 | RG-59 | .255 | |
| -013A | TCC-75-2 | | |
| -013B | RG-62 | | TAI-C118 |
| -014 | 8212, BELDEN | | TAI-221 |
| -015 | 730A, LUCENT | .290 | |
| -015A | RG-71 | | TAI-C118 |
| -016 | 724, LUCENT 8281, BELDEN | .324 | TAI-221 |
| -017 | RG-6 | .344 | |
| -018 | 9268, BELDEN | .255 | |
| -019 | 8279, BELDEN | | |
| -020 | 9248, BELDEN | .290 | |
| -022 | 88241,88269,BELDEN | .255 | TAI-C118 |
| -023 | 89108, BELDEN | | TAI-221 |
| -024 | 89120, BELDEN | .290 | |
| -025 | 734A, LUCENT | .255 | TAI-243 |
| -026 | 735A, LUCENT | .178 | |
| -026-X | | | |
| -027 | KS19224L2, LUCENT | | TAI-221 |
| -030 | 32448A, DRAKA | .324 | |
| -054 | 1725A/B AVAYA | .344 | TAI-231 |

DATA CONTAINED IN THIS DOCUMENT IS PROPRIETARY TO TROMPETER ELECTRONICS INC. AND SHALL NOT BE DISCLOSED, COPIED OR USED FOR PROCUMENT OR MANUFACTURE WITHOUT EXPRESS WRITTEN PERMISSION.

**REVISIONS**

| REV | DESCRIPTIONS | DATE | APPROVED |
|---|---|---|---|
| P | REVISED PER ECO 16946 | 8/5/09 | WMCx. |

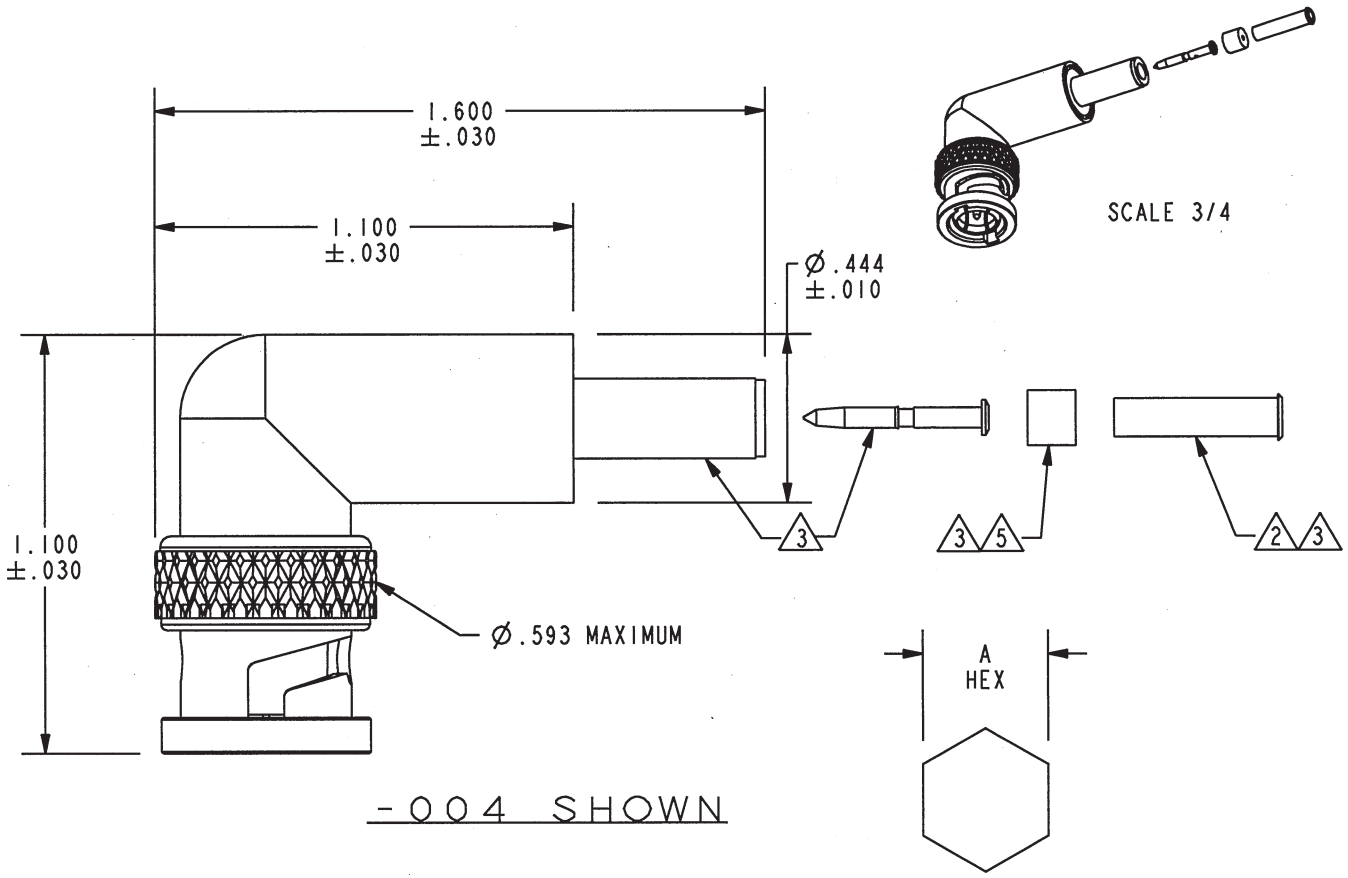


6. EXAMPLE OF COMPLETE MODEL NUMBER:
UPLR220 - 025
BASIC MODEL NUMBER — DASH NUMBER (CABLE GROUP)

5 CONTACT SUPPORT BUSHING REQUIRED -013B, -015A & -022 ONLY

4. RF COAXIAL 75Ω BNC FULL CRIMP RIGHT ANGLE CABLE PLUG

3 PIN, SLEEVE, CRIMP SLEEVE & CONTACT SUPPORT BUSHING ARE SUPPLIED LOOSE

2 SLEEVE REQUIRED ON -003 THRU -007 & -027 ONLY

1. FINISH TFS-IA (NICKEL)

NOTES: UNLESS OTHERWISE SPECIFIED.

**RED INDICATES ORIGINAL**

INTERPRET DRAWING PER MIL-STD-100. DIMENSIONS ARE IN INCHES AND INCLUDE FINISH THICKNESS UNLESS OTHERWISE SPECIFIED.

TOL: UNLESS SPECIFIED. .XX ± .02 .XXX ± .010 ANGLE ± 1°

TROMPETER RF connectivity — a cinch connectivity solutions brand

DRN L.M. 8-5-09
CHK M.J. 8-5-09
QUALITY
MANUF
APPROVED 8-5-09
PROJ FILE NO. 1-0504

MATERIAL:
FINISH:

TITLE: UPLR220

| SIZE | CAGE CODE | DRAWING NO. | REV. |
|---|---|---|---|
| A | 14949 | 1-0504 | P |

| NEXT ASSY | DO NOT SCALE DWG | SCALE 2/1 | DATE 3-11-94 | SHEET 1C |
|---|---|---|---|---|

Downloaded from Arrow.com.
Please read our datasheet & drawing disclaimer here.