Rev	AWO #	Description	Date	Appr
-		RELEASED	5/23/14	

APPROVED: _____

DATE: _____ TITLE: _____

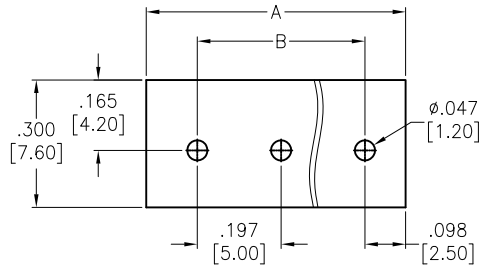

RECOMMENDED PCB LAYOUT

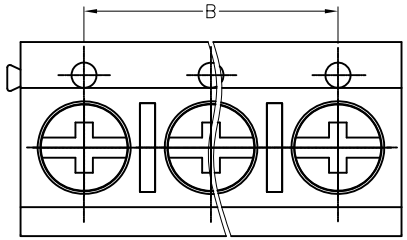

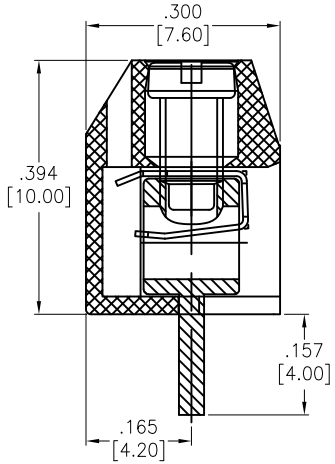

SECTION A–A

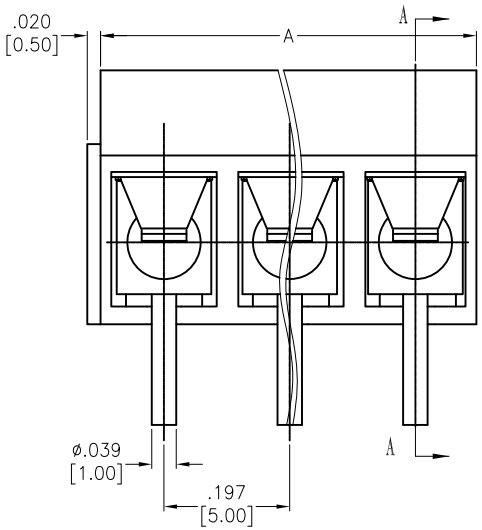

SPECIFICATIONS:

Material:
Insulator: PA66, rated UL 94V–0
Insulator color: Black
Screw: M2.5, Steel, Zinc plated.
Contact: Brass, Tin plated.
Shrapnel: Phosphor Bronze, Nickel plated

Electrical:
Operation voltage: 300 VAC Max
Current rating: 10 Amps Max
Contact resistance: 20 mohms max
Insulation resistance: 500 Mohms min @ 500 VDC
Withstanding voltage: 2,000 VAC for 1 minute

Mechanical:
Torque: 3.6Lb–In, 0.4N–m
Wire Range: 22–14AWG, 1.5mm²
Strip Length: 4.5–5mm

Environmental:
Operating temperature: –40°C to +120°C
Lead free, RoHS compliant.

RoHS COMPLIANT

Positions: 2 thru 24
A = .197 [5.00] x No. of Positions + .020 [0.50]
B = .197 [5.00] x No. of Spaces

UNLESS OTHERWISE SPECIFIED
ALL DIMENSIONS ARE INCHES [MM]
TOLERANCES: EXCEPT AS NOTED

INCHES		HOLES	
.X	± .10	Ø.X	±.10
.XX	± .020	Ø.XX	±.015
.XXX	± .015	Ø.XXX	±.010

APPROVALS		DATE
DRAWN	HR	5/23/14
CHECKED	SY	5/23/14
APPROVED		

ADAM TECH
909 Rahway Avenue, Union, NJ 07083
Phone: 908-687-5000 Fax: 908-687-5710

TITLE: EURO BLOCK, .197 [5.00] PITCH

SIZE	PART NO.	REV.
X	EBBA-XX-C-BK	-

REF: S00067C | SCALE: NTS | SHEET 1 OF 1

Downloaded from Arrow.com.