CA-628485-C43 SHEET 1 OF 3 REV. A

ELECTRICAL TEST TABLE (1)

DESCRIPTION	REQUIREMENT
PINOUT/CONTINUITY	PER WIRING TABLE
INSULATION RESISTANCE	500 VDC FOR 5 SEC. 200 MEGOHM MIN.

REVISIONS M

LTR	DESCRIPTION	DATE
A	INITIAL RELEASE	---

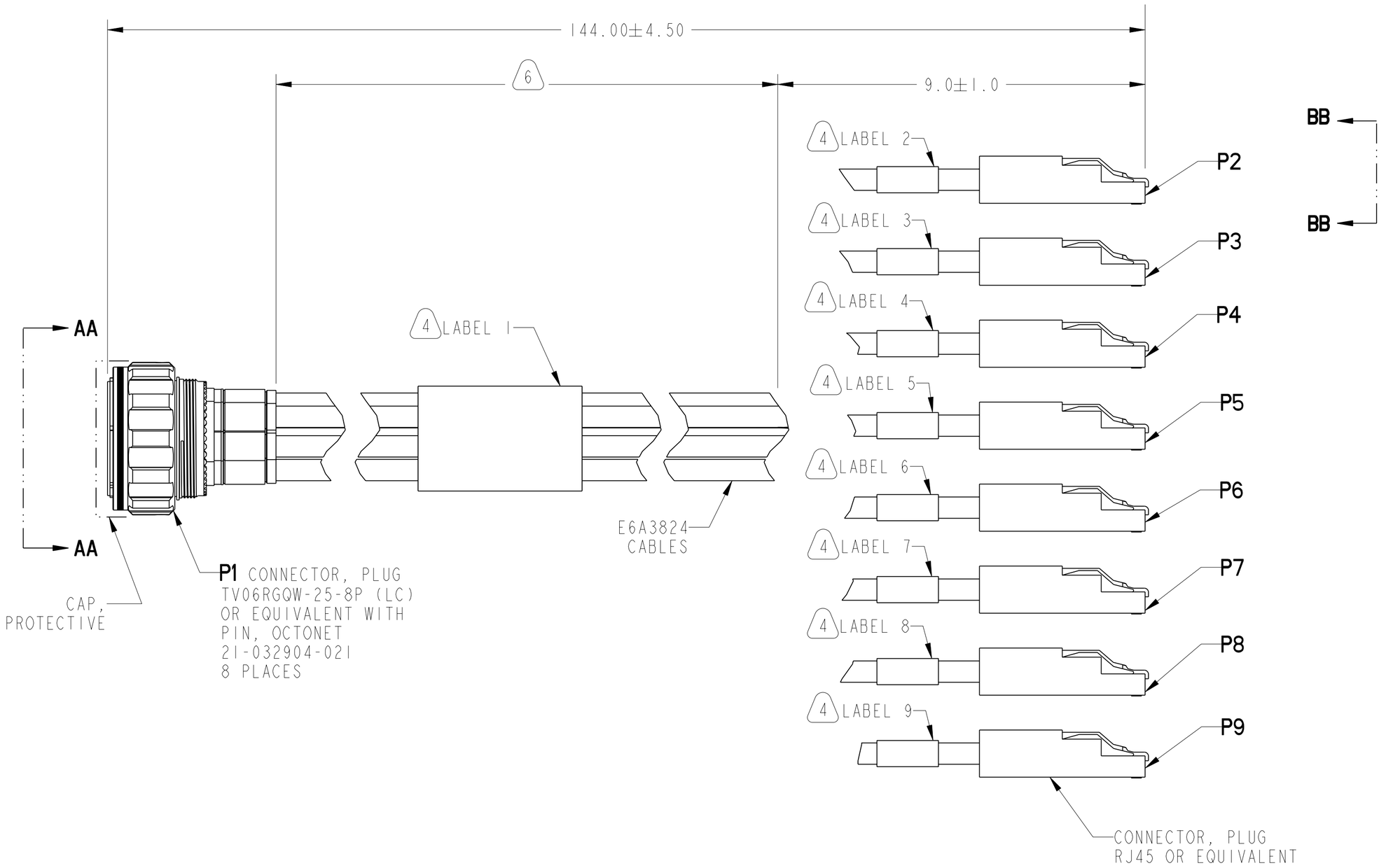

SEE SHEET 2

NOTES:

THE USE OF THIS DOCUMENT IS UNLIMITED. HOWEVER, DOCUMENTS REFERENCED HEREON MAY CONTAIN LIMITED RIGHTS DATA.

RELEASED / Nov . 29 2016, 3:23:05 PM

N/A

NEXT ASSEMBLY

PRO/ENGINEER INFORMATION
Pro/e Model Used: CA-628485-C43.ASSEM
Drawing Name: CA-628485-C43

UNLESS OTHERWISE SPECIFIED
LINEAR DIMENSIONS ARE IN INCHES
TOLERANCES:
.XXXX = ±.0005 ANGLES= ±2°
.XXX = ±.010
.XX = ±.03
.X = ±.1
DIM.& TOL. PER ASME Y14.5M;
DRM PER MIL-STD-31000;
OTHER Amphenol Stds. PER 9-3800
LEGENDS:
=FLAG NOTE CALL OUT
REFERENCE ONLY

SPECIFICATIONS
MATERIAL SPEC.
N/A
PROCESS SPEC.
SEE NOTE 3

POS	QTY	PART NUMBER	DESCRIPTION	NOTE

PARTS LIST

APPROVALS — DATE
PREPARED BY A. TUFAIL
ENGINEER IN CHARGE D. PHILLIPS
DESIGN MANAGER J. PAUL
DESIGN ACTIVITY GROUP C-1
07-Nov-16

THIRD ANGLE PROJECTION

AMPHENOL CORPORATION
40-60 DELAWARE AVENUE
SIDNEY, N.Y. 13838

TEST CABLE
TV06RGQW-25-8PL TO RJ45
OD CAD PLATED, 12 FT

SIZE	CAGE CODE	DOCUMENT NO.	REV.
C	77820	CA-628485-C43	A

SCALE: 1.0 REF. CA-628485-C10 SHEET 1 OF 3

DOCUMENT NO. CA-628485-C43 SHEET 1 OF 3 REV. A

DOCUMENT NO. CA-628485-C43 SHEET 1 OF 3 REV. A

Eng PDM Information For Reference Only

REVISION A VERSION 4

FORMAT: C-U_E-1

Downloaded from Arrow.com.

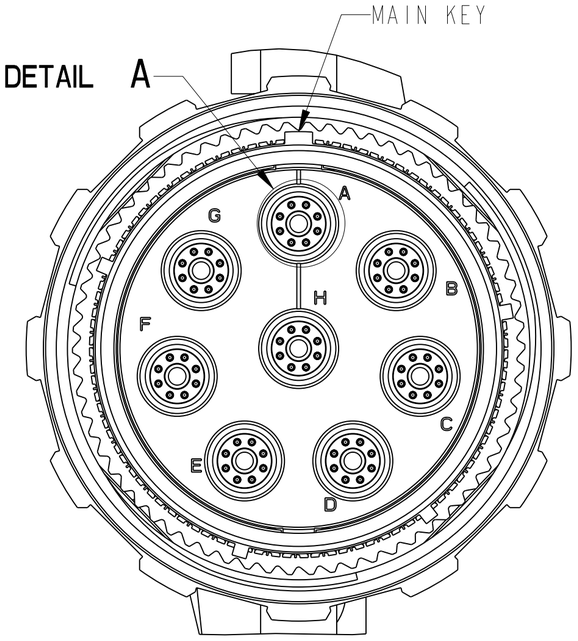

PARTIAL VIEW AT AA-AA
SCALE 2.500

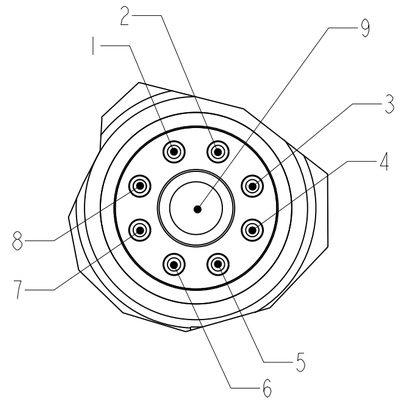

DETAIL A
CONTACT ID'S
SCALE 7.500

4 MARKING TABLE

LABEL ID	MARKING
LABEL 1	AMPHENOL CA-628485-C43 SERIALIZED DATE CODE (9-9172-3) & LOT NO.
LABEL 2	A
LABEL 3	B
LABEL 4	C
LABEL 5	D
LABEL 6	E
LABEL 7	F
LABEL 8	G
LABEL 9	H

7. CABLE ASSEMBLY SHALL BE SHIPPED IN ANTISTATIC BAG WITH DESICCANT.

6. INDICATED AREA SHALL BE SPOT TIED USING EITHER WIRE LACING OR ZIP TIES.

5. CABLE ASSEMBLIES SHALL BE WIRED IN ACCORDANCE WITH WIRING TABLE.

4. MARKING SHALL BE APPLIED WITH BLACK INK ON WHITE LABEL PER MARKING TABLE.

3. PROCESS SPEC:
   9-9172-3

2. MARK UNIT CONTAINER WITH "AMPHENOL", PART NUMBER SERIALIZED DATE CODE (9-9172-3) & LOT NO.
   EXAMPLE:
   AMPHENOL CA-628485-C43 1618005 161234567

1. CABLE SHALL BE TESTED PER ELECTRICAL TEST TABLE.

NOTES:

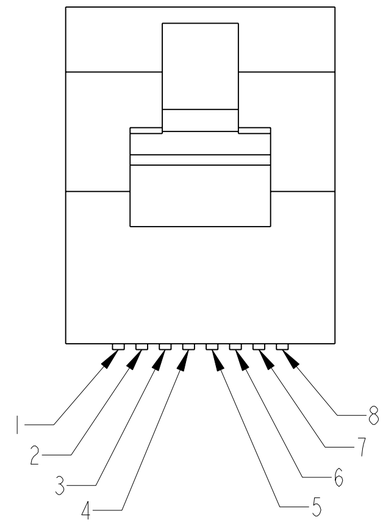

PARTIAL VIEW AT BB-BB
SCALE 5.000

THE USE OF THIS DOCUMENT IS UNLIMITED.
HOWEVER, DOCUMENTS REFERENCED HEREON
MAY CONTAIN LIMITED RIGHTS DATA.

RELEASED / Nov . 29 2016, 3:23:05 PM

DOCUMENT NO.	SHEET	REV.
CA-628485-C43	SHEET 2 OF 3	A

SIZE	CAGE CODE	DOCUMENT NO.	REV.
C	77820	CA-628485-C43	A
SCALE: 1.3	REF: CA-628485-C10	SHEET 2 OF 3	

CA-628485-C43 | SHEET 2 OF 3 | A

FORMAT: C-U_E-1

VERSION 4 | REVISION A | Eng PDM Information For Reference Only | REV. A | SHEET 2 OF 3 | DOCUMENT NO. CA-628485-C43

Downloaded from Arrow.com.

WIRING TABLE (5)

P1 CONNECTOR CAVITY ID	P2 CONNECTOR PIN ID	P3 CONNECTOR PIN ID	P4 CONNECTOR ID	P5 CONNECTOR ID
A:1	1	-	-	-
A:2	2	-	-	-
A:3	3	-	-	
A:4	6	-	-	-
A:5	4	-	-	-
A:6	5	-	-	-
A:7	7	-	-	-
A:8	8	-	-	-
B:1	-	1	-	-
B:2	-	2	-	-
B:3	-	3	-	-
B:4	-	6	-	-
B:5	-	4	-	-
B:6	-	5	-	-
B:7	-	7	-	-
B:8	-	8	-	-
C:1	-	-	1	-
C:2	-	-	2	-
C:3	-	-	3	-
C:4	-	-	6	-
C:5	-	-	4	-
C:6	-	-	5	
C:7	-	-	7	-
C:8	-	-	8	-
D:1	-	-	-	1
D:2	-	-	-	2
D:3	-	-	-	3
D:4	-	-	-	6
D:5	-	-	-	4
D:6	-	-	-	5
D:7	-	-	-	7
D:8	-	-	-	8
A:9 A: OUTER	OUTER	-	-	-
B:9 B: OUTER	-	OUTER	-	-
C:9 C: OUTER	-	-	OUTER	-
D:9 D: OUTER	-	-	-	OUTER

WIRING TABLE (CONTINUED) (5)

P1 CONNECTOR CAVITY ID	P6 CONNECTOR PIN ID	P7 CONNECTOR PIN ID	P8 CONNECTOR ID	P9 CONNECTOR ID
E:1	1	-	-	-
E:2	2	-	-	-
E:3	3	-	-	
E:4	6	-	-	-
E:5	4	-	-	-
E:6	5	-	-	-
E:7	7	-	-	-
E:8	8	-	-	-
F:1	-	1	-	-
F:2	-	2	-	-
F:3	-	3	-	-
F:4	-	6	-	-
F:5	-	4	-	-
F:6	-	5	-	-
F:7	-	7	-	-
F:8	-	8	-	-
G:1	-	-	1	-
G:2	-	-	2	-
G:3	-	-	3	-
G:4	-	-	6	-
G:5	-	-	4	-
G:6	-	-	5	
G:7	-	-	7	-
G:8	-	-	8	-
H:1	-	-	-	1
H:2	-	-	-	2
H:3	-	-	-	3
H:4	-	-	-	6
H:5	-	-	-	4
H:6	-	-	-	5
H:7	-	-	-	7
H:8	-	-	-	8
E:9 E: OUTER	OUTER	-	-	-
F:9 F: OUTER	-	OUTER	-	-
G:9 G: OUTER	-	-	OUTER	-
H:9 H: OUTER	-	-	-	OUTER

SEE SHEET 2

NOTES:

THE USE OF THIS DOCUMENT IS UNLIMITED.
HOWEVER, DOCUMENTS REFERENCED HEREON
MAY CONTAIN LIMITED RIGHTS DATA.

RELEASED / Nov . 29 2016, 3:23:05 PM

DOCUMENT NO.	SHEET	REV.
CA-628485-C43	SHEET 3 OF 3	A

SIZE	CAGE CODE	DOCUMENT NO.	REV.
C	77820	CA-628485-C43	A
SCALE: 1.0	REF: CA-628485-C10	SHEET 3 OF 3	

DOCUMENT NO. CA-628485-C43
REV. A
SHEET 3 OF 3
Eng PDM Information For Reference Only
REVISION A
VERSION 4
FORMAT: C-U.E-1

Downloaded from Arrow.com.