FO-55112-B

HONEYWELL PART NUMBER
26ET24-3
FAA-PMA 9

REV	DOCUMENT	CHANGED BY	CHECK
11	0006860	CVS 04AUG04	AK

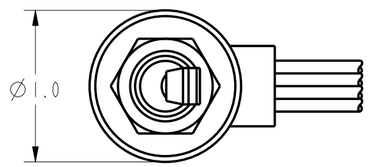

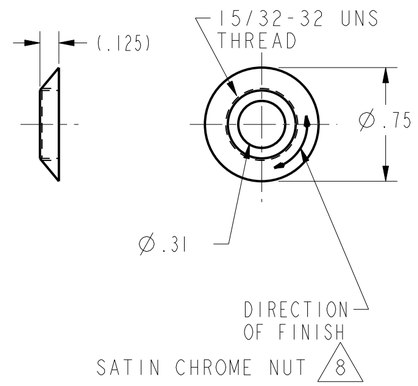

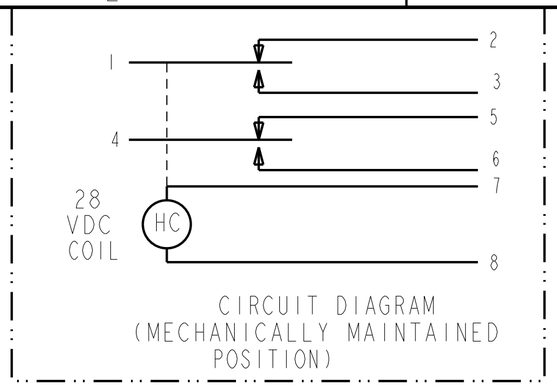

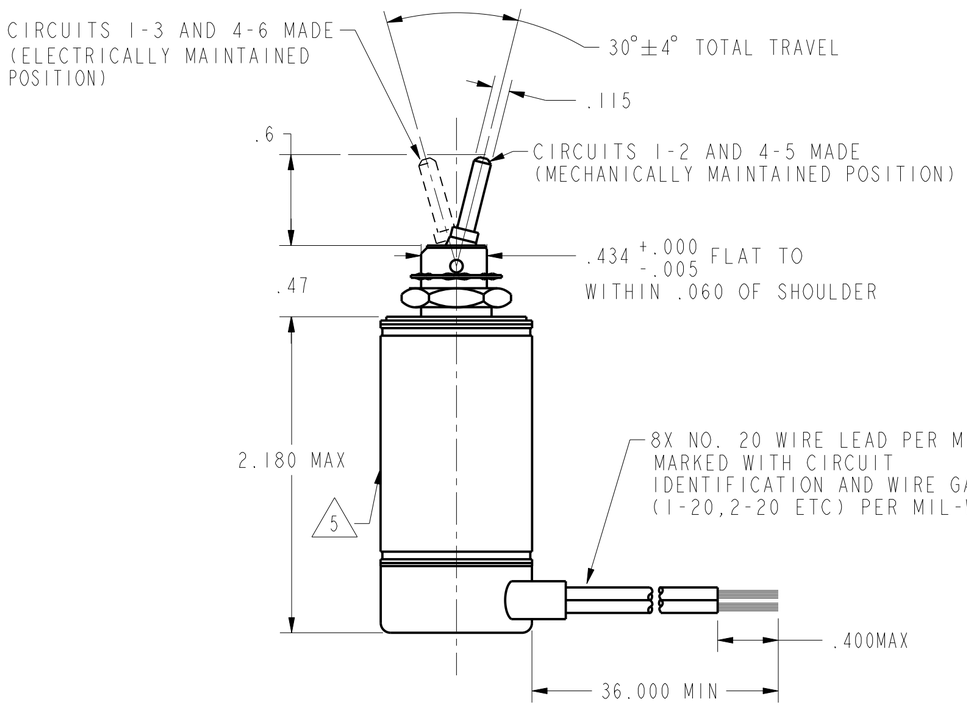

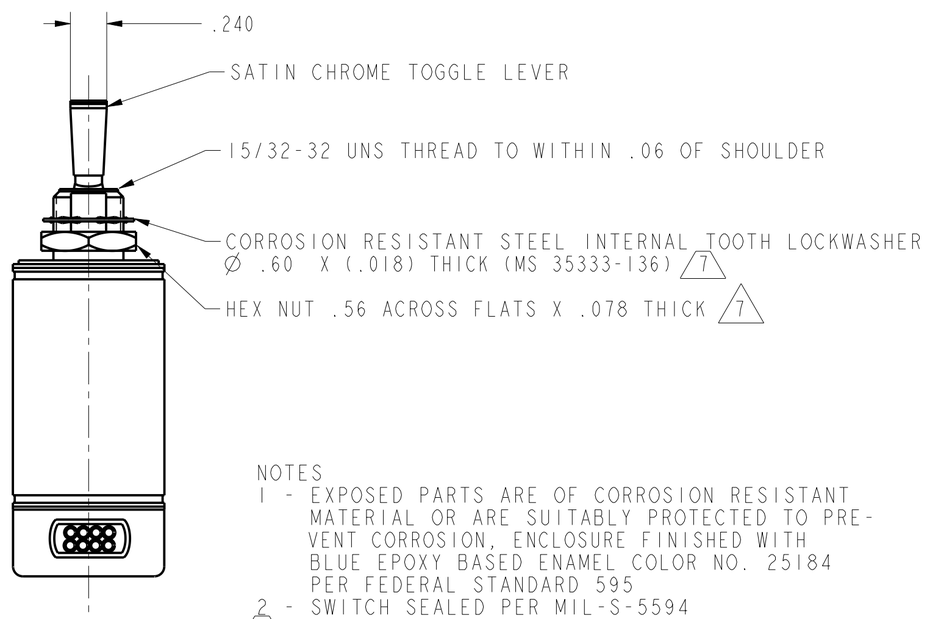

NOTES

1 - EXPOSED PARTS ARE OF CORROSION RESISTANT MATERIAL OR ARE SUITABLY PROTECTED TO PREVENT CORROSION, ENCLOSURE FINISHED WITH BLUE EPOXY BASED ENAMEL COLOR NO. 25184 PER FEDERAL STANDARD 595

2 - SWITCH SEALED PER MIL-S-5594

3 HOLD IN VOLTAGE: THE MINIMUM SPECIFIED VOLTAGE AT WHICH THE LEVER WILL REMAIN ACTUATED. HOLD IN MAY OCCUR AT A LOWER VALUE. DROP OUT VOLTAGE: THE VOLTAGE RANGE IN WHICH THE LEVER WILL BE RELEASED

4 - CIRCUITS CAN BE TRANSFERRED MANUALLY. ENERGIZING THE COIL WILL NOT CAUSE TRANSFER OF CIRCUITS

5 CIRCUIT IDENTIFICATION, CATALOG LISTING, FSCM CODE, MICRO SWITCH, FAA-PMA AND DATE CODE IS SHOWN ON SWITCH

6 - SWITCHES DO NOT NECESSARILY OPERATE SIMULTANEOUSLY

7 HARDWARE MAY BE FURNISHED UNASSEMBLED PER MIL-S-5594

8 FURNISHED UNASSEMBLED

9 - FOR MANUFACTURING DETAIL SEE ASSEMBLY DRAWING 26ET24-3 FOR FAA-PMA

CHARACTERISTICS 3	
STEADY STATE LIMITS	20-29 VDC
HOLD IN	15 VDC
DROP OUT	0-15 VDC
OVERRIDE FORCE AT 29VDC	10 LB MAX
OPERATING FORCE	7 LBS MAX
COIL RESISTANCE	220 OHM MIN

SOLENOID RATING AT 20°C

ELECTRICAL DATA

CONTACT ARRANGEMENT 2X S P D T

VOLTAGE	RATINGS IN AMPHERES							
	SEA LEVEL				65,000 FT			
	INRUSH	RES	IND	MOTOR	INRUSH	RES	IND	MOTOR
28 VOLTS DC		4	2.5	4		4	2.0	4

DESIGN UNITS: INCH
TOLERANCES UNLESS NOTED:

NO PLACE	X	±	0.040
ONE PLACE	.X	±	.030
TWO PLACE	.XX	±	.015
THREE PLACE	.XXX	±	.005
FOUR PLACE	.XXXX	±	0.0001
ANGLES	X	±	0

THIRD ANGLE PROJECTION

DRAWN	GJW	30OCT00
CHECK	SAV	30OCT00

THIS DRAWING COVERS A PROPRIETARY ITEM AND IS THE PROPERTY OF HONEYWELL. THIS DRAWING IS NOT TO BE COPIED OR USED WITHOUT THE PERMISSION OF HONEYWELL.

INTERPRET PER ANSI Y14.5M 1982 OTHER HONEYWELL ENGINEERING STANDARDS MAY APPLY

Pro/ENGINEER 2D

Honeywell

TITLE SWITCH-TOGGLE (MAGNETIC HOLD-IN)

SIZE	TYPE	DRAWING NAME	REV
C	1	26ET24-3	11

SCALE FULL | WEIGHT: 8.2 OZ MAX | SHEET 1 OF 1

Downloaded from Arrow.com.