TS

D-Sub connectors - Stamped and Formed Contacts

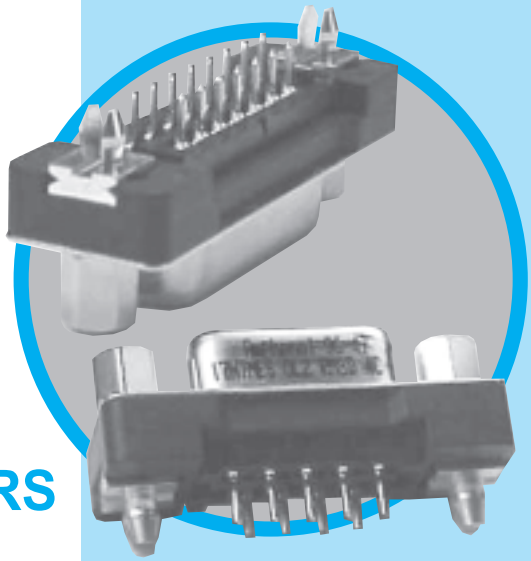

STRAIGHT PCB TERMINATION ONE METAL SHELL CONNECTORS

CHARACTERISTICS

Specifications

• Connectors according to MIL C24308

Materials and Platings	
Shells	Steel with nickel plating
Insulator	Glass-filled thermoplastic, UL 94V-0
Contacts	Copper alloy, selective gold plating
Boardlock	Brass with nickel plating
Screwlock	Brass with nickel plating

Electrical Data	
Current rating	5A
Voltage rating	600V AC/rms 50Hz
Withstanding voltage	1000V AC/rms 50Hz for one minute
Insulation resistance	5000MΩ
Contact resistance	10mΩ max

Climatic Data	
Operating temperature	-55°C to +125°C

Mechanical Data

Mating and unmating force
Unit: kg (lb)

No. of Cts	Mate (max)	Unmate (min)
9	3.05 (6.74)	0.36 (0.79)
15	5.09 (11.24)	0.46 (1.01)
25	8.44 (18.66)	0.81 (1.8)
37	12.51 (27.65)	1.1 (2.47)

Standard plating thicknesses
• gold flash
• 0.4µm (15µ") gold
• 0.76 µm (30µ") gold

DESCRIPTION

The one shell D-sub Amphenol series features, stamped and formed contacts.

This series gives you Amphenol's high standards of quality and reliability to meet all of your commercial requirements

Economical straight PCB, one shell connectors

APPLICATIONS

• Industrial
• Telecom
• Any industry standard I / O connections

TS / E10

Amphenol RoHS Compliant EU 2002/95/EC

Amphenol

Downloaded from Arrow.com.

Shell Size Dimensions

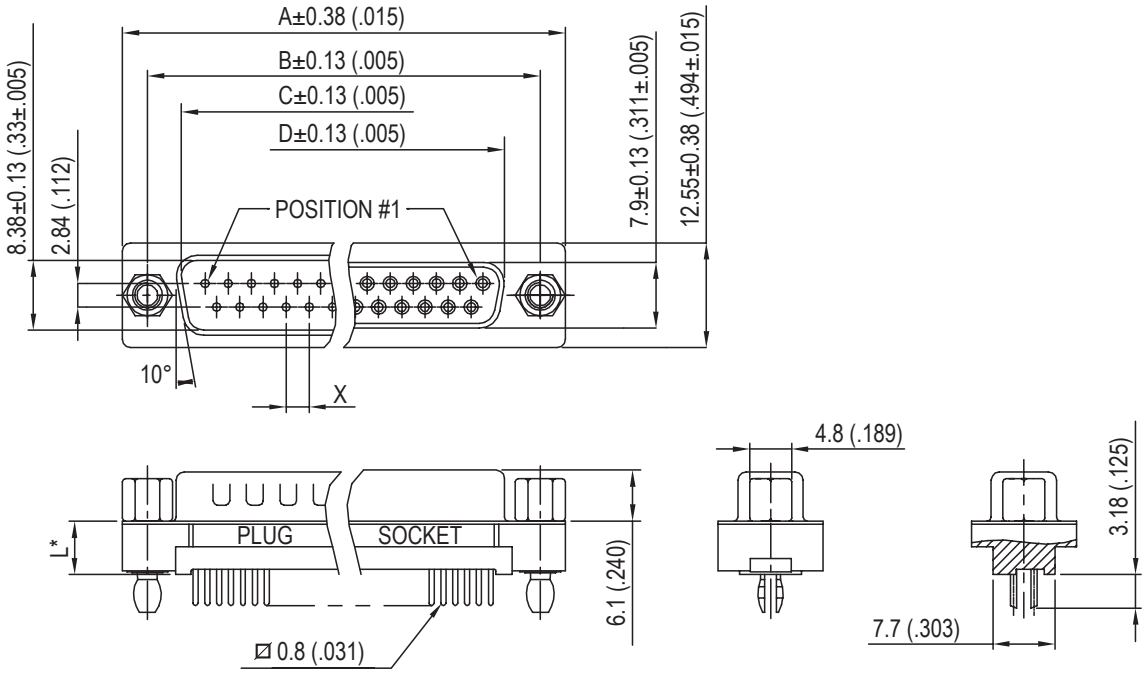

***see chart "how to order"**

RECOMMENDED P.C.B. LAYOUT

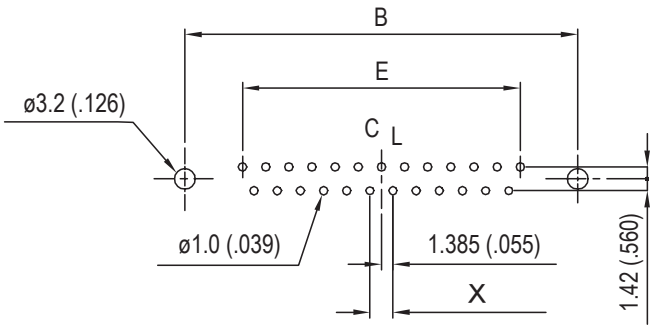

Nb OF CONTACTS	DIMENSIONS mm (inch)					
	A	B	C	D	E	X
9	30.84 (1.21)	24.99 (.984)	16.92 (.666)	16.26 (.640)	11.08 (.436)	2.74
15	39.24 (1.54)	33.32 (1.31)	25.25 (.994)	24.56 (.967)	19.39 (.763)	2.74
25	53.04 (2.09)	47.04 (1.85)	38.96 (1.53)	38.30 (1.51)	33.24 (1.31)	2.77
37	69.34 (2.73)	63.50 (2.50)	55.42 (2.18)	54.76 (2.16)	49.86 (1.96)	2.77

Downloaded from Arrow.com.

Panel mounting option

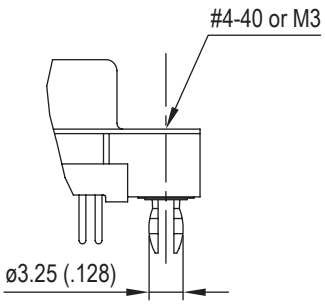

Boardlock with Threaded Insert
RM5

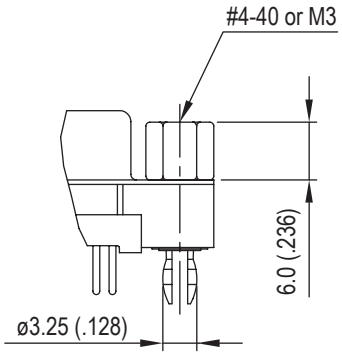

Boardlock with Front Screwlock
RM8

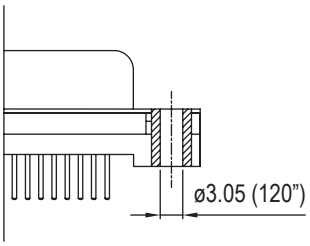

Clear Hole

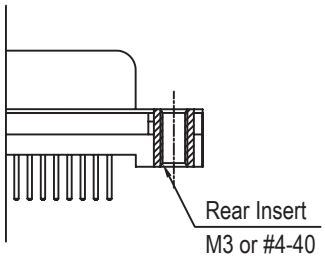

Rear Insert Threaded

How to order

L ... TS C309

RoHS Compliant

gold flash	77: tinned shell for receptable 717: tinned shell + dimples for plug
0.4µm (15µ")	177: tinned shell for receptable 777: tinned shell + dimples for plug

shell size: E, A, B, C

mounting options:
Blank = Clear Hole
G = M3
H = 4.40
H,G must also be used to specify the threading of RM5 or RM8 grounding tabs

configuration: 09, 15, 25, 37

plating option:
valid only for
0.76µm (30µ")

part numbers to be written as follow:

77.....C309
or
717.....C309

board mounting options:
Blank = Clear Hole
RM5 = retention clip
RM8 = retention clip
+front screwlock

termination:
OL2 : L = 6.02mm (.237")
OL2C : L = 11.48mm (.452")

contact type:
P = pin
S = socket

For special request, please consult factory

Amphenol

Downloaded from Arrow.com.

NOTES

Memo

Do not hesitate to contact us for further information

Amphenol

Amphenol IT & Communication Products
Block A3/A4, The 4th Industrial District of
Industrial Headquarters, Dong Keng Road
Gong Ming Town, Shen Zhen China
Fax:+86(0)755 2754 9955

Technical Support
Tel:+86(0)755 2717 7945
Info-dsub@amphenol.com.cn
http://www.dsubconnector.com

The information given in this document are as a guideline only. We reserve the right to modify our products in any way we deem necessary. Any duplication is prohibited, unless approved in writing.

Downloaded from Arrow.com.