Bluetooth ® low energy Module

Bluetooth® 5.4 low energy

EB5340BA1

Data Sheet

By purchase of any products described in this document, the customer is deemed to understand and accept contents of this document.

The ***Bluetooth***® word mark and logos are owned by the ***Bluetooth*** SIG, Inc. and any use of such marks by KAGA FEI Co., Ltd. is under license.

Copyright 2024 KAGA FEI Co., Ltd.

Downloaded from Arrow.com.

Contents

1. Document constituent list **3**
2. General Items **4**
2.1. Scope 4
2.2. Description 4
3. Absolute maximum ratings **10**
4. Electrical characteristics **11**
4.1. Recommendation operating range 11
4.2. DC Specifications 11
4.3. RF Specifications 12
5. Circuit Schematic **13**
5.1. Block Diagram 13
5.2. Reference Circuits 14
5.2.1. Normal voltage mode 15
5.2.2. High voltage mode 15
5.2.3. Other 16
6. Outline/ Appearance **17**
7. Pin Layout **18**
8. Handling Precaution **20**
8.1. Environment conditions for use and storage 20
8.2. Conditions for handling of products 20
9. Packaging Specification **22**
9.1. Packaging Specification 22
9.2. Tape specification 23
9.3. Reel specification 24
9.4. Taping performance 25
10. Antenna application note **26**
10.1. Recommended module mounting example 26
10.2. Other module mounting examples 27
10.3. Placement of resin or plastic parts 27
10.4. Directional characteristics example (when mounted on evaluation board) 28
About this Application Note 28
11. Design guide **29**
11.1. Battery operation 29
11.2. Pattern Design Guide 29
11.2.1. Power Supply System 29
11.2.2. GND Pattern 29
Precautions **30**

Copyright 2024 KAGA FEI Co., Ltd.

Downloaded from Arrow.com.

1.Document constituent list

Control name	Control No.	Document Page
General Items	KM-AG-A223003	1/6 - 6/6
Absolute maximum ratings	KM-AM-A223003	1/1
Electrical characteristics	KM-AE-A223003	1/2 - 2/2
Circuit schematic	KM-MC-A223003	1/4 – 4/4
Outline / Appearance	KM-AD-A223003	1/1
Pin Layout	KM-BA-A223003	1/2 - 2/2
Handling Precaution	MQ-H-001	1/2 - 2/2
Packaging Specification	KM-BB-A223003	1/4 - 4/4
Antenna application note	-	1/3 - 3/3
Design guide	-	1/1
Precautions	MQ-P-001	1/1

Revision History

08-Aug. 2023 > Ver.1.0 Release
14-Sep. 2023 > Ver.1.1 Update
13-Mar. 2024 > Ver.1.2 Update

Copyright 2024 KAGA FEI Co., Ltd.

Downloaded from Arrow.com.

2.General Items

2.1.Scope

This specification (“Specification”) applies to the hybrid IC “EB5340BA1”,
Bluetooth® 5.4 low energy modules (“Product”) manufactured by KAGA FEI Co., Ltd. (“KAGA FEI”)

2.2.Description

a) User Code : EB5340BA1…nRF5340-QKAA-R
MODEL : EB5340
* User Code may be changed for mass production or other cases.
Note: Please use the Part number (EB5340BA1) to order this product

EB5340BA1 is provided from the factory with access port protection.
Please refer to the following documents for more details.
・Firmware Writing Manual

b) Chip : Nordic nRF5340
(Application core: 1MB Flash, 512KB RAM / Network core: 256KB Flash, 64KB RAM)

c) Function : Radio frequency transceiver Module. Bluetooth®5.4 conformity.

d) Application : IoT devices, Health & Fitness Equipment, Sensor, Toys

e) Structure : Hybrid IC loaded with silicon monolithic semiconductor
Regarding the containment of hazardous substance in this Product,
it conforms to RoHS Directive.

f) Outline : 10.0 x 15.4 x 2.0 mm
63-pin Land Grid Array

g) Marking : Part Number, Lot Number, Radio Law ID Number(Japan：MIC, USA：FCC , Canada：ISED) and manufacturer on Shielding Case

h) Country of origin : Japan or Thailand

i) Packaging : Packaging method: Tape & reel + aluminum moisture barrier bag
Packaging unit: 1000
* The samples may have different packing specification.

Copyright 2024 KAGA FEI Co., Ltd.

Downloaded from Arrow.com.

j) Notes:

a. Limitation of Warranty

1) KAGA FEI provides warranties only if the Product is operated under the condition set forth in this Specification. Please note that KAGA FEI shall not be liable for any defect and/or malfunction arising from use of the Product under the terms and conditions other than the operating conditions hereof. In addition, when this Product is used under environmental conditions such as over voltage which is not guaranteed, it may be destroyed in short mode. To ensure the security of customer's product, please add an extra fuse or/and a protection circuit for over voltage.
2) This Product is designed for use in products which comply with Bluetooth® Specifications. KAGA FEI disclaims and is not responsible for any liability concerning infringement by this Product under any intellectual property right owned by third party in case the customer uses this Product in any product which does not comply with Bluetooth® Specifications (the "non-complying products"). Furthermore, KAGA FEI warrants only that this Product complies with this Specification and does not grant any other warranty including warranty for application of the non-complying products.
3) In some cases, KAGA FEI may use replacements as component parts of Products. Such replacement shall apply only to component part of Products, which KAGA FEI deems it possible to replace or substitute according to (i) Scope of Warranty provided in this specification (e.g. Electric Characteristics, Outline, dimension, Conditions of Use, Reliability Tests, Official Standard (Type Approvals etc.)) and (ii) Quality of Products. KAGA FEI also ensures traceability of such replacement on production lot basis.

b. Instruction for Use (CAUTION)

1) This Product is not designed to be radiation-resistant. Please do not expose Product to radiation.
2) Communication between this Product and other might not be established nor maintained depending upon radio environment or operating condition of this Product and other products with wireless technology.
3) This Product operates in the unlicensed ISM band at 2.4GHz. In case this Product is used around the other wireless devices which operate in same frequency band of this Product, there is a possibility that interference occurs between this Product and such other devices. If such interference occurs, please stop the operation of other devices or relocate this Product before using this Product or do not use this Product around the other wireless devices.
4) This Product mentioned in this Specification is manufactured for use in Health & Fitness Equipment, Sensor, Toys. Before using this Product in any special equipment (such as medical equipment, space equipment, aircraft, disaster prevention equipment), where higher safety and reliability are duly required, the applicability and suitability of this Product must be fully evaluated by the customer at its sole risk to ensure correct and safety operation of those special equipments. Also, evaluation of the safety function of this Product even for use in general electronics equipment shall be thoroughly made and when necessary, a protective circuit shall be added in design stage, all at the customer's sole risk.

Copyright 2024 KAGA FEI Co., Ltd.

Downloaded from Arrow.com.

5) Japan Regulatory Information

This module is approved with the specific antenna on this module. Please ensure that your product can also bear a label with the following information. If the product is so small that it is not practicable to place the label, you can also place it in the instruction manual and package. The mark diameter shall be easily legible without using a device such as light microscopes.

R 005-103285

It is recommended to include the following sentence in the user manual of your product:
This product installs a radio system which has been approved as a radio station in a low power data communication system based on the Radio Law.
EB5340: 005-103285

6) Canada Regulatory Information

The following information must be indicated on the host device of this module;

a) This device complies with Innovation, Science and Economic Development Canada's applicable licence-exempt RSSs. Operation is subject to the following two conditions:
(1) This device may not cause interference; and
(2) This device must accept any interference, including interference that may cause undesired operation of the device.

Le présent appareil est conforme aux CNR d'Innovation, Sciences et Développement économique Canada applicables aux appareils radio exempts de licence. L'exploitation est autorisée aux deux conditions suivantes:
1) l'appareil ne doit pas produire de brouillage;
2) l'utilisateur de l'appareil doit accepter tout brouillage radioélectrique subi, même si le brouillage est susceptible d'en compromettre le fonctionnement.

b) This product is certified as type of the portable device with Innovation, Science and Economic Development Canada Rules. To maintain compliance with RF Exposure requirement, please use within specification of this product.

Ce produit est certifié comme type de l'appareil portable avec Règles de Innovation, Sciences et Développement économique Canada. Pour maintenir l'acquiescement avec exigence Exposition de RF, veuillez utiliser dans spécification de ce produit.

c) Please notify certified ID on your product.
Veuillez indiquer le numéro d'identification certifié sur votre produit.
-Contains Transmitter module IC: 28568-EB5340
-Contains IC: 28568-EB5340

d) Please indicate your product name at any location on the exterior of the host product or product packaging or product literature, which shall be available with the host product or online.

Copyright 2024 KAGA FEI Co., Ltd.

Downloaded from Arrow.com.

e) Please include the following statements in rectangle on the user manual of the host device of this module;

> This device complies with Innovation, Science and Economic Development Canada's applicable license-exempt RSSs. Operation is subject to the following two conditions:
> (1) This device may not cause interference.
> (2) This device must accept any interference, including interference that may cause undesired operation of the device.

> Le présent appareil est conforme aux CNR d'Innovation, Sciences et Développement économique Canada applicables aux appareils radio exempts de licence. L'exploitation est autorisée aux deux conditions suivantes :
> 1) l'appareil ne doit pas produire de brouillage;
> 2) l'utilisateur de l'appareil doit accepter tout brouillage radioélectrique subi, même si le brouillage est susceptible d' en compromettre le fonctionnement.

7) FCC Regulatory Information

a) This device complies with part 15 of the FCC Rules.
-Part 15 Subpart C

b) The following statement shall be indicated on the host device or the user manual of the host device; Operation is subject to the following two conditions:
(1) This device may not cause harmful interference, and
(2) this device must accept any interference received, including interference that may cause undesired operation.

c) Please notify certified ID by either one of the following method on your product.
-Contains Transmitter Module FCC ID: 2A6NFEB5340
-Contains FCC ID: 2A6NFEB5340

d) The following statement shall be indicated in the user manual of the host device;
CAUTION: Changes or modifications not expressly approved by the party responsible for compliance could void the use's authority to operate the equipment.

e) The modular transmitter is only FCC authorized for the specific rule parts (Part 15 Subpart C) listed on the grant, and the host product manufacturer is responsible for compliance to any other FCC rules that apply to the host not covered by the modular transmitter grant of certification. The final host product still requires Part 15 Subpart B compliance testing with the modular transmitter installed.

f) This product is certified as type of the portable device with FCC Rules. To maintain compliance with RF Exposure requirement, please use within specification of this product.

g) The following statement shall be indicated in the user manual of the host device; The antenna used for this transmitter must not be co-located or operating in conjunction with any other antenna or transmitter.

h) The module installer shall integrate the module within the range (including output power) under which the module is certified, by means of application software depending on the circumstances. The module installer must follow the integration instructions provided by Kaga FEI and ensure that the end product complies with the FCC requirements. Any end user cannot change the output power. The test software is developed by Kaga FEI, and during regulatory testing the output power is set to maximum power.

i) Co-location of this module with other transmitters that operate simultaneously are required to be evaluated using the FCC multi transmitter procedures. When installing this module to your final devices, please make sure to carry out all the necessary evaluations according to the applicable guidelines like follows:
-for RF exposure: KDB 447498, KDB 996369 and any other relevant guidelines
-for EMC: KDB 996369 D04 and any other relevant guidelines

Copyright 2024 KAGA FEI Co., Ltd.

Downloaded from Arrow.com.

j) When you install this module to your final devices, please ensure that your final composite product complies with the applicable FCC rules in reference to a guidance in KDB 996369.

k) Antenna List

This module is approved along with the following antenna.
You cannot use any antennas other than the listed one because it deviates from the accredited conditions.

Manufacturer	KAGA FEI
Part No.	N/A (Printed on PCB) Dimensions 9.6mm x 3.8mm
Antenna Type	Monopole
Maximum Antenna Gain	-0.2dBi

l) Please include the following statements in rectangle on the user manual of the host device of this module;

This device complies with part 15 of the FCC Rules. Operation is subject to the following two conditions: (1) This device may not cause harmful interference, and (2) this device must accept any interference received, including interference that may cause undesired operation.

FCC CAUTION: Changes or modifications not expressly approved by the party responsible for compliance could void the user's authority to operate the equipment.

The antenna used for this transmitter must not be co-located or operating in conjunction with any other antenna or transmitter.

This product is certified as type of the portable device with FCC Rules. To maintain compliance with RF Exposure requirement, please use within specification of this product.

8) CE Regulatory Information

a) When your end product installs this module, it is required to proceed additional certification processes before placing on the market in EU member states to make your products fully comply with relative EU standards.

b) KAGA FEI can provide you the test reports of conducted measurement portion for the radio module.You can utilize the test reports for the certification processes of you end product as it requires radio testing.

c. Term of Support

1) In the case that customer requests KAGA FEI to customize the hardware of this Product in order to meet such customer's specific needs, KAGA FEI will make commercially reasonable effort to modify such hardware or software at customer's expense; provide however, the customer is kindly requested to agrees it doesn't mean that KAGA FEI has obligations to do so even in the case it is technically difficult for KAGA FEI.

2) Any failure arising out of this Product will be examined by KAGA FEI regardless of before or after mass production. Customer agrees that once such failure is turned out not to be responsible for KAGA FEI after aforesaid examination, some of the technical support shall be conducted by KAGA FEI at customer's expense; provided however, exact cost of this technical support can be agreed through the negotiation by the parties.

Copyright 2024 KAGA FEI Co., Ltd.

Downloaded from Arrow.com.

3) Do not alter hardware and/or software of this Product. Please note that KAGA FEI shall not be liable for any problem if it is caused by customer's alteration of Hardware without KAGA FEI's prior approvals.
4) KAGA FEI does not guarantee functions and performances which depend on the customer's firmware. KAGA FEI does not assume liabilities for defects and failures (i) in functions, performances and quality of the Customer's product incorporating the Products and (ii) which may occur as the Product is incorporated in the Customer's product.

d. Caution for Export Control

This Product may be subject to governmental approvals, consents, licenses, authorizations, declarations, filings, and registrations for export or re-export of the Product, required by Japanese Foreign Exchange and Foreign Trade Law (including related laws and regulations) and/or any other country's applicable laws or regulations related to export control.

In case you will export or re-export this Product, you are strongly recommended to check and confirm, before exporting or re-exporting, necessary procedures for export or re-export of this Product which is required by applicable laws and regulations, and if necessary, you have to obtain necessary and appropriate approvals or licenses from governmental authority at your own risk and expense.

e. Term of Warranty

KAGA FEI warrants only that this Product is in conformity with this Specification for one year after purchase and shall in no event give any other warranty.

f. Items of the Specification

1) Any question arising from the Specification shall be solved in good faith through mutual discussion by the parties hereof.
2) The language of this "General items" is Japanese and this "General items" shall be interpreted by Japanese Any copies of translation is a reference purpose only and is not binding on both parties hereto.

g. Special note

1) The latest errata and document released by Nordic Semiconductor ASA must be referred the document is given priority over this document. Please note that KAGA FEI shall not be liable for any problem and related issue for developed or manufactured application software or product without reference or consideration of the information released by Nordic Semiconductor ASA.
2) This product has no firmware. Customer writes firmware that is match the customer applications at the customer's own responsibility.
3) EB5340 series module is qualified as PHY only with Component category by Bluetooth SIG. The QDID of this module is 215066. The final product needs to get qualification as End product before selling the product. Please consult with your qualification body and BQC.

Copyright 2024 KAGA FEI Co., Ltd.

Downloaded from Arrow.com.

3.Absolute maximum ratings

Symbol	Parameter	Min.	Max.	Units
VDD		-0.3	+3.9	V
VDDH		-0.3	+5.8	V
VBUS		-0.3	+5.8	V
GND			0	V
VIO, VDD≤3.6V		-0.3	VDD+ 0.3	V
VIO, VDD>3.6V		-0.3	+3.9	V
Storage temperature		-40	+105	Deg-C
MSL	Moisture Sensitivity Level	3		
ESD HBM	Human Body Model		1	kV
ESD MM	Machine Model		100	V
Endurance	Flash Memory Endurance	10000		write/erase cycles
Retention	Flash Memory Retention	10 years		At 40 deg-C

Copyright 2024 KAGA FEI Co., Ltd.

Downloaded from Arrow.com.

4.Electrical characteristics

4.1.Recommendation operating range

Symbol	Parameter	Min.	Typ.	Max.	Units
VDD	VDD supply voltage, independent of DCDC enable	1.7	3.0	3.6	V
VDDH	VDDH supply voltage, independent of DCDC enable	2.5	3.7	5.5	V
VBUS	VBUS USB supply voltage	4.35	5	5.5	V
VDD,POR	VDD supply voltage needed during power-on reset.	1.75			V
TA	Operation temperature*1	-40	25	105	Deg-C

*1 ANT specification requires +/-50ppm accuracy for 32.768kHz clock. The internal 32.768kHz crystal does not meet to +/-50ppm over the whole recommended operation temperature range.

4.2.DC Specifications

The Specification applies for Topr.= 25 degrees C, VDD = VDDH = 3.0V

Symbol	Parameter (condition)	Min.	Typ.	Max.	Units
VIH	Input high voltage	0.7 x VDD		VDD	V
VIL	Input low voltage	GND		0.3 x VDD	V
VOH	Output high voltage (high drive, 5 mA, VDD=>2.7V)	VDD-0.4		VDD	V
VOL	Output low voltage (high drive, 5 mA, VDD=>2.7V)	GND		GND+0.4	V
RPU	Pull-up resistance		13		kohm
RPD	Pull-down resistance		13		kohm
ITX,+3dBm ,DCDC	TX only run current (DCDC, 3V) PRF=+3 dBm		5.1		mA
ITX,+3dBm	TX only run current PRF=+3 dBm		11.3		mA
IRX,1M, DCDC	RX only run current (DCDC, 3V) 1Mbps Bluetooth LE		2.7		mA
IRX,1M	RX only run current 1Mbps Bluetooth LE		6.7		mA
IRX,2M, DCDC	RX only run current (DCDC, 3V) 2Mbps Bluetooth LE		3.1		mA
IRX,2M	RX only run current 2Mbps Bluetooth LE		7.9		mA
ION	System ON, no RAM retention, wake on any event		1.3		uA
IOFF	System OFF, no RAM retention, wake on reset		1.0		uA

Copyright 2024 KAGA FEI Co., Ltd.

Downloaded from Arrow.com.

4.3.RF Specifications

Symbol	Description	Min.	Typ.	Max.	Units
Fop	Operating frequencies	2402		2480	MHz
PLL_{chsp}	PLL channel spacing		1		MHz
Df_{BLE1M}	Frequency deviation @ Bluetooth LE 1Mbps		+/- 250		kHz
Df_{BLE2M}	Frequency deviation @ Bluetooth LE 2Mbps		+/- 500		kHz
P_{RF}	Maximum output power		3.0		dBm
P_{RFC}	RF power control range		23		dB
P_{RFCR}	RF power accuracy		+/-2		dB
P_{RF1}	1st Adjacent Channel Transmit Power 1 MHz (1 Mbps)		-24		dBc
P_{RF2}	2nd Adjacent Channel Transmit Power 2 MHz (1 Mbps)		-52		dBc
PRX_{MAX}	Maximum received signal strength at < 0.1% PER		0		dBm
$P_{SENS,IT,1M,BLE}$	Sensitivity 1Mbps Bluetooth LE Ideal transmitter, packet length<=37bytes (0.1% BER)		-98		dBm
$P_{SENS,IT,2M,BLE}$	Sensitivity 2Mbps Bluetooth LE Ideal transmitter, packet length <=37bytes		-95		dBm
$P_{SENS,IT,BLE\ LE125k}$	Sensitivity, 125 kbps Bluetooth LE mode		-104		dBm
$P_{SENS,IT,BLE\ LE500k}$	Sensitivity, 500 kbps Bluetooth LE mode		-100		dBm

EB5340BA1 has 32MHz and 32.768kHz crystal and uses internal load capacitors included in nRF5340 as the load capacitance. It must be set to 12.5pF for 32MHz crystal and 9pF for 32.768kHz crystal.

High-frequency (32 MHz) crystal oscillator (HFXO)
https://infocenter.nordicsemi.com/topic/ps_nrf5340/chapters/oscillators/doc/oscillators.html?cp=4_0_0_3_11_0_0#concept_internal_caps

Low-frequency (32.768 kHz) crystal oscillator (LFXO)
https://infocenter.nordicsemi.com/topic/ps_nrf5340/chapters/oscillators/doc/oscillators.html?cp=4_0_0_3_11_1_0#concept_internal_32k_caps

Many documents of nRF5340, such as product specification and the errata, can be found at the link below (There is a possibility that it will change in the future). Please be sure to check these latest documents when using our module.

nRF5340_Product Specification
https://infocenter.nordicsemi.com/topic/ps_nrf5340/keyfeatures_html5.html?cp=4_0_0

nRF5340 Errata
https://infocenter.nordicsemi.com/topic/struct_nrf53/struct/nrf5340_errata.html?cp=4_0_1

nRF Connect SDK
https://developer.nordicsemi.com/nRF_Connect_SDK/doc/latest/nrf/index.html

For more information
https://infocenter.nordicsemi.com/topic/struct_welcome/struct/welcome.html

Copyright 2024 KAGA FEI Co., Ltd.

Downloaded from Arrow.com.

5.Circuit Schematic

5.1.Block Diagram

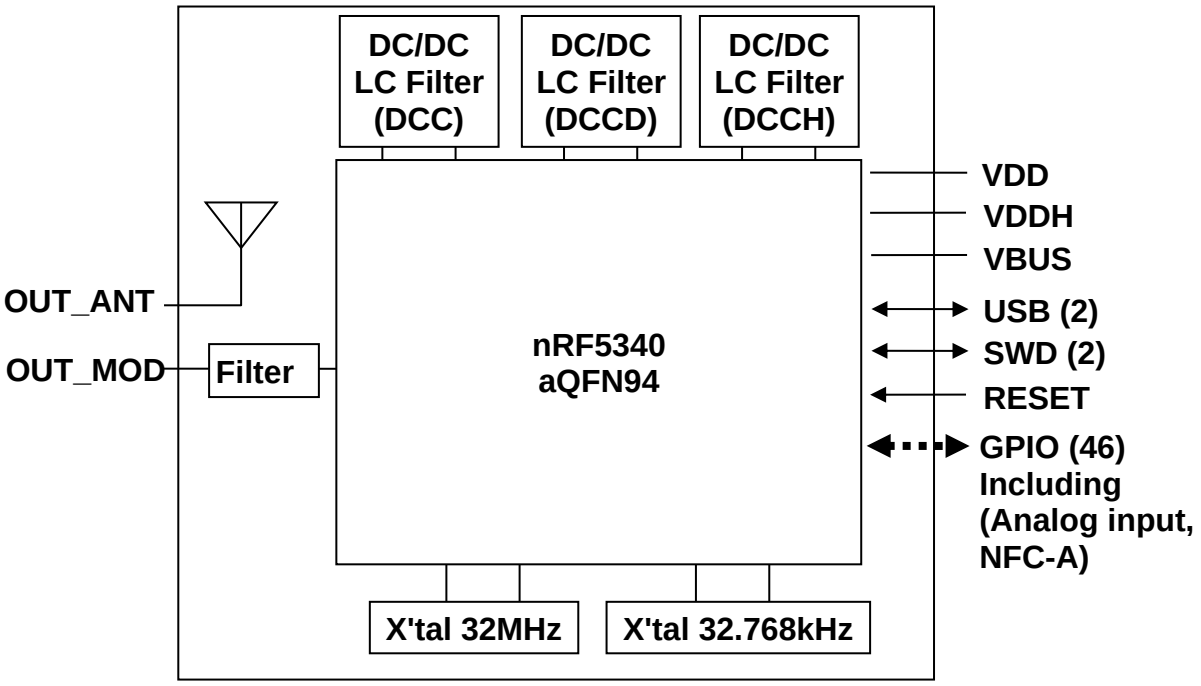

Copyright 2024 KAGA FEI Co., Ltd.

Downloaded from Arrow.com.

5.2.Reference Circuits

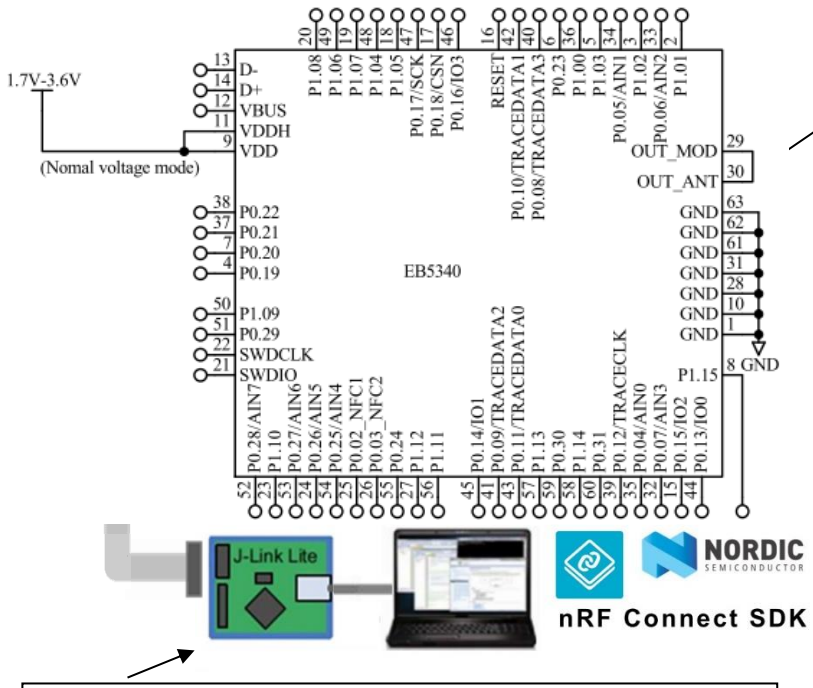

When using the internal antenna of the module, connect PAD29 and PAD30 as short as possible.

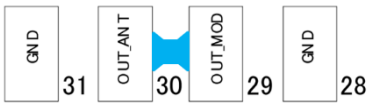

If you need to measure the antenna performance and RF conduction performance, please draw a tie line of PAD29 and PAD30 outside a module in advance.

When measuring, please cut off the signal line and attach the RF connector cable.

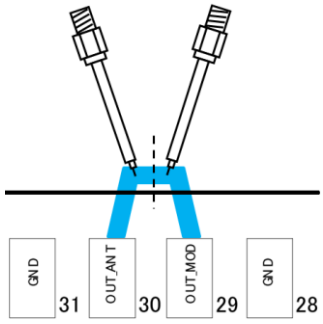

SWD (Serial Wire Debug) is a high performance 2-pin debug port that replaces JTAG. You can debug and program with J-link Lite. When using J-LINK Lite, it is convenient to mount a socket on the customer's main board. The socket will be "10-pin connector two rows of 1.27mm pitch (Ex: PSS-720153-05, Hirosugi instrument). J-Link Lite operates at 3.3 V. do not operate at 1.8 V, so please be careful.
The SWDIO line has a 13kΩ internal pull-up resistor.
The SWDCLK line has a 13kΩ internal pull-down resistor.

The bypass capacitor necessary for the power supply line is installed inside the module. So you do not need to add external capacitors. However, in case of the operation with the battery, we recommend that you add a bypass capacitor about 100uF in view of the voltage drop during TX/RX. Please consider whether it is necessary according to the performance of the customer's battery.

Copyright 2024 KAGA FEI Co., Ltd.

Downloaded from Arrow.com.

5.2.1. Normal voltage mode

Normal voltage mode is entered when the supply voltage is connected to both the VDD and VDDH pins (so that VDD equals VDDH).

5.2.2.High voltage mode

This module supports supply voltage up to 5.5V, such as lithium-ion battery or USB bus power. High voltage mode is entered when the supply voltage is only connected to the VDDH pin and the VDD pin is not connected to any voltage supply.

Non USB operation

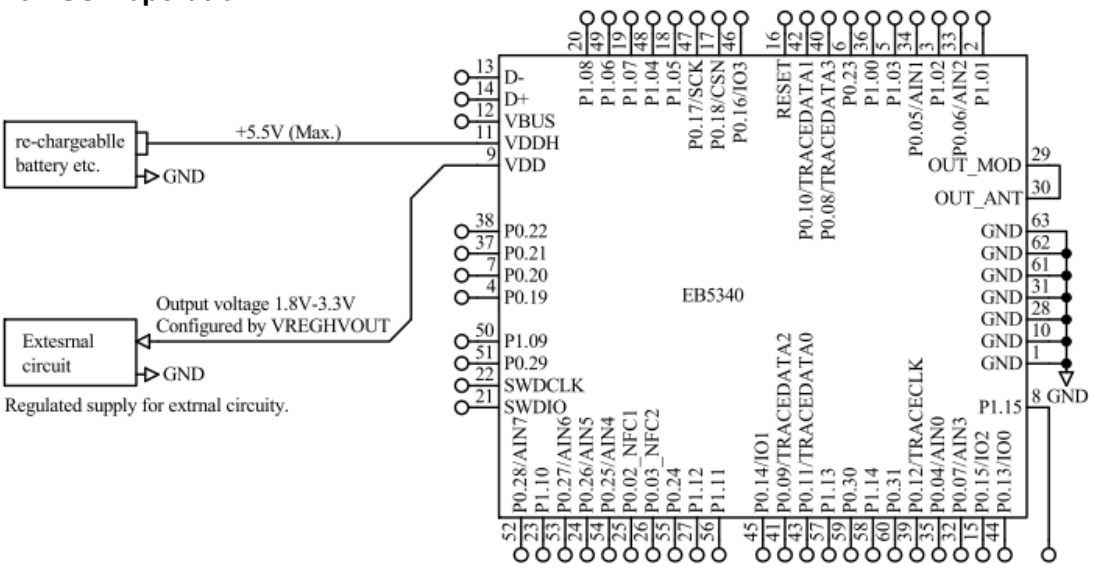

USB operation

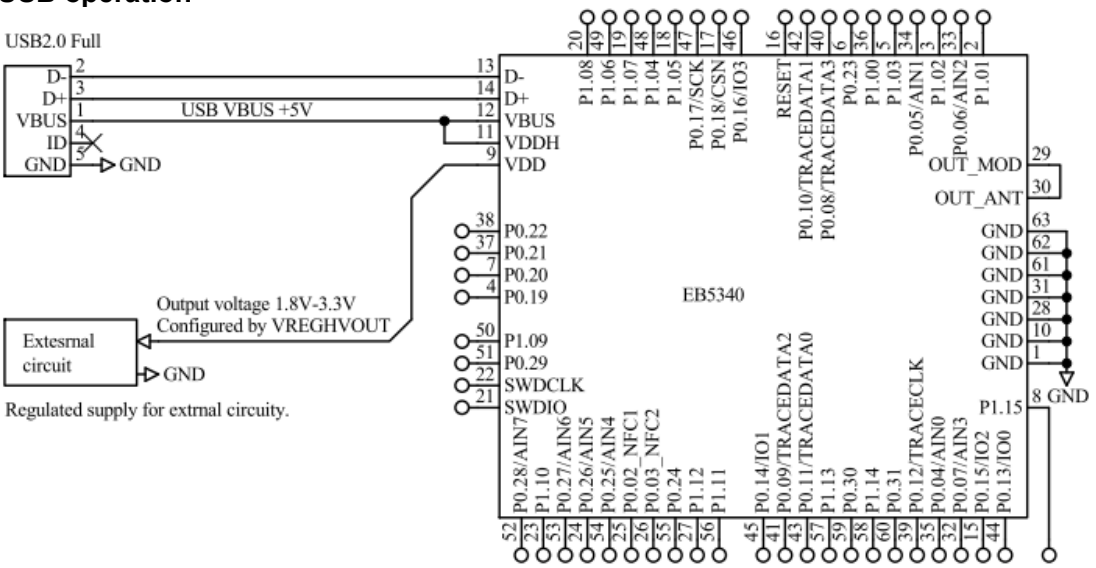

Copyright 2024 KAGA FEI Co., Ltd.

Downloaded from Arrow.com.

5.2.3.Other

P0.02-0.31 and P1.00-1.15 are GPIOs. By setting in the application software, it is assigned to pin as UART, etc. Although unused pins can be made OPEN, please do not recommend to draw signal line from them.

The GPIO high reference voltage always equals the level on the VDD pin. In **normal voltage mode**, the GPIO high level equals the voltage supplied to the VDD pin, and in **high voltage mode** it equals the level specified in register VREGHVOUT.

GPIO high (V): 0.7xVDD to VDD
GPIO low (V): GND to 0.3xVDD

In high voltage mode, the output from internal regulator can be used to supply external circuitry from the VDD pin. The VDD output voltage is configured in register VREGHVOUT and the supported output voltage range depends on the supply voltage provided to the VDDH pin. In addition, the external current draw is defined as the sum of all the GPIO currents and the currents being drawn from VDD, and the maximum value depends on the operating condition.
Please refer to the product specification of nRF5340 chip.

nRF5340_Product Specification
https://infocenter.nordicsemi.com/topic/ps_nrf5340/keyfeatures_html5.html?cp=4_0_0

Copyright 2024 KAGA FEI Co., Ltd.

Downloaded from Arrow.com.

6.Outline/ Appearance

Outline / Land pattern example

Tolerance:
+/- 0.2mm

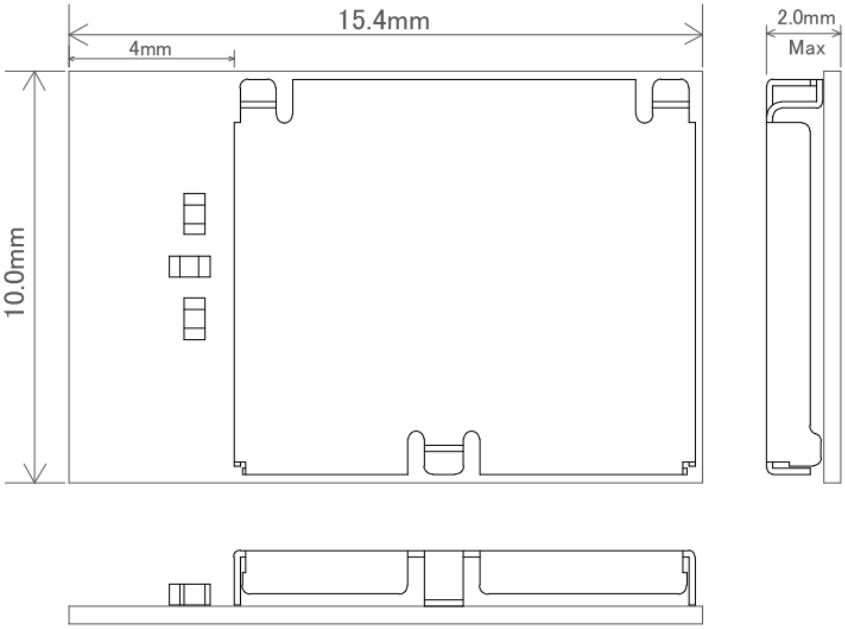

Top View

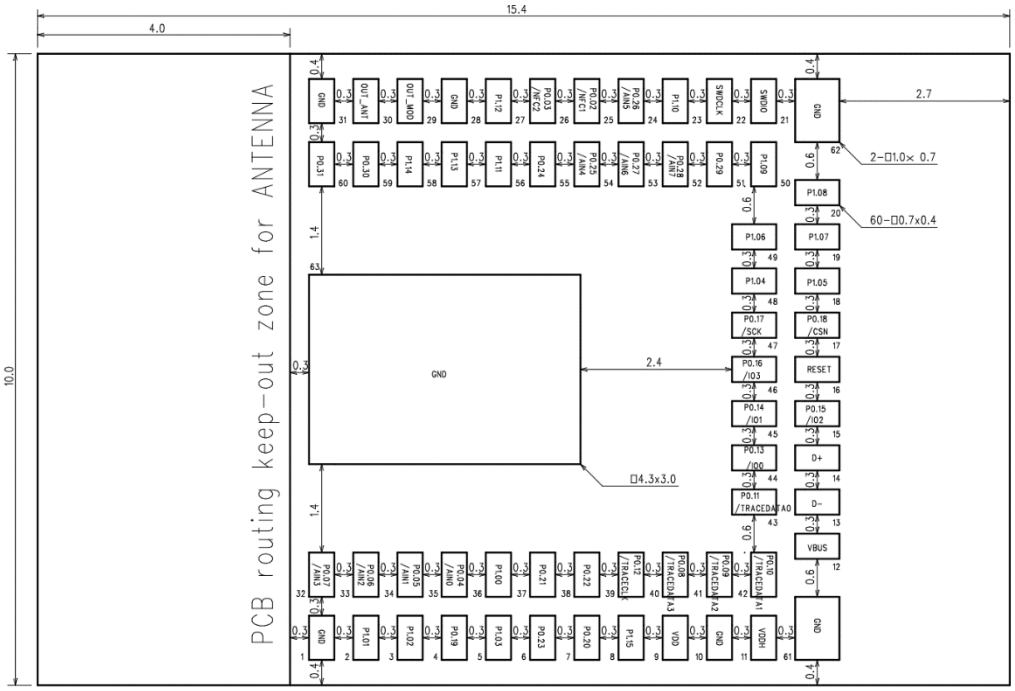

The dimension of the land pattern is the same as a foot pattern.
Recommended metal mask for solder printing

Pad size	Metal mask opening
Signal pad 60 – 0.7 x 0.4 mm	0.7 x 0.4 mm
Corner pad 2 – 1.0 x 0.7 mm	1.0 x 0.7 mm
Center pad 1 – 4.3 x 3.0 mm	1.9 x 1.25 mm x 4

The metal mask thickness: t=0.1mm

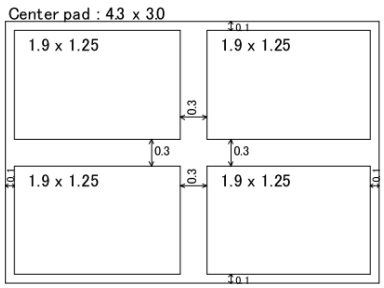

Copyright 2024 KAGA FEI Co., Ltd.

Downloaded from Arrow.com.

7.Pin Layout

Pin Descriptions

Pin	Pin name	Pin function	Description
1	GND	Ground	Ground
2	P1.01	Digital I/O	General purpose I/O
3	P1.02	Digital I/O	General purpose I/O
4	P0.19	Digital I/O	General purpose I/O
5	P1.03	Digital I/O	General purpose I/O
6	P0.23	Digital I/O	General purpose I/O
7	P0.20	Digital I/O	General purpose I/O
8	P1.15	Digital I/O	General purpose I/O
9	VDD	Power	Power supply
10	GND	Ground	Ground
11	VDDH	Power	High voltage power supply
12	VBUS	Power	5 V input for USB 3.3 V regulator
13	D-	USB	USB D-
14	D+	USB	USB D+
15	P0.15	Digital I/O	General purpose I/O
16	RESET	Reset	Pin RESET with internal pull-up resistor
17	P0.18	Digital I/O	General purpose I/O
18	P1.05	Digital I/O	General purpose I/O
19	P1.07	Digital I/O	General purpose I/O
20	P1.08	Digital I/O	General purpose I/O
21	SWDIO	Debug	Serial wire debug I/O for debug and programming
22	SWDCLK	Debug	Serial wire debug clock input for debug and programming
23	P1.10	Digital I/O	General purpose I/O
24	P0.26	Digital I/O	General purpose I/O
25	P0.02_NFC1	Digital I/O NFC input	General purpose I/O NFC antenna connection
26	P0.03_NFC2	Digital I/O NFC input	General purpose I/O NFC antenna connection
27	P1.12	Digital I/O	General purpose I/O
28	GND	Ground	Ground
29	OUT_MOD	RF In/Out	RF I/O pin. It should be connected to Pin30 OUT_ANT for normal operation.
30	OUT_ANT	Antenna In/Out	Internal antenna. It should be connected to Pin29 OUT_MOD for normal operation

Copyright 2024 KAGA FEI Co., Ltd.

Downloaded from Arrow.com.

Pin	Pin name	Pin function	Description
31	GND	Ground	Ground
32	P0.07_AIN3	Digital I/O Analog input	General purpose I/O Analog input
33	P0.06_AIN2	Digital I/O Analog input	General purpose I/O Analog input
34	P0.05_AIN1	Digital I/O Analog input	General purpose I/O Analog input
35	P0.04_AIN0	Digital I/O Analog input	General purpose I/O Analog input
36	P1.00	Digital I/O	General purpose I/O
37	P0.21	Digital I/O	General purpose I/O
38	P0.22	Digital I/O	General purpose I/O
39	P0.12	Digital I/O	General purpose I/O
40	P0.08	Digital I/O	General purpose I/O
41	P0.09	Digital I/O	General purpose I/O
42	P0.10	Digital I/O	General purpose I/O
43	P0.11	Digital I/O	General purpose I/O
44	P0.13	Digital I/O	General purpose I/O
45	P0.14	Digital I/O	General purpose I/O
46	P0.16	Digital I/O	General purpose I/O
47	P0.17	Digital I/O	General purpose I/O
48	P1.04	Digital I/O	General purpose I/O
49	P1.06	Digital I/O	General purpose I/O
50	P1.09	Digital I/O	General purpose I/O
51	P0.29	Digital I/O	General purpose I/O
52	P0.28_AIN7	Digital I/O Analog input	General purpose I/O Analog input
53	P0.27_AIN6	Digital I/O Analog input	General purpose I/O Analog input
54	P0.25_AIN4	Digital I/O Analog input	General purpose I/O Analog input
55	P0.24	Digital I/O	General purpose I/O
56	P1.11	Digital I/O	General purpose I/O
57	P1.13	Digital I/O	General purpose I/O
58	P1.14	Digital I/O	General purpose I/O
59	P0.30	Digital I/O	General purpose I/O
60	P0.31	Digital I/O	General purpose I/O
61	Corner pad	Ground	Ground 1.0mm x 0.7mm
62	Corner pad	Ground	Ground 1.0mm x 0.7mm
63	Center pad	Ground	Ground 4.3mm x 3.0mm

Copyright 2024 KAGA FEI Co., Ltd.

Downloaded from Arrow.com.

8.Handling Precaution

This specification describes desire and conditions especially for mounting.

Desire/Conditions

8.1.Environment conditions for use and storage

1. Store the components in an environment of < **40deg-C/90％RH** if they are in a moisture barrier bag packed by KAGA FEI.
2. Keep the factory ambient conditions at < **30deg-C/60％RH** .
3. Store the components in an environment of < **25±5deg-C/10%RH** after the bag is opened. (The condition is also applied to a stay in the manufacture process).

8.2.Conditions for handling of products

Make sure all of the moisture barrier bags have no holes, cracks or damages at receiving. If an abnormality is found on the bag, its moisture level must be checked in accordance with 2 in 8.2.

Refer to the label on the bag.

1. All of the surface mounting process (reflow process) must be completed **in 12 months** from the bag seal date.
2. Make sure humidity in the bag is less than **10%RH** immediately after open, using a humidity indicator card sealed with the components.
3. **All** of the surface mounting process (reflow process including rework process) must be completed in **168 hours** after the bag is opened (inclusive of any other processes).
4. If any conditions in 8.1 or condition 2 and 3 in 8.2 are not met, bake the components in accordance with the conditions at **125deg-C 24hours**.
5. As a rule, baking the components in accordance with conditions 4 in 8.2 shall be once.
6. Since semi-conductors are inside of the components, they must be free from static electricity while handled.(<100V) Use ESD protective floor mats, wrist straps, ESD protective footwear, air ionizers etc. , if necessary.
7. Please make sure that there are lessen mechanical vibration and shock for this module, and do not drop it.
8. Please recognize pads of back side at surface mount.
9. Washing the module is not recommended. If washing cannot be avoided, please test module functionality and performance after thoroughly drying the module. We cannot be held responsible for any failure due washing the module.

Copyright 2024 KAGA FEI Co., Ltd.

Downloaded from Arrow.com.

10. Please perform temperature conditions of module at reflow within the limits of the following. Please give the number of times of reflow as a maximum of 2 times.

Recommented Reflow Profile

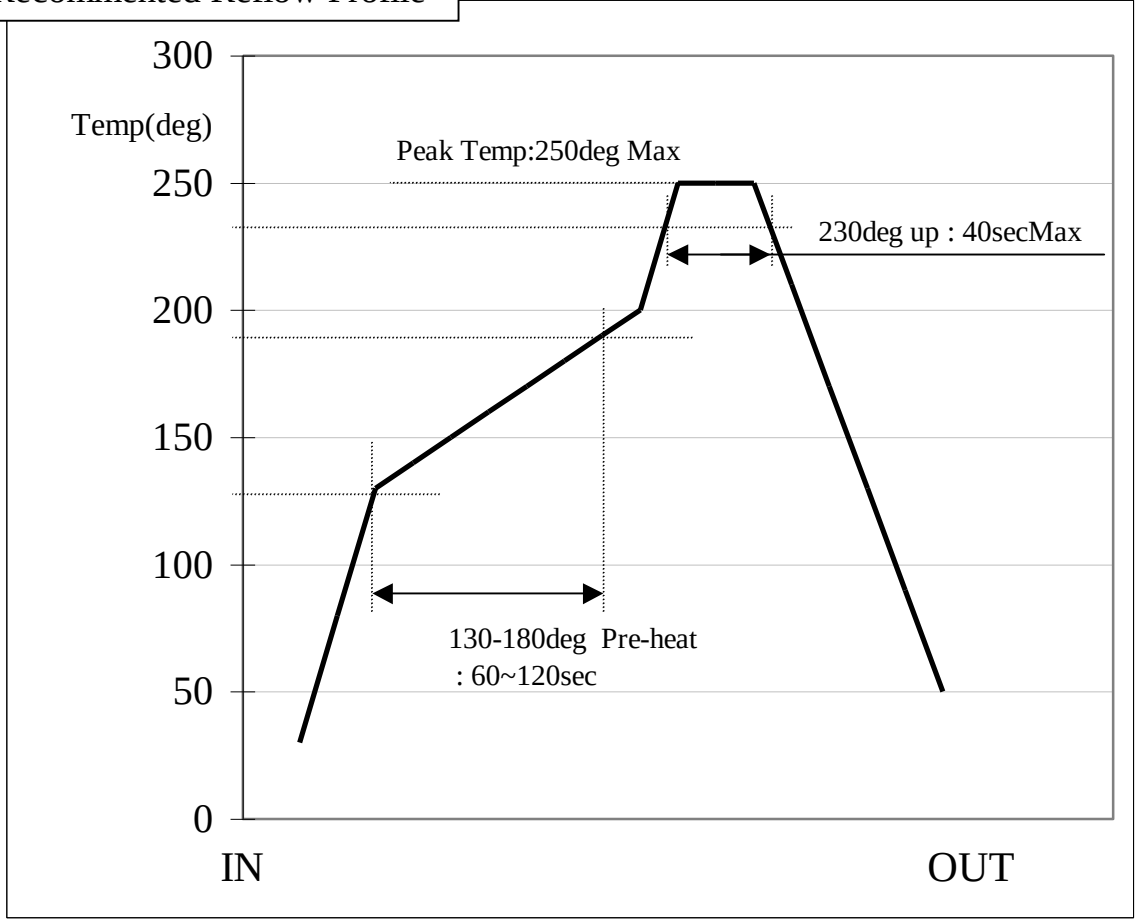

Copyright 2024 KAGA FEI Co., Ltd.

Downloaded from Arrow.com.

9.Packaging Specification

9.1.Packaging Specification

(1) Packaging Material

Name	Outline	Materials
Emboss	24mm wide - 16mmPitch	Couductive PS
Cover Tape	-	-
Reel	ϕ330mm	Couductive PS
Desiccant	30g×1	-
Humidity indicator card	-	-
Aluminum moisture barrier bag	420×460(mm)	(AS)PET/AL/NY/PE(AS)
Label	-	-
Corrugated cardboard box(Inner)	339×351×74(mm)	-
Corrugated cardboard box(Outer)	369×369×277(mm)	-

(2) Packaging Unit

Max 1,000 pieces/Reel Max 3,000 pieces/Box(Outer)

(3) Packing Figure

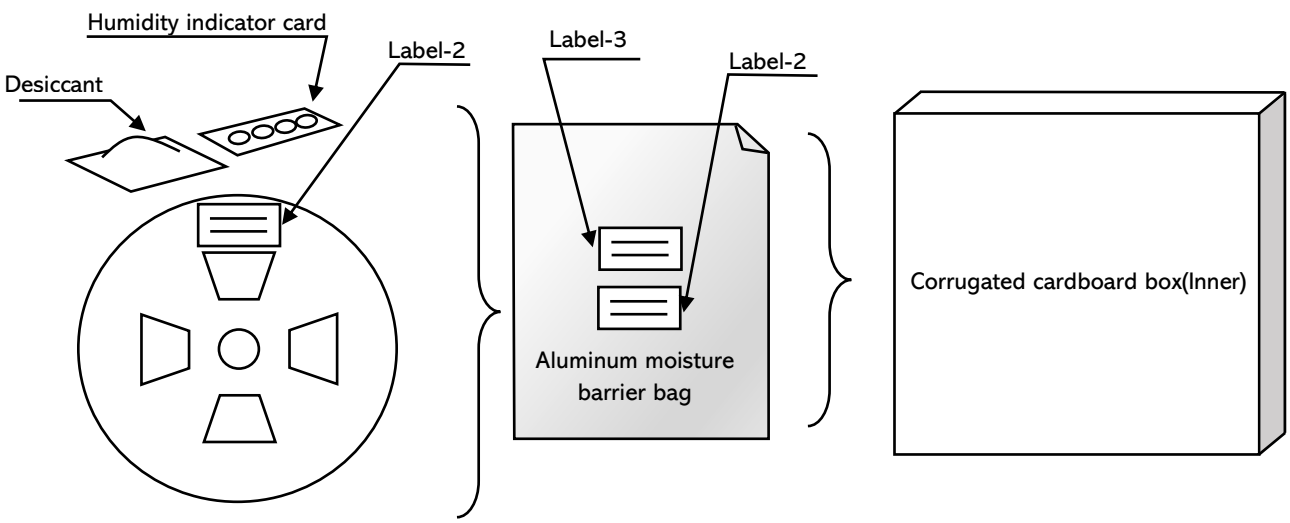

Copyright 2024 KAGA FEI Co., Ltd.

Downloaded from Arrow.com.

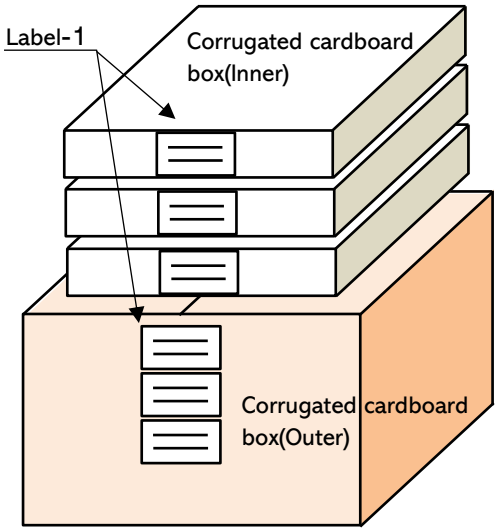

(4) Label

Label-1
- Purchase order
- Part No.
- Quantity
- Lot No.
- Country of origin

Label-2
- Serial No.
- Part No.
- Quantity
- Country of origin

Label-3
- Caution label
- MSL Level3

9.2.Tape specification

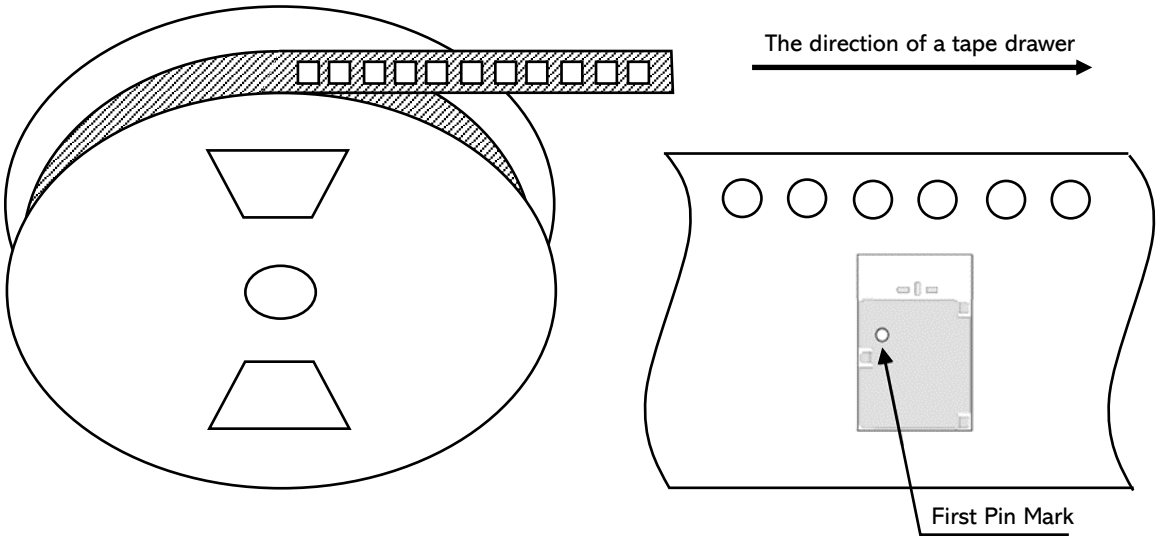

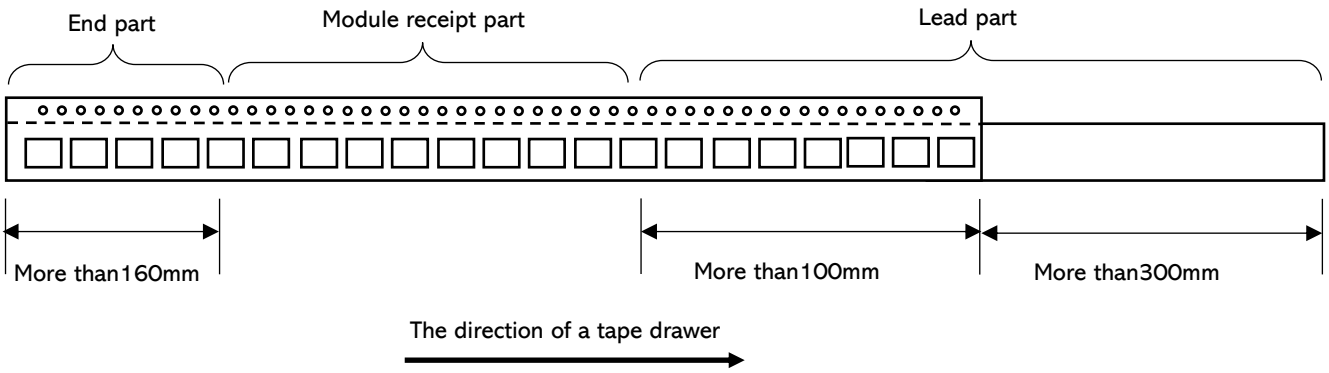

Copyright 2024 KAGA FEI Co., Ltd.

Downloaded from Arrow.com.

Emboss carrier tape drawing

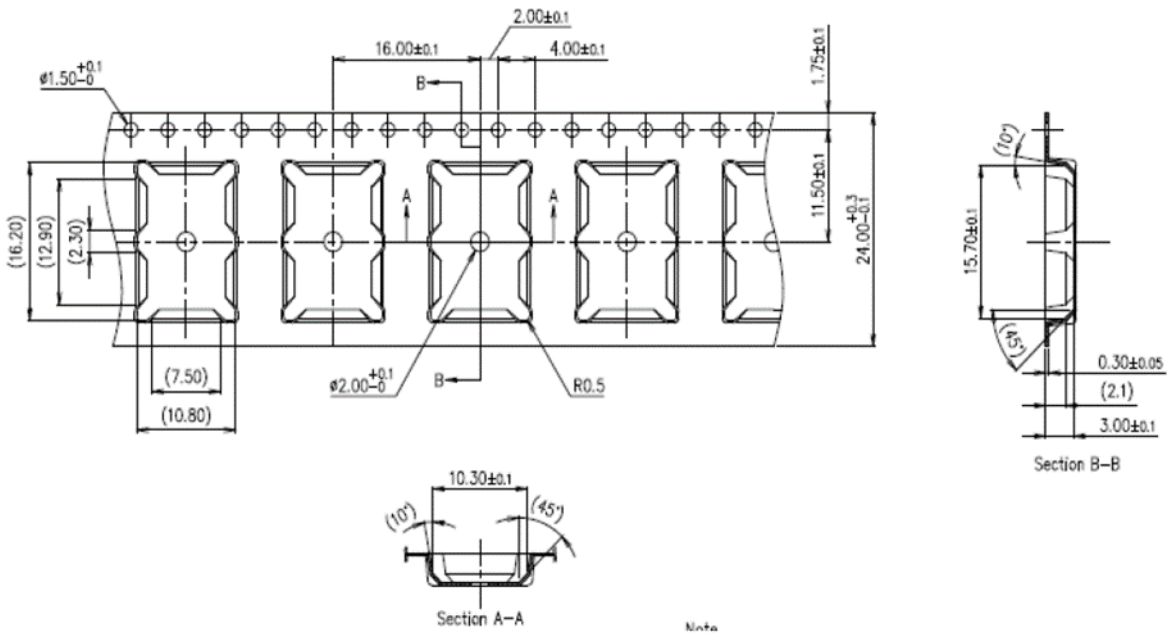

9.3.Reel specification

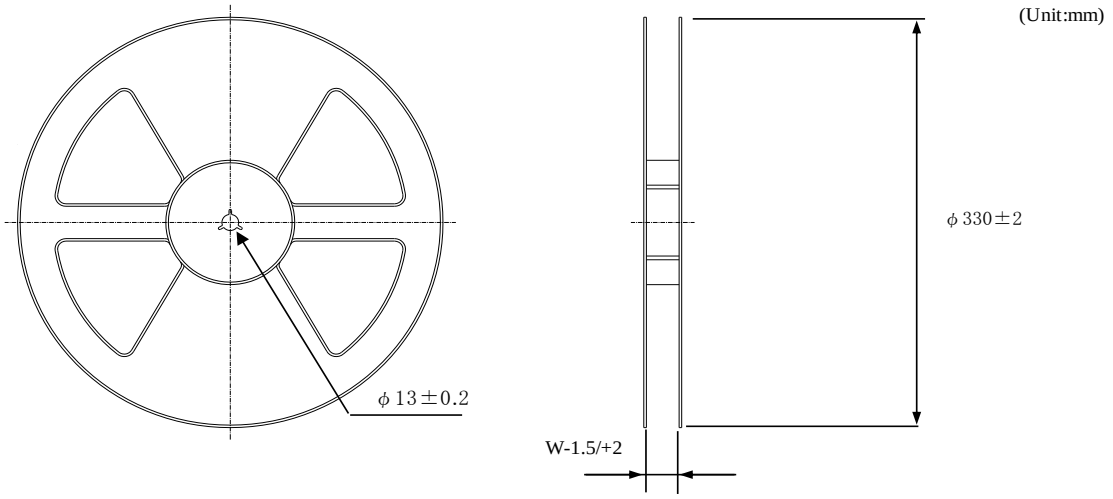

Tape wide	8mm	12mm	16mm	24mm	32mm	44mm
W	9.4mm	13.4mm	17.4mm	25.4mm	33.4mm	45.4mm

Copyright 2024 KAGA FEI Co., Ltd.

Downloaded from Arrow.com.

9.4.Taping performance

Both of an embossing tape top cover tape bear this, when the power of 10N is applied in the direction of a drawer.

The exfoliation adhesion of a top cover tape is the intensity of 0.1~1.3N.
(The angle to pull is 165~180 degrees. The speed to pull is 300 mm/min)

Note

Lack of the parts in 1 reel is with two or less pieces.

MSL Level 3 Under control

Copyright 2024 KAGA FEI Co., Ltd.

Downloaded from Arrow.com.

10.Antenna application note

10.1.Recommended module mounting example

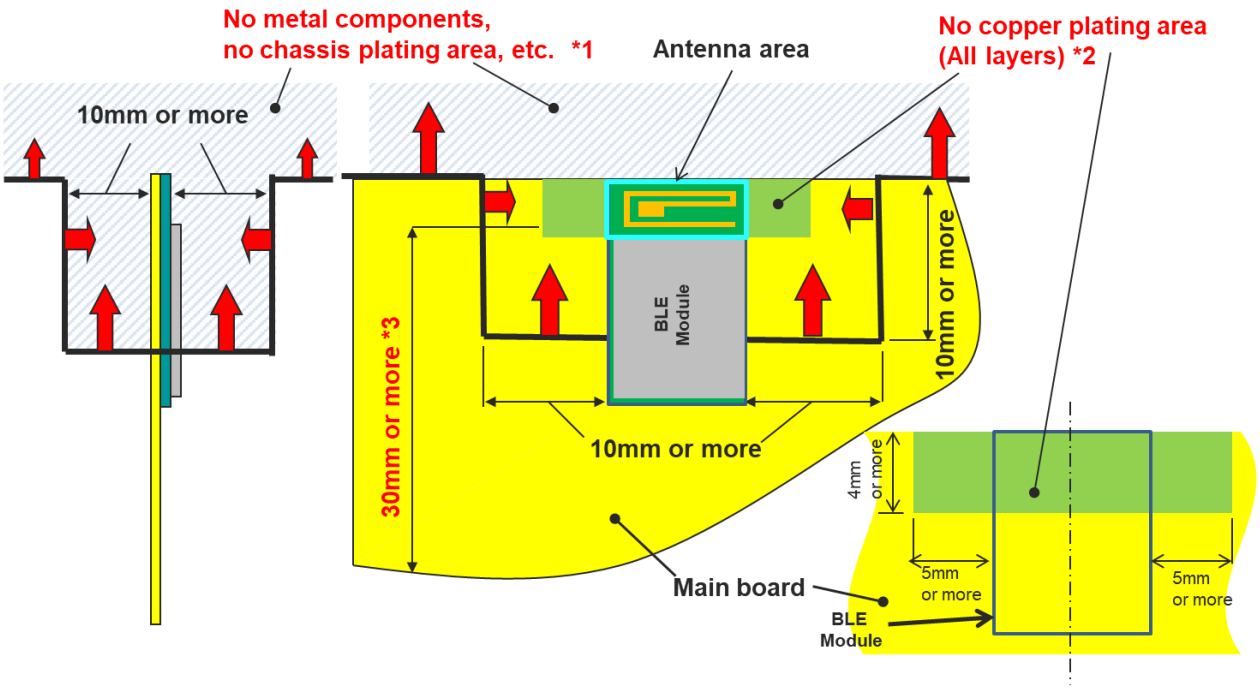

1 Please do not place any metal components in blue shaded space.*1) We do not recommend placing any metal objects upper space of the module in the above figure. If it needs to place metal objects, please consider keeping the metal off from the antenna as far as you can. Such as signal line and metal chassis as possible except for main board while mounting the components in *1 space on the main board is allowed except for no copper plating area. (*2).

*2 This area is routing prohibited area on the main board. Please do not place copper on any layer. Please remain use of FR-4 dielectric material. The antenna is tuned with the FR-4.

*3 Characteristics may deteriorate when GND pattern length is less than 30mm. It should be 30 mm or more as possible.

Even when above mentioned condition is satisfied, communication performance may be significantly deteriorated depending on the structure of the product.

Copyright 2024 KAGA FEI Co., Ltd.

Downloaded from Arrow.com.

10.2.Other module mounting examples

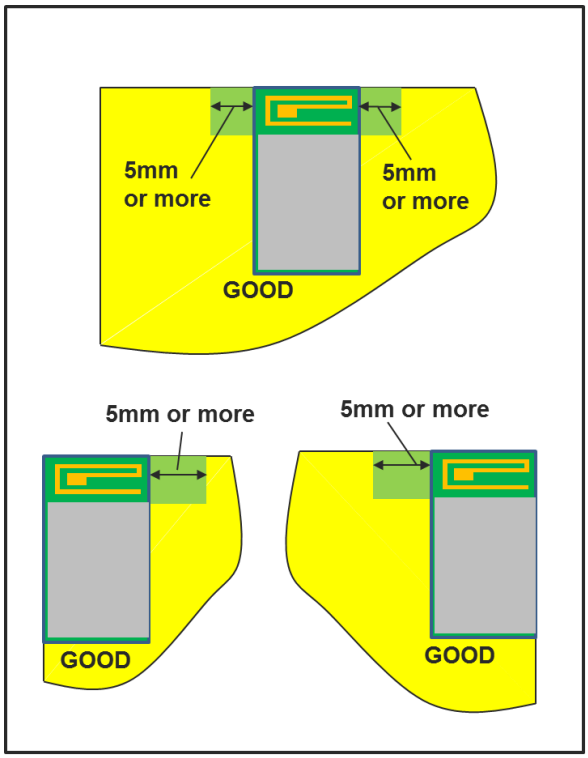

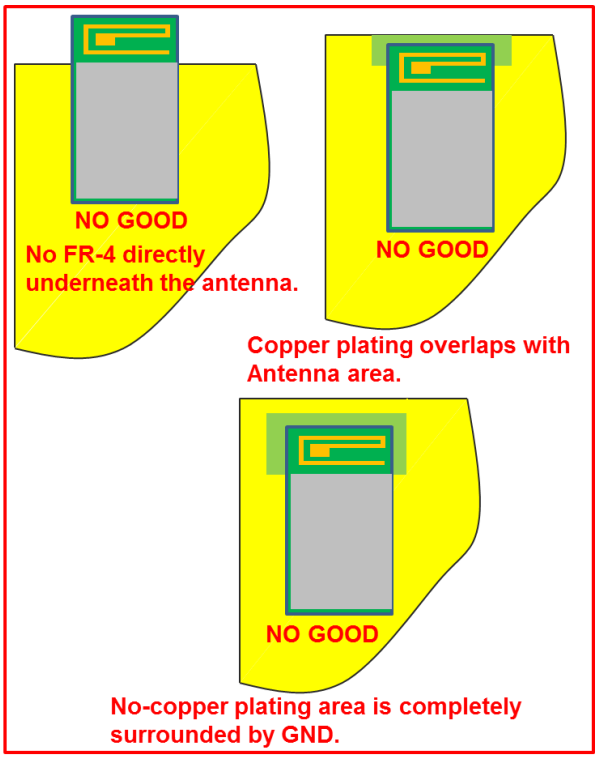

10.3.Placement of resin or plastic parts

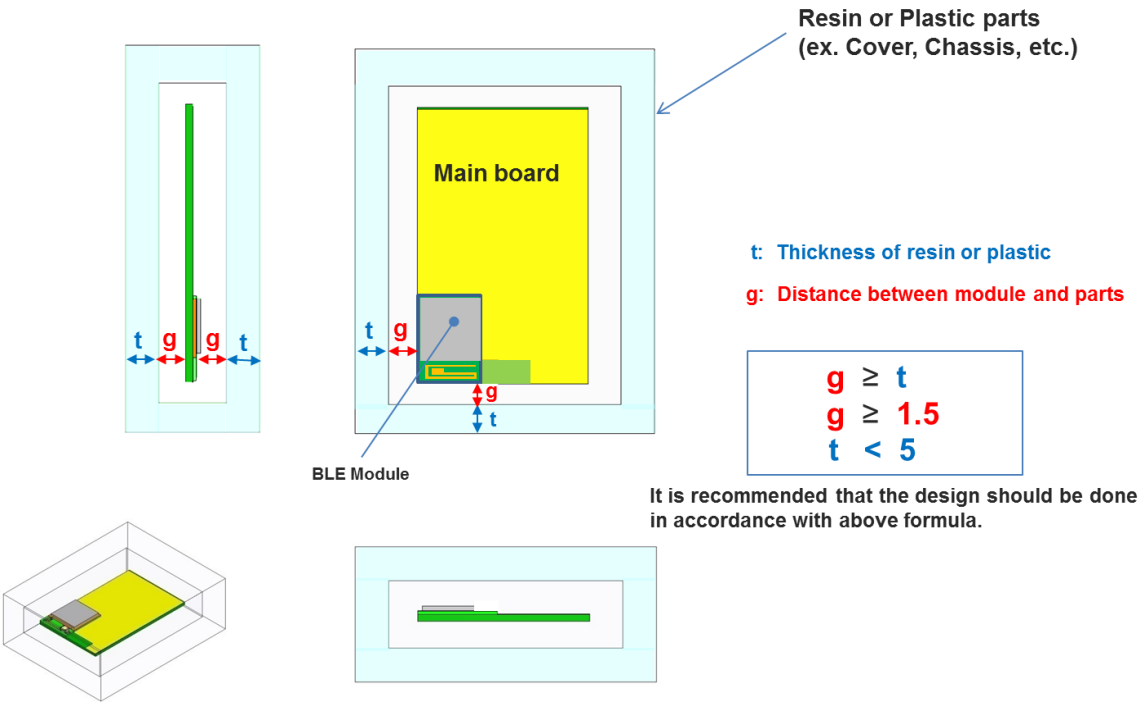

Please do not apply molding over the antenna area of BLE module.

Copyright 2024 KAGA FEI Co., Ltd.

Downloaded from Arrow.com.

10.4.Directional characteristics example (when mounted on evaluation board)

Measurement data of antenna

Appearance and coordinates definition

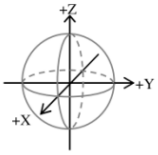

Frequency	[MHz]	@2400	@2440	@2480
Peak gain		[dBi]		
3-plane	TX-H	-2.6	-1.6	-0.2
	TX-V	-4.8	-3.4	-2.1
		-2.6	**-1.6**	**-0.2**
Average gain		[dBi]		
XY-plane	TX-H	-8.3	-6.8	-5.7
	TX-V	-12.6	-11.0	-9.9
	Plus(H,V)	-6.9	-5.4	-4.3
YZ-plane	TX-H	-8.5	-7.5	-6.5
	TX-V	-23.4	-23.1	-20.0
	Plus(H,V)	-8.3	-7.4	-6.3
XZ-plane	TX-H	-15.7	-14.2	-12.6
	TX-V	-6.9	-5.7	-4.9
	Plus(H,V)	-6.4	-5.1	-4.2
3plane	TX-H	-9.8	-8.5	-7.4
	TX-V	-10.6	-9.3	-8.3
		-7.1	**-5.9**	**-4.8**
Efficiency	[dB]	**-7.1**	**-5.8**	**-4.8**
VSWR	[:1]	5.0	3.3	2.0

*Note:The value is average value in 1 round of each inclination direction angle.

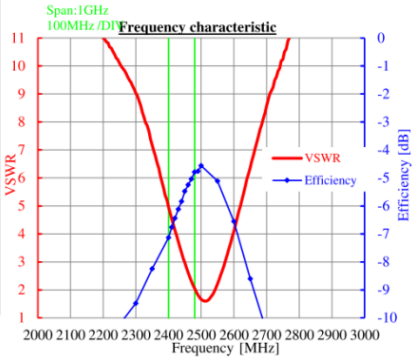

Radiation pattern

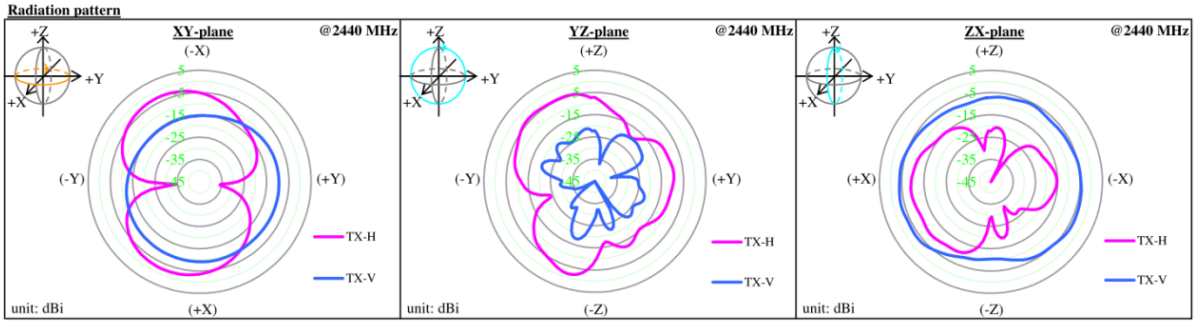

About this Application Note

・This Application Note has been prepared as a reference material to help obtaining the antenna performance mounted on BLE module better while it is not guaranteed or assured to obtain better communication performance and distance.
・This product “BLE module” has been certified and matching circuit constant for antenna within module cannot be changed when ambient environment condition changes. The product must be re-certified when matching circuit constant is changed.

Copyright 2024 KAGA FEI Co., Ltd.

Downloaded from Arrow.com.

11.Design guide

11.1.Battery operation

When using a small battery (e.g. CR2032), a large capacitor (e.g.100uF low leakage capacitor) should be placed near the battery. This will reduce the voltage drop especially when the module is operated at low temperatures

11.2.Pattern Design Guide

11.2.1.Power Supply System

The VDD trace should be greater than 0.5mm and a bigger a via diameter is recommended.

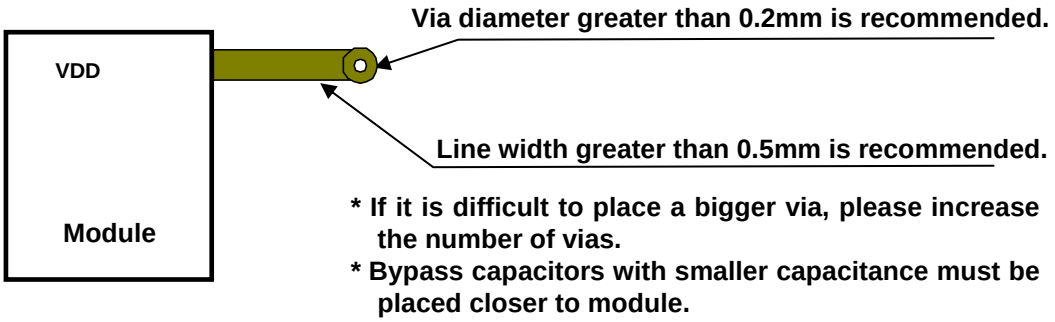

11.2.2.GND Pattern

Wide GND area must be provided to ensure isolation for each layer. Also, please surround the signal lines of GPIO, DCC etc. with GND layer as much as possible

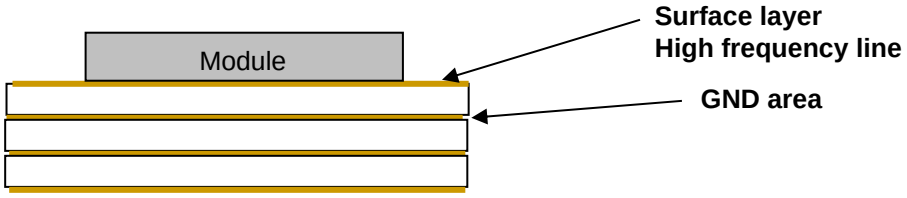

GND pattern of each layer should be connected to GND area with large number of via.

Copyright 2024 KAGA FEI Co., Ltd.

Downloaded from Arrow.com.

Precautions

■ Please conduct validation and verification of our products in actual condition of mounting and operating environment before using our products.

■ The products listed in this Specification are intended for use in general electronic equipment (e.g., AV equipment, OA equipment, home electric appliances, office equipment, information and communication equipment including, without limitation, mobile phone, and PC). Please be sure to contact KAGA FEI for further information before using the products for any equipment which may directly cause loss of human life or bodily injury (e.g., transportation equipment including, without limitation, automotive powertrain control system, train control system, and ship control system, traffic signal equipment, disaster prevention equipment, medical equipment classified as Class I, II or III by IMDRF, highly public information network equipment including, without limitation, telephone exchange, and base station).
Please do not incorporate our products into any equipment requiring high levels of safety and/or reliability (e.g., aerospace equipment, aviation equipment, medical equipment classified as Class IV by IMDRF, nuclear control equipment, undersea equipment, military equipment).
When our products are used even for high safety and/or reliability-required devices or circuits of general electronic equipment, it is strongly recommended to perform a thorough safety evaluation prior to use of our products and to install a protection circuit as necessary.
Please note that unless you obtain prior written consent of KAGA FEI, KAGA FEI shall not be in any way responsible for any damages incurred by you or third parties arising from use of the products listed in this Specification for any equipment requiring inquiry to KAGA FEI or prohibited for use by KAGA FEI as described above.

■ Information contained in this Specification is intended to convey examples of typical performances and/or applications of our products and is not intended to make any warranty with respect to the intellectual property rights or any other related rights of KAGA FEI or any third parties nor grant any license under such rights.

■ Please note that the scope of warranty for our products is limited to the delivered our products themselves and KAGA FEI shall not be in any way responsible for any damages resulting from a fault or defect in our products.

■ The contents of this Specification are applicable to our products which are purchased from our sales offices or authorized distributors (hereinafter “KAGA FEI’s official sales channel”). Please note that the contents of this specification are not applicable to our products purchased from any seller other than KAGA FEI’s official sales channel.

■ The contents of this Specification are applied in preference to any agreement between you and KAGA FEI or KAGA FEI's official sales channel (e.g., supply and purchase agreement, quality assurance agreement).

■ You will have deemed accepted the contents of this Specification upon usage of our products.

■ Caution for Export
Some of our products listed in this specification may require specific procedures for export according to "U.S. Export Administration Regulations" and other applicable regulations.

Copyright 2024 KAGA FEI Co., Ltd.

Downloaded from Arrow.com.