SLG46721

GreenPAK
Programmable Mixed Signal Array

Features

- Logic & Mixed Signal Circuits
- Highly Versatile Macrocells
- Read Back Protection (Read Lock)
- 1.8 V (±5 %) to 5 V (±10 %) Supply
- Operating Temperature Range: -40 °C to 85 °C
- RoHS Compliant / Halogen-Free
- 20-pin STQFN: 2 x 3 x 0.55 mm, 0.4 mm pitch

Applications

- Personal Computers and Servers
- PC Peripherals
- Consumer Electronics
- Data Communications Equipment
- Handheld and Portable Electronics

Pin Configuration

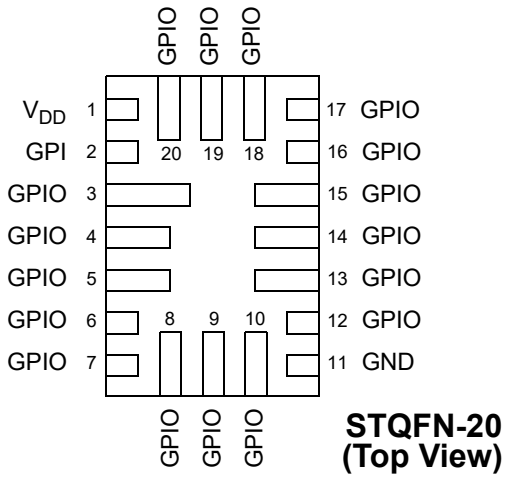

STQFN-20 (Top View)

Block Diagram

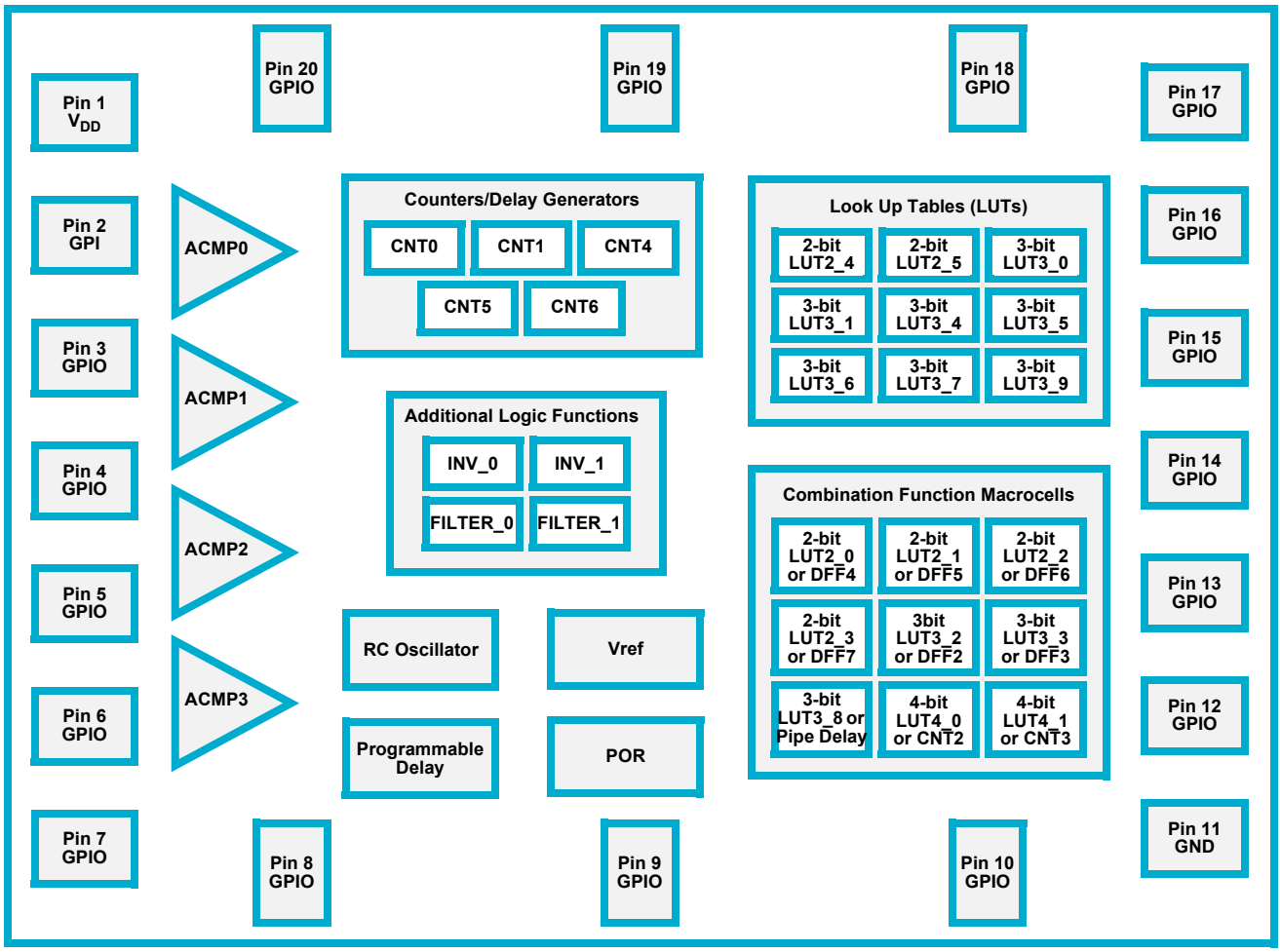

© 2023 Renesas Electronics Corporation

Downloaded from Arrow.com.

1.0 Overview

The SLG46721 provides a small, low power component for commonly used mixed-signal functions. The user creates their circuit design by programming the one time Non-Volatile Memory (NVM) to configure the interconnect logic, the I/O Pins and the macrocells of the SLG46721. This highly versatile device allows a wide variety of mixed-signal functions to be designed within a very small, low power single integrated circuit. The macrocells in the device include the following:

- Four Analog Comparators (ACMP)
- Two Voltage References (Vref)
- Nine Combinatorial Look Up Tables (LUTs)
  - Two 2-bit LUTs
  - Seven 3-bit LUTs
- Nine Combination Function Macrocells
  - Four Selectable DFF/Latch or 2-bit LUTs
  - Two Selectable DFF/Latch or 3-bit LUTs
  - One Selectable Pipe Delay or 3-bit LUT
  - Two Selectable CNT/DLY or 4-bit LUTs
- Five Counter / Delay Generators (CNT/DLY)
  - One 14-bit delay/counter
  - One 14-bit delay/counter with external clock/reset
  - Three 8-bit delays/counters
- Pipe Delay – 16 stage/3 output (Part of Combination Function Macrocell)
- Programmable Delay
- Additional Logic Functions
  - Two Inverters
  - Two Deglitch Filters
- RC Oscillator (RC OSC)

© 2023 Renesas Electronics Corporation

Downloaded from Arrow.com.

2.0 Pin Description

2.1 Functional and Programming Pin Description

Pin #	Pin Name	Function	Programming Function
1	V_{DD}	Power Supply	Power Supply
2	GPI	General Purpose Input	V_{PP} (Programming Voltage)
3	GPIO	General Purpose I/O with OE	Reset
4	GPIO	General Purpose I/O	N/A
5	GPIO	General Purpose I/O with OE	N/A
6	GPIO	General Purpose I/O or Analog Comparator 0 (+)	N/A
7	GPIO	General Purpose I/O with OE or Analog Comparator 0 (-)	N/A
8	GPIO	General Purpose I/O	N/A
9	GPIO	General Purpose I/O with OE	N/A
10	GPIO	General Purpose I/O or Analog Comparator 1 (+)	N/A
11	GND	Ground	Ground
12	GPIO	General Purpose I/O or External Vref (ACMP1 IN-)	N/A
13	GPIO	General Purpose I/O with OE or Analog Comparator 2 (+)	N/A
14	GPIO	General Purpose I/O with OE or Analog Comparator 2 (-) (ACMP3 IN-)	N/A
15	GPIO	General Purpose I/O or Analog Comparator 3 (+)	N/A
16	GPIO	General Purpose I/O with OE	Programming Mode Control
17	GPIO	General Purpose I/O	Programming ID Pin
18	GPIO	General Purpose I/O with OE and Vref output (VREF1)	Programming SDIO Pin
19	GPIO	General Purpose I/O with OE and Vref output (VREF0)	Programming SRDWB Pin
20	GPIO	General Purpose I/O or External Clock Input	Programming SCL Pin

© 2023 Renesas Electronics Corporation

Downloaded from Arrow.com.

3.0 User Programmability

The SLG46721 is a user programmable device with One-Time-Programmable (OTP) memory elements that are able to construct combinatorial logic elements. Three of the I/O Pins provide a connection for the bit patterns into the OTP on board memory. A programming development kit allows the user the ability to create initial devices. Once the design is finalized, the programming code (.gpx file) is forwarded to Renesas Electronics Corporation to integrate into a production process.

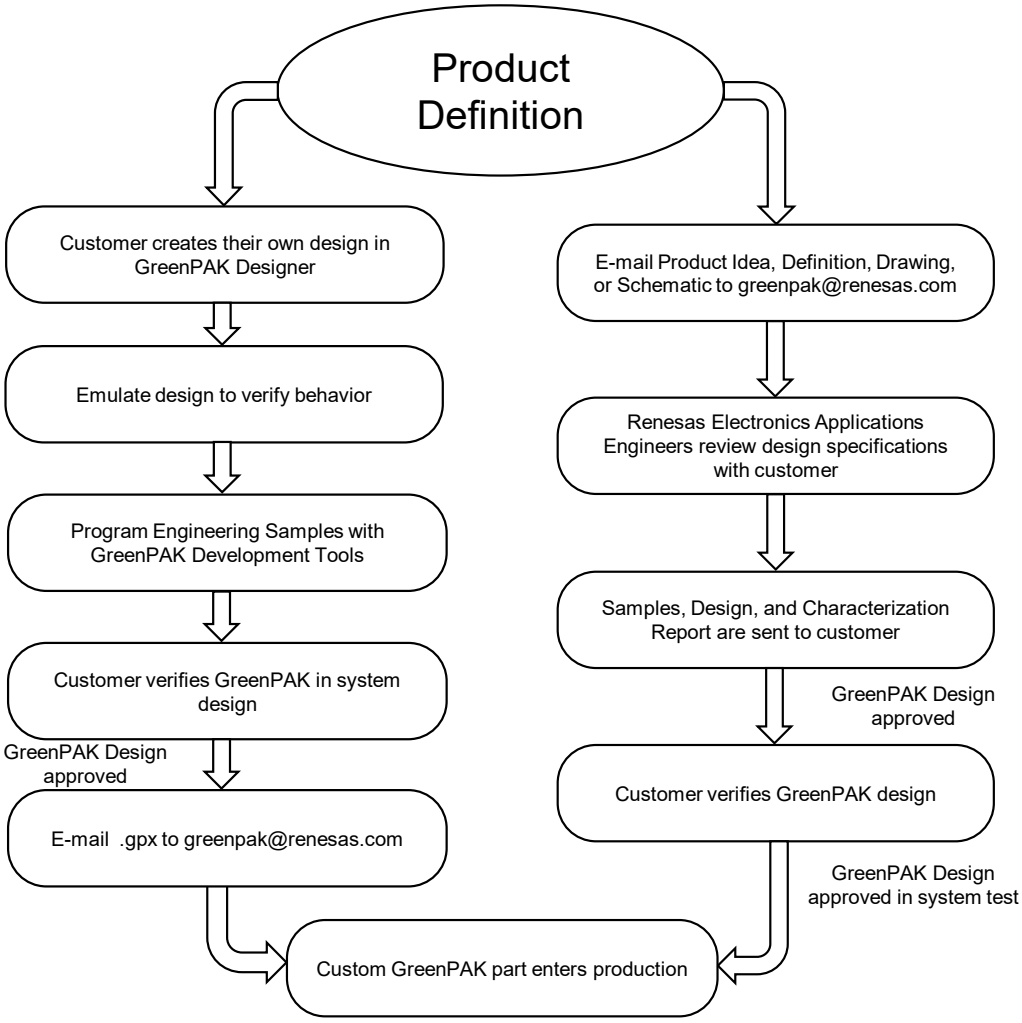

Figure 1. Steps to create a custom GreenPAK device

Downloaded from Arrow.com.

4.0 Ordering Information

Part Number	Type
SLG46721V	20-pin STQFN
SLG46721VTR	20-pin STQFN - Tape and Reel (3k units)

Note 1: Use SLG46721V to order. Shipments are automatically in Tape and Reel.

Note 2: "TR" suffix is no longer used. It is a legacy naming convention shown here only for informational purposes.

Downloaded from Arrow.com.

5.0 Electrical Specifications

5.1 Absolute Maximum Conditions

Parameter		Min.	Max.	Unit
Supply Voltage on V_{DD} relative to GND		-0.5	7	V
DC Input Voltage		GND - 0.5	V_{DD} + 0.5	V
Maximum Average or DC Current (Through pin)	Push-Pull 1x	--	8	mA
	Push-Pull 2x	--	10	
	OD 1x	--	8	
	OD 2x	--	12	
	OD 4x	--	25	
Current at Input Pin		-1.0	1.0	mA
Storage Temperature Range		-65	150	°C
Junction Temperature		--	150	°C
ESD Protection (Human Body Model)		2000	--	V
ESD Protection (Charged Device Model)		1300	--	V
Moisture Sensitivity Level		1		

5.2 Electrical Characteristics (1.8 V ±5 % V_{DD})

Symbol	Parameter	Condition/Note	Min.	Typ.	Max.	Unit
V_{DD}	Supply Voltage		1.71	1.80	1.89	V
T_A	Operating Temperature		-40	25	85	°C
V_{AIR}	Analog Input Voltage Range	Positive Input	0	--	V_{DD}	V
		Negative Input	0	--	1.1	V
V_{IH}	HIGH-Level Input Voltage	Logic Input	1.100	--	--	V
		Logic Input with Schmitt Trigger	1.270	--	--	V
		Low-Level Logic Input	0.980	--	--	V
V_{IL}	LOW-Level Input Voltage	Logic Input	--	--	0.690	V
		Logic Input with Schmitt Trigger	--	--	0.440	V
		Low-Level Logic Input	--	--	0.520	V
I_{LKG}	Input Leakage (Absolute Value)		--	1	1000	nA
V_{OH}	HIGH-Level Output Voltage	Push-Pull 1X, Open Drain PMOS 1X, I_{OH} = 100 µA	1.690	1.789	--	V
		Push-Pull 2X, Open Drain PMOS 2X, I_{OH} = 100 µA	1.700	1.794	--	V

Downloaded from Arrow.com.

Symbol	Parameter	Condition/Note	Min.	Typ.	Max.	Unit
V_{OL}	LOW-Level Output Voltage	Push-Pull 1X, I_{OL}= 100 µA	--	0.008	0.030	V
		Push-Pull 2X, I_{OL}= 100 µA	--	0.004	0.010	V
		Open Drain NMOS 1X, I_{OL}= 100 µA	--	0.005	0.020	V
		Open Drain NMOS 2X, I_{OL}= 100 µA	--	0.003	0.010	V
		Open Drain NMOS 4X, I_{OL}= 100 µA	--	0.003	0.004	V
I_{OH}	HIGH-Level Output Current (see Note 1)	Push-Pull 1X, Open Drain PMOS 1X, $V_{OH} = V_{DD}$ - 0.2 V	1.066	1.703	--	mA
		Push-Pull 2X, Open Drain PMOS 2X, $V_{OH} = V_{DD}$ - 0.2 V	2.216	3.406	--	mA
I_{OL}	LOW-Level Output Current (see Note 1)	Push-Pull 1X, V_{OL} = 0.15 V	0.917	1.689	--	mA
		Push-Pull 2X, V_{OL} = 0.15 V	1.834	3.378	--	mA
		Open Drain NMOS 1X, V_{OL} = 0.15 V	1.375	2.534	--	mA
		Open Drain NMOS 2X, V_{OL} = 0.15 V	2.750	5.068	--	mA
		Open Drain NMOS Super Drive, V_{OL} = 0.15 V	5.500	10.136	--	mA
I_{VDD}	Maximum Average or DC Current Through V_{DD} Pin (Per chip side, see Note 2)	T_J = 85 °C	--	--	45	mA
		T_J = 110 °C	--	--	22	mA
I_{GND}	Maximum Average or DC Current Through GND Pin (Per chip side, see Note 2)	T_J = 85 °C	--	--	84	mA
		T_J = 110 °C	--	--	40	mA
V_O	Maximal Voltage Applied to any PIN in High-Impedance State		--	--	V_{DD}+0.3	V
T_{SU}	Startup Time	From V_{DD} rising past PON_{THR}	--	0.3	--	ms
PON_{THR}	Power On Threshold	V_{DD} Level Required to Start Up the Chip	1.180	1.353	1.516	V
$POFF_{THR}$	Power Off Threshold	V_{DD} Level Required to Switch Off the Chip	0.730	0.914	1.103	V
R_{PULL}	Pull Up or Pull Down Resistance	1 M for Pull Up: V_{IN} = GND; for Pull Down: $V_{IN} = V_{DD}$	--	1	--	MΩ
		100 k for Pull Up: V_{IN} = GND; for Pull Down: $V_{IN} = V_{DD}$	--	100	--	kΩ
		10 k for Pull Up: V_{IN} = GND; for Pull Down: $V_{IN} = V_{DD}$	--	10	--	kΩ
C_{VDD}	Decoupling Capacitor	Capacitor Value at V_{DD}	--	0.1	--	µF

Note 1: DC or average current through any pin should not exceed value given in Absolute Maximum Conditions.
Note 2: The GreenPAK's power rails are divided in two sides. Pins 2, 3, 4, 5, 6, 7, 8, 9 and 10 are connected to one side, pins 12, 13, 14, 15, 16, 17, 18, 19 and 20 to another.

Downloaded from Arrow.com.

5.3 Electrical Characteristics (3.3 V ±10 % V_{DD})

Symbol	Parameter	Condition/Note	Min.	Typ.	Max.	Unit
V_{DD}	Supply Voltage		3.0	3.3	3.6	V
T_A	Operating Temperature		-40	25	85	°C
V_{AIR}	Analog Input Voltage Range	Positive Input	0	--	V_{DD}	V
		Negative Input	0	--	1.2	V
V_{IH}	HIGH-Level Input Voltage	Logic Input	1.780	--	--	V
		Logic Input with Schmitt Trigger	2.130	--	--	V
		Low-Level Logic Input	1.130	--	--	V
V_{IL}	LOW-Level Input Voltage	Logic Input	--	--	1.210	V
		Logic Input with Schmitt Trigger	--	--	0.950	V
		Low-Level Logic Input	--	--	0.690	V
I_{LKG}	Input Leakage (Absolute Value)		--	1	1000	nA
V_{OH}	HIGH-Level Output Voltage	Push-Pull 1X,Open Drain PMOS 1X, I_{OH} = 3 mA	2.735	3.120	--	V
		Push-Pull 2X, Open Drain PMOS 2X, I_{OH} = 3 mA	2.870	3.210	--	V
V_{OL}	LOW-Level Output Voltage	Push-Pull 1X, I_{OL}= 3 mA	--	0.130	0.228	V
		Push-Pull 2X, I_{OL}= 3 mA	--	0.060	0.108	V
		Open Drain NMOS 1X, I_{OL}= 3 mA	--	0.080	0.147	V
		Open Drain NMOS 2X, I_{OL}= 3 mA	--	0.040	0.080	V
		Open Drain NMOS 4X, I_{OL}= 3 mA	--	0.027	0.034	V
I_{OH}	HIGH-Level Output Current (see Note 1)	Push-Pull 1X, Open Drain PMOS 1X, V_{OH} = 2.4 V	6.045	12.080	--	mA
		Push-Pull 2X, Open Drain PMOS 2X, V_{OH} = 2.4 V	11.522	24.160	--	mA
I_{OL}	LOW-Level Output Current (see Note 1)	Push-Pull 1X, V_{OL} = 0.4 V	4.875	8.244	--	mA
		Push-Pull 2X, V_{OL} = 0.4 V	9.750	16.488	--	mA
		Open Drain NMOS 1X, V_{OL} = 0.4 V	7.313	12.370	--	mA
		Open Drain NMOS 2X, V_{OL} = 0.4 V	14.541	24.740	--	mA
		Open Drain NMOS Super Drive, V_{OL} = 0.4 V	25.801	49.480	--	mA
I_{VDD}	Maximum Average or DC Current Through V_{DD} Pin (Per chip side, see Note 2)	T_J = 85 °C	--	--	45	mA
		T_J = 110 °C	--	--	22	mA
I_{GND}	Maximum Average or DC Current Through GND Pin (Per chip side, see Note 2)	T_J = 85 °C	--	--	84	mA
		T_J = 110 °C	--	--	40	mA

Downloaded from Arrow.com.

Symbol	Parameter	Condition/Note	Min.	Typ.	Max.	Unit
V_O	Maximal Voltage Applied to any PIN in High-Impedance State		--	--	V_{DD}+0.3	V
T_{SU}	Startup Time	From V_{DD} rising past PON_{THR}	--	0.3	--	ms
PON_{THR}	Power On Threshold	V_{DD} Level Required to Start Up the Chip	1.180	1.353	1.516	V
$POFF_{THR}$	Power Off Threshold	V_{DD} Level Required to Switch Off the Chip	0.730	0.914	1.103	V
R_{PULL}	Pull Up or Pull Down Resistance	1 M for Pull Up: V_{IN} = GND; for Pull Down: V_{IN} = V_{DD}	--	1	--	MΩ
		100 k for Pull Up: V_{IN} = GND; for Pull Down: V_{IN} = V_{DD}	--	100	--	kΩ
		10 k for Pull Up: V_{IN} = GND; for Pull Down: V_{IN} = V_{DD}	--	10	--	kΩ
C_{VDD}	Decoupling Capacitor	Capacitor Value at V_{DD}	--	0.1	--	µF

Note 1: DC or average current through any pin should not exceed value given in Absolute Maximum Conditions.
Note 2: The GreenPAK's power rails are divided in two sides. Pins 2, 3, 4, 5, 6, 7, 8, 9 and 10 are connected to one side, pins 12, 13, 14, 15, 16, 17, 18, 19 and 20 to another.

Downloaded from Arrow.com.

5.4 Electrical Characteristics (5 V ±10 % V_{DD})

Symbol	Parameter	Condition/Note	Min.	Typ.	Max.	Unit
V_{DD}	Supply Voltage		4.5	5.0	5.5	V
T_A	Operating Temperature		-40	25	85	°C
V_{AIR}	Analog Input Voltage Range	Positive Input	0	--	V_{DD}	V
		Negative Input	0	--	1.2	V
V_{IH}	HIGH-Level Input Voltage	Logic Input	2.640	--	--	V
		Logic Input with Schmitt Trigger	3.160	--	--	V
		Low-Level Logic Input	1.230	--	--	V
V_{IL}	LOW-Level Input Voltage	Logic Input	--	--	1.840	V
		Logic Input with Schmitt Trigger	--	--	1.510	V
		Low-Level Logic Input	--	--	0.780	V
I_{LKG}	Input Leakage (Absolute Value)		--	1	1000	nA
V_{OH}	HIGH-Level Output Voltage	Push-Pull 1X,Open Drain PMOS 1X, I_{OH} = 5 mA	4.190	4.780	--	V
		Push-Pull 2X, Open Drain PMOS 2X, I_{OH} = 5 mA	4.320	4.890	--	V
V_{OL}	LOW-Level Output Voltage	Push-Pull 1X, I_{OL}= 5 mA	--	0.157	0.270	V
		Push-Pull 2X, I_{OL}= 5 mA	--	0.076	0.130	V
		Open Drain NMOS 1X, I_{OL}= 5 mA	--	0.102	0.180	V
		Open Drain NMOS 2X, I_{OL}= 5 mA	--	0.051	0.110	V
		Open Drain NMOS 4X, I_{OL}= 5 mA	--	0.035	0.045	V
I_{OH}	HIGH-Level Output Current (see Note 1)	Push-Pull 1X, Open Drain PMOS 1X, V_{OH} = 2.4 V	22.080	34.040	--	mA
		Push-Pull 2X, Open Drain PMOS 2X, V_{OH} = 2.4 V	41.690	68.080	--	mA
I_{OL}	LOW-Level Output Current (see Note 1)	Push-Pull 1X, V_{OL} = 0.4 V	7.215	11.580	--	mA
		Push-Pull 2X, V_{OL} = 0.4 V	13.831	23.160	--	mA
		Open Drain NMOS 1X, V_{OL} = 0.4 V	10.820	17.380	--	mA
		Open Drain NMOS 2X, V_{OL} = 0.4 V	17.343	34.760	--	mA
		Open Drain NMOS Super Drive, V_{OL} = 0.4 V	30.964	69.520	--	mA
I_{VDD}	Maximum Average or DC Current Through V_{DD} Pin (Per chip side, see Note 2)	T_J = 85 °C	--	--	45	mA
		T_J = 110 °C	--	--	22	mA
I_{GND}	Maximum Average or DC Current Through GND Pin (Per chip side, see Note 2)	T_J = 85 °C	--	--	84	mA
		T_J = 110 °C	--	--	40	mA

Downloaded from Arrow.com.

Symbol	Parameter	Condition/Note	Min.	Typ.	Max.	Unit
V_O	Maximal Voltage Applied to any PIN in High-Impedance State		--	--	V_{DD}+0.3	V
T_{SU}	Startup Time	From V_{DD} rising past PON_{THR}	--	0.3	--	ms
PON_{THR}	Power On Threshold	V_{DD} Level Required to Start Up the Chip	1.180	1.353	1.516	V
$POFF_{THR}$	Power Off Threshold	V_{DD} Level Required to Switch Off the Chip	0.730	0.914	1.103	V
R_{PULL}	Pull Up or Pull Down Resistance	1 M for Pull Up: V_{IN} = GND; for Pull Down: V_{IN} = V_{DD}	--	1	--	MΩ
		100 k for Pull Up: V_{IN} = GND; for Pull Down: V_{IN} = V_{DD}	--	100	--	kΩ
		10 k for Pull Up: V_{IN} = GND; for Pull Down: V_{IN} = V_{DD}	--	10	--	kΩ
C_{VDD}	Decoupling Capacitor	Capacitor Value at V_{DD}	--	0.1	--	µF

Note 1: DC or average current through any pin should not exceed value given in Absolute Maximum Conditions.
Note 2: The GreenPAK's power rails are divided in two sides. Pins 2, 3, 4, 5, 6, 7, 8, 9 and 10 are connected to one side, pins 12, 13, 14, 15, 16, 17, 18, 19 and 20 to another.

Downloaded from Arrow.com.

5.5 IDD Estimator

Table 1. Typical Current estimated for each macrocell.

Symbol	Parameter	Note	V_{DD} = 1.8 V	V_{DD} = 3.3 V	V_{DD} = 5.0 V	Unit
I	Current	Chip Quiescent	0.29	0.54	0.84	µA
		Vref	64	78	75	µA
		Vref Buffer (each)	0.5	12	12	µA
		OSC 25 kHz, predivide = 1	3.4	5.1	7	µA
		OSC 2 MHz, predivide = 1	44	85	135	µA
		OSC 2 MHz, predivide = 8	23	33	41	µA
		1x push-pull + 4 pF @ 25 kHz	0.4	5	16	µA
		1x push-pull + 4 pF @ 2 MHz	22	47	106	µA
		1st ACMP used (includes Vref)	73	86	81	µA
		Each additional ACMP add	3.7	4.1	4.8	µA

5.6 Timing Estimator

Table 2. Typical Delay estimated for each macrocell.

Symbol	Parameter	Note	V_{DD} = 1.8 V		V_{DD} = 3.3 V		V_{DD} = 5.0 V		Unit
			rising	falling	rising	falling	rising	falling	
tpd	Delay	Digital Input without Schmitt Trigger	42	45	17	19	12	13	ns
tpd	Delay	Digital Input with Schmitt Trigger	42	43	16	17	18	12	ns
tpd	Delay	Low Voltage Digital input	45	428	17	177	12	120	ns
tpd	Delay	Digital input-- PMOS	42	-	17	-	12	-	ns
tpd	Delay	Digital input-- NMOS	-	80	-	27	-	18	ns
tpd	Delay	Output enable from pin, OE Hi-Z to 1	53	-	21	-	15	-	ns
tpd	Delay	Output enable from pin, OE Hi-Z to 0	50	-	20	-	14	-	ns
tpd	Delay	LUT2bit(LATCH)	34	33	14	13	10	9	ns
tpd	Delay	LATCH(LUT2bit)	30	34	14	13	10	9	ns
tpd	Delay	LUT3bit(LATCH)	38	37	18	15	13	10	ns
tpd	Delay	LATCH+nRESET(LUT3bit)	45	42	21	17	15	12	ns
tpd	Delay	LUT4bit	28	33	14	13	10	9	ns
tpd	Delay	LUT2bt	19	26	10	10	7	7	ns
tpd	Delay	LUT3bit	28	34	14	13	10	9	ns
tpd	Delay	CNT/DLY	40	38	18	15	13	11	ns
tpd	Delay	P_DLY1C	380	377	166	163	123	120	ns
tpd	Delay	P_DLY2C	720	718	314	312	233	231	ns
tpd	Delay	P_DLY3C	1061	1060	462	460	343	341	ns
tpd	Delay	P_DLY4C	1396	1400	609	609	451	451	ns
tpd	Delay	Filter	200	200	78	78	53	53	ns
tpd	Delay	ACMP (5 mV across inputs)	3000	3000	2000	2000	2000	2000	ns
tw	width	I/O with 1X push pull (min transmitted)	20	20	20	20	20	20	ns
tw	width	filter (min transmitted)	150	150	55	55	35	35	ns

© 2023 Renesas Electronics Corporation

Downloaded from Arrow.com.

5.7 Typical Counter/Delay Offset Measurements

Table 3. Typical Counter/Delay Offset Measurements.

Parameter	RC OSC Freq	RC OSC Power	V_{DD} = 1.8 V	V_{DD} = 3.3 V	V_{DD} = 5.0 V	Unit
offset	25 kHz	auto	19	14	12	µs
offset	2 MHz	auto	7	4	4	µs
frequency settling time	25 kHz	auto	19	14	12	µs
frequency settling time	2 MHz	auto	14	14	14	µs
variable (CLK period)	25 kHz	forced	0-40	0-40	0-40	µs
variable (CLK period)	2 MHz	forced	0-0.5	0-0.5	0-0.5	µs
tpd (non-delayed edge)	25 kHz/ 2 MHz	either	35	14	10	ns

5.8 Expected Delays and Widths

Table 4. Expected Delays and Widths for Programmable Delay (typical).

Symbol	Parameter	Note	V_{DD} = 1.8 V	V_{DD} = 3.3 V	V_{DD} = 5.0 V	Unit
time1	Width, 1 cell	mode:(any)edge detect, edge detect output	325	150	110	ns
time1	Width, 2 cell	mode:(any)edge detect, edge detect output	740	300	225	ns
time1	Width, 3 cell	mode:(any)edge detect, edge detect output	1020	450	340	ns
time1	Width, 4 cell	mode:(any)edge detect, edge detect output	1350	600	450	ns
time2	Delay, 1 cell	mode:(any)edge detect, edge detect output	44	18	14	ns
time2	Delay, 2 cell	mode:(any)edge detect, edge detect output	44	18	14	ns
time2	Delay, 3 cell	mode:(any)edge detect, edge detect output	44	18	14	ns
time2	Delay, 4 cell	mode:(any)edge detect, edge detect output	44	18	14	ns
time1	Width, 1 cell	mode: delayed (any)edge detect, delayed edge detect output	340	150	110	ns
time1	Width, 2 cell	mode: delayed (any)edge detect, delayed edge detect output	670	300	220	ns
time1	Width, 3 cell	mode: delayed (any)edge detect, delayed edge detect output	1000	450	335	ns
time1	Width, 4 cell	mode: delayed (any)edge detect, delayed edge detect output	1340	600	450	ns
time2	Delay, 1 cell	mode: delayed (any)edge detect, delayed edge detect output	570	220	140	ns
time2	Delay, 2 cell	mode: delayed (any)edge detect, delayed edge detect output	570	220	140	ns
time2	Delay, 3 cell	mode: delayed (any)edge detect, delayed edge detect output	570	220	140	ns
time2	Delay, 4 cell	mode: delayed (any)edge detect, delayed edge detect output	570	220	140	ns
time2	Delay, 1 cell	mode: both edge delay, edge detect output	382	375	126	ns
time2	Delay, 2 cell	mode: both edge delay, edge detect output	713	169	237	ns
time2	Delay, 3 cell	mode: both edge delay, edge detect output	1045	318	350	ns
time2	Delay, 4 cell	mode: both edge delay, edge detect output	1370	466	460	ns
time2	Delay, 1 cell	mode: both edge delay, delayed edge detect output	900	613	250	ns
time2	Delay, 2 cell	mode: both edge delay, delayed edge detect output	1250	520	360	ns

Downloaded from Arrow.com.

Table 4. Expected Delays and Widths for Programmable Delay (typical).

Symbol	Parameter	Note	V_{DD} = 1.8 V	V_{DD} = 3.3 V	V_{DD} = 5.0 V	Unit
time2	Delay, 3 cell	mode: both edge delay, delayed edge detect output	1600	680	480	ns
time2	Delay, 4 cell	mode: both edge delay, delayed edge detect output	1900	815	600	ns

5.9 Typical Pulse Width Performance

Table 5. Typical Pulse Width Performance.

Parameter	V_{DD} = 1.8 V	V_{DD} = 3.3 V	V_{DD} = 5.0 V	Unit
Filtered Pulse Width	< 150	< 55	< 35	ns

Downloaded from Arrow.com.

6.0 Summary of Macrocell Function

6.1 I/O Pins

- Digital Input (low voltage or normal voltage, with or without Schmitt Trigger)
- Open Drain Outputs
- Push Pull Outputs
- Analog I/O
- 10 kΩ/100 kΩ/1 MΩ pull-up/pull-down resistors
- 40 mA Open Drain Superdrive output

6.2 Connection Matrix

- Digital matrix for circuit connections based on user design

6.3 Analog Comparators (4 total)

- Selectable hysteresis 0 mV/25 mV/50 mV/200 mV

6.4 Voltage Reference

- Used for references on Analog Comparators
- Can also be driven to external pins

6.5 Combinational Logic Look Up Tables (LUTs – 9 total)

- Two 2-bit Lookup Tables
- Seven 3-bit Lookup Tables

6.6 Combination Function Macrocells (9 total)

- Four Selectable DFF/Latch or 2-bit LUTs
- Two Selectable DFF/Latch or 3-bit LUTs
- One Selectable Pipe Delay or 3-bit LUT
- Two Selectable CNT/DLY or 4-bit LUTs

6.7 Delays/Counters (5 total)

- One 14-bit delay/counter: Range 1-16384 clock cycles
- One 14-bit delay/counter with external clock/reset: Range 1-16384 clock cycles
- Three 8-bit delays/counters: Range 1-255 clock cycles

6.8 Pipe Delay (Part of Combination Function Macrocell)

- 16 stage / 3 output
- One 1 stage fixed output
- Two 1-16 stage selectable outputs.

6.9 Programmable Delay

- 125 ns/250 ns/375 ns/500 ns @ 3.3 V
- Includes Edge Detection function

6.10 Additional Logic Functions (4 total)

- Two Inverter macrocells
- Two Deglitch filter macrocells

© 2023 Renesas Electronics Corporation

Downloaded from Arrow.com.

6.11 RC Oscillator

- 25 kHz and 2 MHz selectable frequency
- First stage divider (4): OSC/1, OSC/2, OSC/4, and OSC/8
- Second stage divider (5): OSC/1, OSC/4, selectable (OSC/8, OSC/12, OSC/24, or OSC/64), OSC/3, and additional OSC/3 (from selectable output)

Downloaded from Arrow.com.

7.0 I/O Pins

The SLG46721 has a total of 18 multi-function I/O pins which can function as either a user defined Input or Output, as well as serving as a special function (such as outputting the voltage reference), or serving as a signal for programming of the on-chip Non Volatile Memory (NVM).

Normal Mode pin definitions are as follows:

- Pin 1: V_{DD} power supply
- Pin 2: general purpose input
- Pin 3: general purpose input or output with OE
- Pin 4: general purpose input or output
- Pin 5: general purpose input or output with OE
- Pin 6: general purpose input or output or analog comparator 0(+)
- Pin 7: general purpose input or output with OE or analog comparator 0(-)
- Pin 8: general purpose input or output
- Pin 9: general purpose input or output with OE
- Pin 10: general purpose input or output or analog comparator 1(+)
- Pin 11: ground
- Pin 12: general purpose input or output or analog comparator 1(-)
- Pin 13: general purpose input or output with OE or analog comparator 2(+)
- Pin 14: general purpose input or output with OE or analog comparator 2(-)
- Pin 15: general purpose input or output or analog comparator 3(+)
- Pin 16: general purpose input or output with OE
- Pin 17: general purpose input or output
- Pin 18: general purpose input or output with OE and Vref output (VREF2)
- Pin 19: general purpose input or output with OE and Vref output (VREF1)
- Pin 20: general purpose input or output or external clock input

Programming Mode pin definitions are as follows:

- Pin 1: V_{DD} power supply
- Pin 2: V_{PP} programming voltage
- Pin 11: ground
- Pin 16: programming mode control
- Pin 17: programming ID pin
- Pin 18: programming SDIO pin
- Pin 19: programming SRDWB pin
- Pin 20: programming SCL pin

Of the 18 user defined I/O pins on the SLG46721, all but one of the pins (Pin 2) can serve as both digital input and digital output. Pin 2 can only serve as a digital input pin.

7.1 Input Modes

Each I/O pin can be configured as a digital input pin with/without buffered Schmitt Trigger, or can also be configured as a low voltage digital input. Pins 6, 7, 10, 12, 13, 14, and 15 can also be configured to serve as analog inputs to the on-chip comparators. Pins 18 and 19 can also be configured as analog reference voltage inputs.

7.2 Output Modes

Pins 3, 4, 5, 6, 7, 8, 9, 10, 12, 13, 14, 15, 16, 17, 18, 19, and 20 can all be configured as digital output pins.

7.3 Pull Up/Down Resistors

All I/O pins have the option for user selectable resistors connected to the input structure. The selectable values on these resistors are 10 kΩ, 100 kΩ and 1 MΩ. In the case of Pin 2, the resistors are fixed to a pull-down configuration. In the case of all other I/O pins, the internal resistors can be configured as either pull-up or pull-downs.

© 2023 Renesas Electronics Corporation

Downloaded from Arrow.com.

7.4 I/O Register Settings

7.4.1 PIN 2 Register Settings

Table 6. PIN 2 Register Settings

Signal Function	Register Bit Address	Register Definition
PIN 2 Mode Control	<830:829>	00: Digital Input without Schmitt Trigger 01: Digital Input with Schmitt Trigger 10: Low Voltage Digital Input 11: Reserved
PIN 2 Pull Down Resistor Value Selection	<832:831>	00: Floating 01: 10 kΩ Resistor 10: 100 kΩ Resistor 11: 1 MΩ Resistor

7.4.2 PIN 3 Register Settings

Table 7. PIN 3 Register Settings

Signal Function	Register Bit Address	Register Definition
PIN 3 Mode Control (sig_pin3_oe =0)	<834:833>	00: Digital Input without Schmitt Trigger 01: Digital Input with Schmitt Trigger 10: Low Voltage Digital Input 11: Reserved
PIN 3 Mode Control (sig_pin3_oe =1)	<836:835>	00: Push Pull 1X 01: Push Pull 2X 10: Open Drain NMOS 1X 11: Open Drain NMOS 2X
PIN 3 Pull Up/Down Resistor Value Selection	<838:837>	00: Floating 01: 10 kΩ Resistor 10: 100 kΩ Resistor 11: 1 MΩ Resistor
PIN 3 Pull Up/Down Resistor Selection	<839>	0: Pull Down Resistor 1: Pull Up Resistor

© 2023 Renesas Electronics Corporation

Downloaded from Arrow.com.

7.4.3 PIN 4 Register Settings

Table 8. PIN 4 Register Settings

Signal Function	Register Bit Address	Register Definition
PIN 4 Mode Control	<842:840>	000: Digital Input without Schmitt Trigger 001: Digital Input with Schmitt Trigger 010: Low Voltage Digital Input 011: Reserved 100: Push Pull 101: Open Drain NMOS 110: Open Drain PMOS 111: Open Drain NMOS
PIN 4 Pull Up/Down Resistor Value Selection	<844:843>	00: Floating 01: 10 kΩ Resistor 10: 100 kΩ Resistor 11: 1 MΩ Resistor
PIN 4 Pull Up/Down Resistor Selection	<845>	0: Pull Down Resistor 1: Pull Up Resistor
PIN 4 Driver Strength Selection	<846>	0: 1X 1: 2X

7.4.4 PIN 5 Register Settings

Table 9. PIN 5 Register Settings

Signal Function	Register Bit Address	Register Definition
PIN 5 Mode Control (sig_pin5_oe =0)	<848:847>	00: Digital Input without Schmitt Trigger 01: Digital Input with Schmitt Trigger 10: Low Voltage Digital Input 11: Reserved
PIN 5 Mode Control (sig_pin5_oe =1)	<850:849>	00: Push Pull 1X 01: Push Pull 2X 10: Open Drain NMOS 1X 11: Open Drain NMOS 2X
PIN 5 Pull Up/Down Resistor Value Selection	<852:851>	00: Floating 01: 10 kΩ Resistor 10: 100 kΩ Resistor 11: 1 MΩ Resistor
PIN 5 Pull Up/Down Resistor Selection	<853>	0: Pull Down Resistor 1: Pull Up Resistor

© 2023 Renesas Electronics Corporation

Downloaded from Arrow.com.

7.4.5 PIN 6 Register Settings

Table 10. PIN 6 Register Settings

Signal Function	Register Bit Address	Register Definition
PIN 6 Mode Control	<856:854>	000: Digital Input without Schmitt Trigger 001: Digital Input with Schmitt Trigger 010: Low Voltage Digital Input 011: Analog Input/Output 100: Push Pull 101: Open Drain NMOS 110: Open Drain PMOS 111: Analog Input & Open Drain
PIN 6 Pull Up/Down Resistor Value Selection	<858:857>	00: Floating 01: 10 kΩ Resistor 10: 100 kΩ Resistor 11: 1 MΩ Resistor
PIN 6 Pull Up/Down Resistor Selection	<859>	0: Pull Down Resistor 1: Pull Up Resistor
PIN 6 Driver Strength Selection	<860>	0: 1X 1: 2X

7.4.6 PIN 7 Register Settings

Table 11. PIN 7 Register Settings

Signal Function	Register Bit Address	Register Definition
PIN 7 Mode Control (sig_pin7_oe =0)	<862:861>	00: Digital Input without Schmitt Trigger 01: Digital Input with Schmitt Trigger 10: Low Voltage Digital Input 11: Analog Input/Output
PIN 7 Mode Control (sig_pin7_oe =1)	<864:863>	00: Push Pull 1X 01: Push Pull 2X 10: Open Drain NMOS 1X 11: Open Drain NMOS 2X
PIN 7 Pull Up/Down Resistor Value Selection	<866:865>	00: Floating 01: 10 kΩ Resistor 10: 100 kΩ Resistor 11: 1 MΩ Resistor
PIN 7 Pull Up/Down Resistor Selection	<867>	0: Pull Down Resistor 1: Pull Up Resistor

© 2023 Renesas Electronics Corporation

Downloaded from Arrow.com.

7.4.7 PIN 8 Register Settings

Table 12. PIN 8 Register Settings

Signal Function	Register Bit Address	Register Definition
PIN 8 Mode Control	<870:868>	000: Digital Input without Schmitt Trigger 001: Digital Input with Schmitt Trigger 010: Low Voltage Digital Input 011: Reserved 100: Push Pull 101: Open Drain NMOS 110: Open Drain PMOS 111: Open Drain NMOS
PIN 8 Pull Up/Down Resistor Value Selection	<872:871>	00: Floating 01: 10 kΩ Resistor 10: 100 kΩ Resistor 11: 1 MΩ Resistor
PIN 8 Pull Up/Down Resistor Selection	<873>	0: Pull Down Resistor 1: Pull Up Resistor
PIN 8 Driver Strength Selection	<874>	0: 1X 1: 2X

7.4.8 PIN 9 Register Settings

Table 13. PIN 9 Register Settings

Signal Function	Register Bit Address	Register Definition
PIN 9 Mode Control (sig_pin9_oe =0)	<876:875>	00: Digital Input without Schmitt Trigger 01: Digital Input with Schmitt Trigger 10: Low Voltage Digital Input 11: Reserved
PIN 9 Mode Control (sig_pin9_oe =1)	<878:877>	00: Push Pull 1X 01: Push Pull 2X 10: Open Drain NMOS 1X 11: Open Drain NMOS 2X
PIN 9 Pull Up/Down Resistor Value Selection	<880:879>	00: Floating 01: 10 kΩ Resistor 10: 100 kΩ Resistor 11: 1 MΩ Resistor
PIN 9 Pull Up/Down Resistor Selection	<881>	0: Pull Down Resistor 1: Pull Up Resistor

© 2023 Renesas Electronics Corporation

Downloaded from Arrow.com.

7.4.9 PIN 10 Register Settings

Table 14. PIN 10 Register Settings

Signal Function	Register Bit Address	Register Definition
PIN 10 Mode Control	<884:882>	000: Digital Input without Schmitt Trigger 001: Digital Input with Schmitt Trigger 010: Low Voltage Digital Input 011: Analog Input/Output 100: Push Pull 101: Open Drain NMOS 110: Open Drain PMOS 111: Analog Input & Open Drain
PIN 10 Pull Up/Down Resistor Value Selection	<886:885>	00: Floating 01: 10 kΩ Resistor 10: 100 kΩ Resistor 11: 1 MΩ Resistor
PIN 10 Pull Up/Down Resistor Selection	<887>	0: Pull Down Resistor 1: Pull Up Resistor
PIN 10 Driver Strength Selection	<888>	0: 1X 1: 2X
PIN 10 Super Drive (4X, NMOS Open Drain) Selection	<889>	0: Super Drive Off 1: Super Drive On (if <884:882> = ‘101’)

7.4.10 PIN 12 Register Settings

Table 15. PIN 12 Register Settings

Signal Function	Register Bit Address	Register Definition
PIN 12 Mode Control	<892:890>	000: Digital Input without Schmitt Trigger 001: Digital Input with Schmitt Trigger 010: Low Voltage Digital Input 011: Analog Input/Output 100: Push Pull 101: Open Drain NMOS 110: Open Drain PMOS 111: Analog Input & Open Drain
PIN 12 Pull Up/Down Resistor Value Selection	<894:893>	00: Floating 01: 10 kΩ Resistor 10: 100 kΩ Resistor 11: 1 MΩ Resistor
PIN 12 Pull Up/Down Resistor Selection	<895>	0: Pull Down Resistor 1: Pull Up Resistor
PIN 12 Driver Strength Selection	<896>	0: 1X 1: 2X
PIN 12 Super Drive (4X, NMOS Open Drain) Selection	<897>	0: Super Drive Off 1: Super Drive On (if <892:890> = ‘101’)

© 2023 Renesas Electronics Corporation

Downloaded from Arrow.com.

7.4.11 PIN 13 Register Settings

Table 16. PIN 13 Register Settings

Signal Function	Register Bit Address	Register Definition
PIN 13 Mode Control (sig_pin13_oe =0)	<899:898>	00: Digital Input without Schmitt Trigger 01: Digital Input with Schmitt Trigger 10: Low Voltage Digital Input 11: Analog Input/Output
PIN 13 Mode Control (sig_pin13_oe =1)	<901:900>	00: Push Pull 1X 01: Push Pull 2X 10: Open Drain NMOS 1X 11: Open Drain NMOS 2X
PIN 13 Pull Up/Down Resistor Value Selection	<903:902>	00: Floating 01: 10 kΩ Resistor 10: 100 kΩ Resistor 11: 1 MΩ Resistor
PIN 13 Pull Up/Down Resistor Selection	<904>	0: Pull Down Resistor 1: Pull Up Resistor

7.4.12 PIN 14 Register Settings

Table 17. PIN 14 Register Settings

Signal Function	Register Bit Address	Register Definition
PIN 14 Mode Control (sig_pin14_oe =0)	<906:905>	00: Digital Input without Schmitt Trigger 01: Digital Input with Schmitt Trigger 10: Low Voltage Digital Input 11: Analog Input/Output
PIN 14 Mode Control (sig_pin14_oe =1)	<908:907>	00: Push Pull 1X 01: Push Pull 2X 10: Open Drain NMOS 1X 11: Open Drain NMOS 2X
PIN 14 Pull Up/Down Resistor Value Selection	<910:909>	00: Floating 01: 10 kΩ Resistor 10: 100 kΩ Resistor 11: 1 MΩ Resistor
PIN 14 Pull Up/Down Resistor Selection	<911>	0: Pull Down Resistor 1: Pull Up Resistor

© 2023 Renesas Electronics Corporation

Downloaded from Arrow.com.

7.4.13 PIN 15 Register Settings

Table 18. PIN 15 Register Settings

Signal Function	Register Bit Address	Register Definition
PIN 15 Mode Control	<914:912>	000: Digital Input without Schmitt Trigger 001: Digital Input with Schmitt Trigger 010: Low Voltage Digital Input 011: Analog Input/Output 100: Push Pull 101: Open Drain NMOS 110: Open Drain PMOS 111: Analog Input & Open Drain
PIN 15 Pull Up/Down Resistor Value Selection	<916:915>	00: Floating 01: 10 kΩ Resistor 10: 100 kΩ Resistor 11: 1 MΩ Resistor
PIN 15 Pull Up/Down Resistor Selection	<917>	0: Pull Down Resistor 1: Pull Up Resistor
PIN 15 Driver Strength Selection	<918>	0: 1X 1: 2X

7.4.14 PIN 16 Register Settings

Table 19. PIN 16 Register Settings

Signal Function	Register Bit Address	Register Definition
PIN 16 Mode Control (sig_pin16_oe =0)	<920:919>	00: Digital Input without Schmitt Trigger 01: Digital Input with Schmitt Trigger 10: Low Voltage Digital Input 11: Reserved
PIN 16 Mode Control (sig_pin16_oe =1)	<922:921>	00: Push Pull 1X 01: Push Pull 2X 10: Open Drain NMOS 1X 11: Open Drain NMOS 2X
PIN 16 Pull Up/Down Resistor Value Selection	<924:923>	00: Floating 01: 10 kΩ Resistor 10: 100 kΩ Resistor 11: 1 MΩ Resistor
PIN 16 Pull Up/Down Resistor Selection	<925>	0: Pull Down Resistor 1: Pull Up Resistor

Downloaded from Arrow.com.

7.4.15 PIN 17 Register Settings

Table 20. PIN 17 Register Settings

Signal Function	Register Bit Address	Register Definition
PIN 17 Mode Control	<928:926>	000: Digital Input without Schmitt Trigger 001: Digital Input with Schmitt Trigger 010: Low Voltage Digital Input 011: Reserved 100: Push Pull 101: Open Drain NMOS 110: Open Drain PMOS 111: Open Drain NMOS
PIN 17 Pull Up/Down Resistor Value Selection	<930:929>	00: Floating 01: 10 kΩ Resistor 10: 100 kΩ Resistor 11: 1 MΩ Resistor
PIN 17 Pull Up/Down Resistor Selection	<931>	0: Pull Down Resistor 1: Pull Up Resistor
PIN 17 Driver Strength Selection	<932>	0: 1X 1: 2X

7.4.16 PIN 18 Register Settings

Table 21. PIN 18 Register Settings

Signal Function	Register Bit Address	Register Definition
PIN 18 Mode Control (sig_pin18_oe =0)	<934:933>	00: Digital Input without Schmitt Trigger 01: Digital Input with Schmitt Trigger 10: Low Voltage Digital Input 11: Analog Input/Output
PIN 18 Mode Control (sig_pin18_oe =1)	<936:935>	00: Push Pull 1X 01: Push Pull 2X 10: Open Drain NMOS 1X 11: Open Drain NMOS 2X
PIN 18 Pull Up/Down Resistor Value Selection	<938:937>	00: Floating 01: 10 kΩ Resistor 10: 100 kΩ Resistor 11: 1 MΩ Resistor
PIN 18 Pull Up/Down Resistor Selection	<939>	0: Pull Down Resistor 1: Pull Up Resistor

Downloaded from Arrow.com.

7.4.17 PIN 19 Register Settings

Table 22. PIN 19 Register Settings

Signal Function	Register Bit Address	Register Definition
PIN 19 Mode Control (sig_pin19_oe =0)	<941:940>	00: Digital Input without Schmitt Trigger 01: Digital Input with Schmitt Trigger 10: Low Voltage Digital Input 11: Analog Input/Output
PIN 19 Mode Control (sig_pin18_oe =1)	<943:942>	00: Push Pull 1X 01: Push Pull 2X 10: Open Drain NMOS 1X 11: Open Drain NMOS 2X
PIN 19 Pull Up/Down Resistor Value Selection	<945:944>	00: Floating 01: 10 kΩ Resistor 10: 100 kΩ Resistor 11: 1 MΩ Resistor
PIN 19 Pull Up/Down Resistor Selection	<946>	0: Pull Down Resistor 1: Pull Up Resistor

7.4.18 PIN 20 Register Settings

Table 23. PIN 20 Register Settings

Signal Function	Register Bit Address	Register Definition
PIN 20 Mode Control	<949:947>	000: Digital Input without Schmitt Trigger 001: Digital Input with Schmitt Trigger 010: Low Voltage Digital Input 011: Reserved 100: Push Pull 101: Open Drain NMOS 110: Open Drain PMOS 111: Open Drain NMOS
PIN 20 Pull Up/Down Resistor Value Selection	<951:950>	00: Floating 01: 10 kΩ Resistor 10: 100 kΩ Resistor 11: 1 MΩ Resistor
PIN 20 Pull Up/Down Resistor Selection	<952>	0: Pull Down Resistor 1: Pull Up Resistor
PIN 20 Driver Strength Selection	<953>	0: 1X 1: 2X

Downloaded from Arrow.com.

7.5 GPI Structure

7.5.1 GPI Structure (for Pin 2)

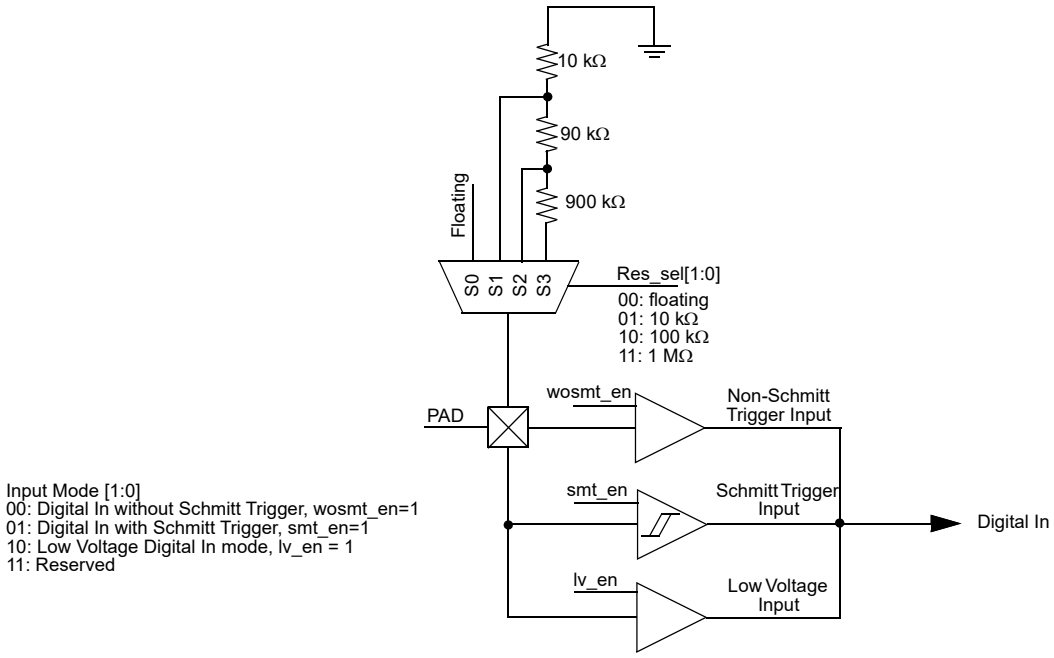

Figure 2. PIN 2 GPI Structure Diagram

Downloaded from Arrow.com.

7.6 Matrix OE IO Structure

7.6.1 Matrix OE IO Structure (for Pins 3, 5, 7, 9, 13, 14, 16, 18, 19)

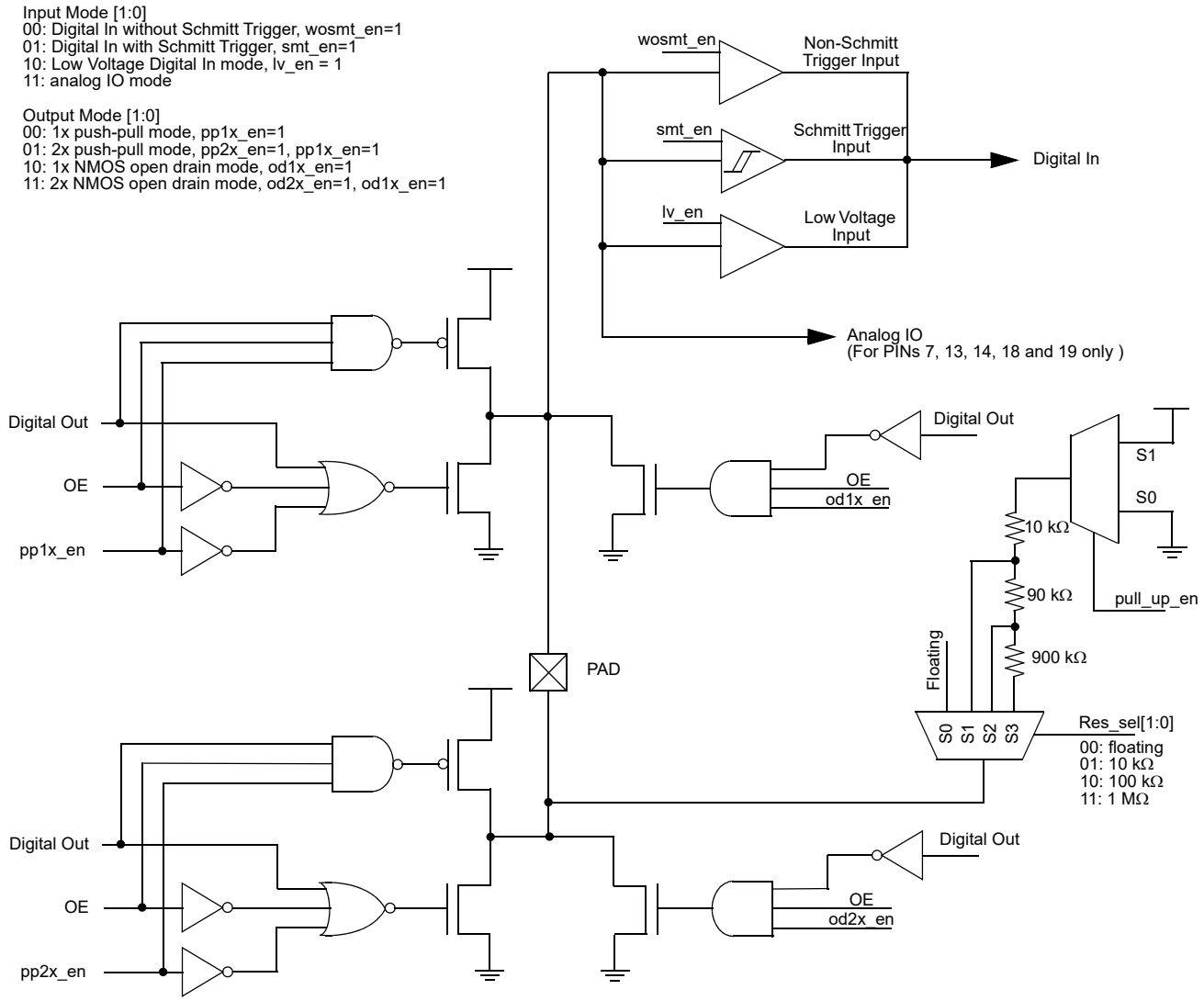

Figure 3. Matrix OE IO Structure Diagram

Downloaded from Arrow.com.

7.7 Register OE IO Structure

7.7.1 Register OE IO Structure (for Pins 4, 6, 8, 15, 17, 20)

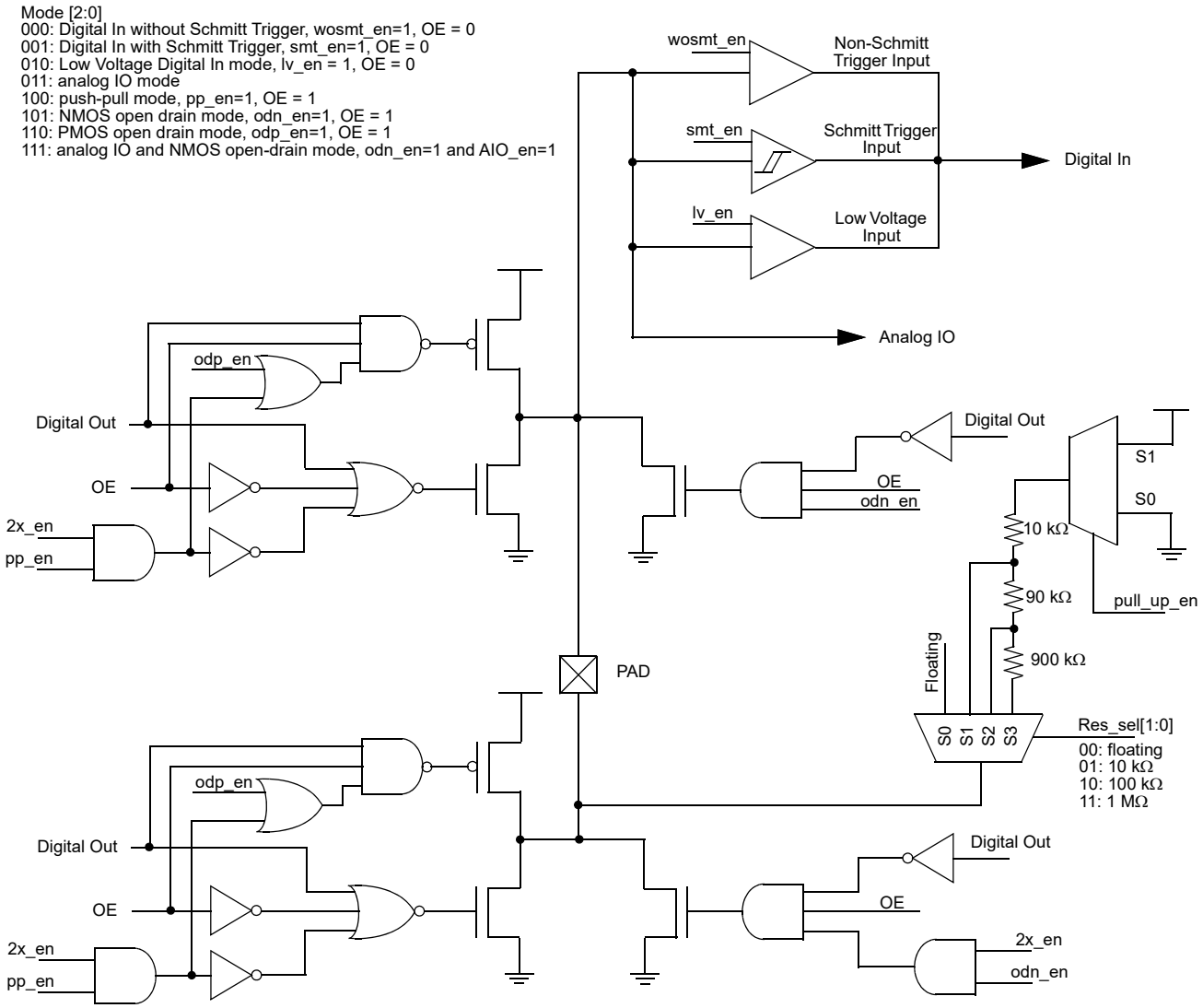

Figure 4. Register OE IO Structure Diagram

Downloaded from Arrow.com.

7.8 Register OE IO Structure with Super Driver

7.8.1 Register OE IO Structure with Super Driver (for Pins 10, 12)

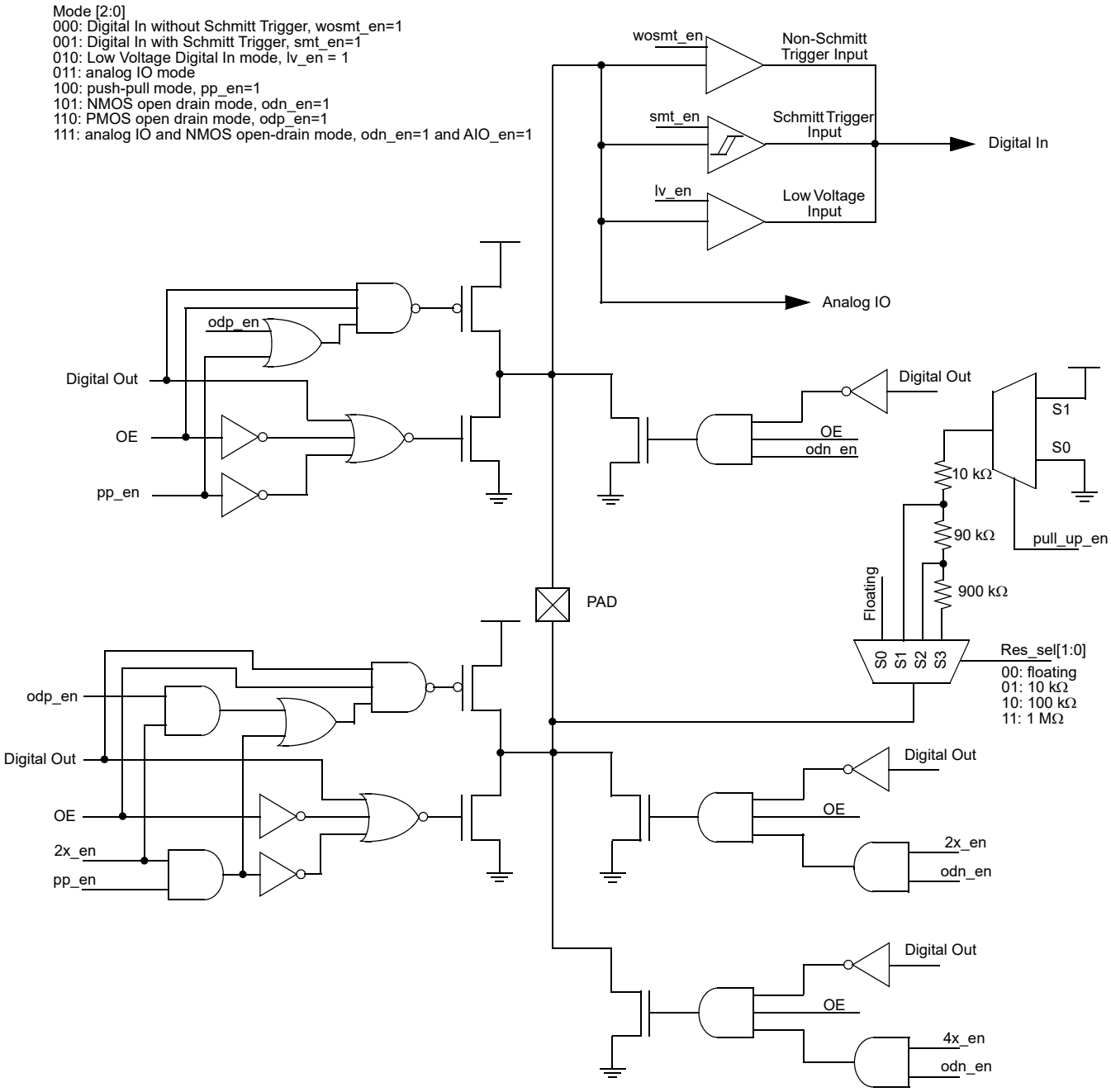

Figure 5. Register OE IO with Super Driver Structure Diagram

Downloaded from Arrow.com.

8.0 Connection Matrix

The Connection Matrix in the SLG46721 is used to create the internal routing for internal functions of the device once it is programmed. The registers are programmed from the one-time NVM cell during Test Mode Operation. All of the connection point for each logic cell within the SLG46721 has a specific digital bit code assigned to it that is either set to active “High” or inactive “Low” based on the design that is created. Once the 1024 register bits within the SLG46721 are programmed a fully custom circuit will be created.

The Connection Matrix has 64 inputs and 92 outputs. Each of the 64 inputs to the Connection Matrix is hard-wired to a particular source macrocell, including I/O pins, LUTs, analog comparators, other digital resources and V_{DD} and V_{SS}. The input to a digital macrocell uses a 6-bit register to select one of these 64 input lines.

For a complete list of the SLG46721’s register table, see Section 20.0 Appendix A - SLG46721 Register Definition.

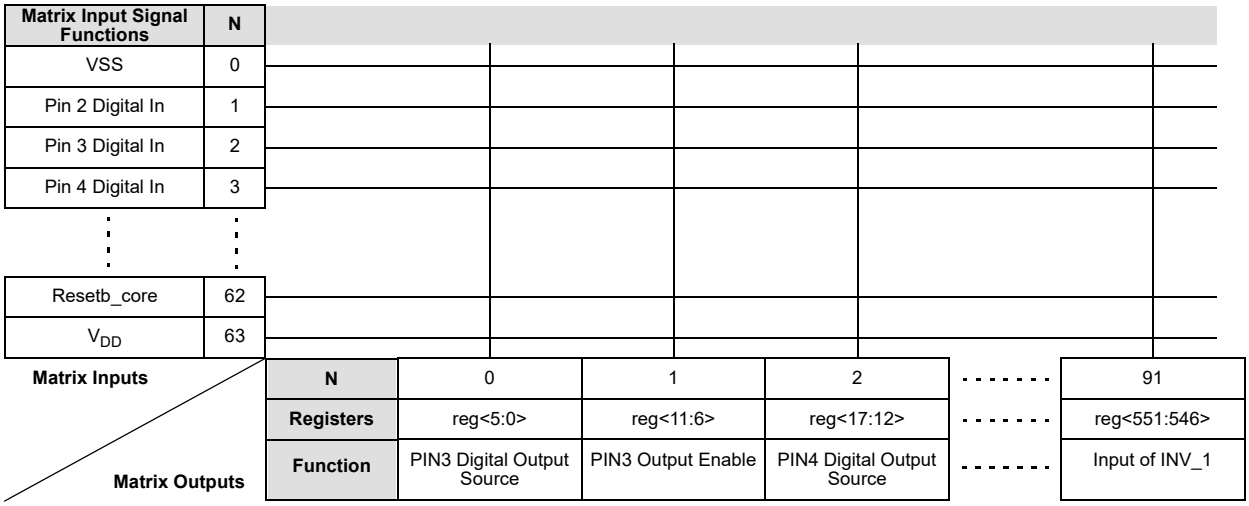

Figure 6. Connection Matrix

Downloaded from Arrow.com.

8.1 Matrix Input Table

Table 24. Matrix Input Table

N	Matrix Input Signal Function	Matrix Decode					
		5	4	3	2	1	0
0	VSS	0	0	0	0	0	0
1	pin2 digital input	0	0	0	0	0	1
2	pin3 digital input	0	0	0	0	1	0
3	pin4 digital input	0	0	0	0	1	1
4	pin5 digital input	0	0	0	1	0	0
5	pin6 digital input	0	0	0	1	0	1
6	pin7 digital input	0	0	0	1	1	0
7	pin8 digital input	0	0	0	1	1	1
8	pin9 digital input	0	0	1	0	0	0
9	pin10 digital input	0	0	1	0	0	1
10	ACMP_0 output	0	0	1	0	1	0
11	ACMP_1 output	0	0	1	0	1	1
12	ACMP_2 output	0	0	1	1	0	0
13	CNT_DLY0(14bit) output	0	0	1	1	0	1
14	CNT_DLY1(14bit with ext CK/Reset) output	0	0	1	1	1	0
15	CNT_DLY4(8 bit) output	0	0	1	1	1	1
16	CNT_DLY5(8 bit) output	0	1	0	0	0	0
17	CNT_DLY6(8 bit) output	0	1	0	0	0	1
18	ACMP_3 output	0	1	0	0	1	0
19	Inverting of DFF/LATCH_2 output	0	1	0	0	1	1
20	VSS (spare)	0	1	0	1	0	0
21	Inverting of DFF/LATCH_3 output	0	1	0	1	0	1
22	LUT4_0 output (CNT_DLY2 output (8 bit w/ ext CK,reset))	0	1	0	1	1	0
23	LUT4_1 output (CNT_DLY3 output (8 bit w/ ext CK,reset))	0	1	0	1	1	1
24	LUT3_0 output	0	1	1	0	0	0
25	LUT3_1 output	0	1	1	0	0	1
26	LUT3_2 output (DFF/LATCH_2 output with resetb or setb)	0	1	1	0	1	0
27	LUT3_3 output (DFF/LATCH_3 output with resetb or setb)	0	1	1	0	1	1
28	LUT3_4 output	0	1	1	1	0	0
29	LUT3_5 output	0	1	1	1	0	1
30	LUT3_6 output	0	1	1	1	1	0
31	LUT3_7 output	0	1	1	1	1	1
32	LUT3_8 output(1st stage pipe 1 delay output)	1	0	0	0	0	0
33	LUT2_0 output (DFF/LATCH_4 output)	1	0	0	0	0	1
34	LUT2_1 output (DFF/LATCH_5 output)	1	0	0	0	1	0
35	LUT2_2 output (DFF/LATCH_6 output)	1	0	0	0	1	1
36	LUT2_3 output (DFF/LATCH_7 output)	1	0	0	1	0	0
37	LUT2_4 output	1	0	0	1	0	1

© 2023 Renesas Electronics Corporation

Downloaded from Arrow.com.

Table 24. Matrix Input Table

N	Matrix Input Signal Function	Matrix Decode					
		5	4	3	2	1	0
38	LUT2_5 output	1	0	0	1	1	0
39	LUT3_9 output	1	0	0	1	1	1
40	pipe1 delay output0	1	0	1	0	0	0
41	pipe1 delay output1	1	0	1	0	0	1
42	filter_0 output	1	0	1	0	1	0
43	Edge detect output	1	0	1	0	1	1
44	Programmable delay with edge detector output	1	0	1	1	0	0
45	internal oscillator output	1	0	1	1	0	1
46	internal oscillator divided by 4 output	1	0	1	1	1	0
47	internal oscillator divided by 8, 12, 24, 64 output selection	1	0	1	1	1	1
48	internal oscillator divided by 3 output	1	1	0	0	0	0
49	matrix input <47> divided by 3	1	1	0	0	0	1
50	pin12 digital input	1	1	0	0	1	0
51	pin13 digital input	1	1	0	0	1	1
52	pin14 digital input	1	1	0	1	0	0
53	pin15 digital input	1	1	0	1	0	1
54	pin16 digital input	1	1	0	1	1	0
55	pin17 digital input	1	1	0	1	1	1
56	pin18 digital input	1	1	1	0	0	0
57	pin19 digital input	1	1	1	0	0	1
58	pin20 digital input	1	1	1	0	1	0
59	out of INV_0 gate	1	1	1	0	1	1
60	out of INV_1 gate	1	1	1	1	0	0
61	filter_1 output	1	1	1	1	0	1
62	Resetb_core as matrix input	1	1	1	1	1	0
63	V_{DD}	1	1	1	1	1	1

© 2023 Renesas Electronics Corporation

Downloaded from Arrow.com.

8.2 Matrix Output Table

Table 25. Matrix Output Table

Register Bit Address	Matrix Output Signal Function	Matrix Output Number
reg<5:0>	Matrix Out: PIN3 Digital Output Source	0
reg<11:6>	Matrix Out: Output Enable of PIN3	1
reg<17:12>	Matrix Out: PIN4 Digital Output Source	2
reg<23:18>	Matrix Out: PIN5 Digital Output Source	3
reg<29:24>	Matrix Out: Output Enable of PIN5	4
reg<35:30>	Matrix Out: PIN6 Digital Output Source	5
reg<41:36>	Matrix Out: PIN7 Digital Output Source	6
reg<47:42>	Matrix Out: Output Enable of PIN7	7
reg<53:48>	Matrix Out: PIN8 Digital Output Source	8
reg<59:54>	Matrix Out: PIN9 Digital Output Source	9
reg<65:60>	Matrix Out: Output Enable of PIN9	10
reg<71:66>	Matrix Out: PIN10 Digital Output Source (Super Drive)	11
reg<77:72>	Matrix Out: pdb (power down) for ACMP0	12
reg<83:78>	Matrix Out: pdb (power down) for ACMP1	13
reg<89:84>	Matrix Out: pdb (power down) for ACMP2	14
reg<95:90>	Matrix Out: Input for delay0 or Counter0 external clock	15
reg<101:96>	Matrix Out: Input for delay1 or counter1 reset input	16
reg<107:102>	Matrix Out: Input for Counter1 external clock or delay1 external clock	17
reg<113:108>	Matrix Out: Input for delay4 or Counter4 external clock	18
reg<119:114>	Matrix Out: Input for delay5 or Counter5 external clock	19
reg<125:120>	Matrix Out: Input for delay6 or Counter6 external clock	20
reg<131:126>	Matrix Out: Input for filter_0	21
reg<137:132>	Matrix Out: Input for filter_1	22
reg<143:138>	Matrix Out: pdb (power down) for ACMP3	23
reg<149:144>	Matrix Out: In0 of LUT3_9	24
reg<155:150>	Matrix Out: In1 of LUT3_9	25
reg<161:156>	Matrix Out: In2 of LUT3_9	26
reg<167:162>	Matrix Out: In0 of LUT4_0 or Input for Counter2 (delay2) external clock	27
reg<173:168>	Matrix Out: In1 of LUT4_0 or Input for delay2 (counter2 reset input)	28
reg<179:174>	Matrix Out: In2 of LUT4_0	29
reg<185:180>	Matrix Out: In3 of LUT4_0	30
reg<191:186>	Matrix Out: In0 of LUT4_1 or Input for Counter3(delay3) external clock	31
reg<197:192>	Matrix Out: In1 of LUT4_1 or Input for delay3(counter3 reset input)	32
reg<203:198>	Matrix Out: In2 of LUT4_1	33
reg<209:204>	Matrix Out: In3 of LUT4_1	34
reg<215:210>	Matrix Out: In0 of LUT3_0	35
reg<221:216>	Matrix Out: In1 of LUT3_0	36
reg<227:222>	Matrix Out: In2 of LUT3_0	37

© 2023 Renesas Electronics Corporation

Downloaded from Arrow.com.

Table 25. Matrix Output Table

Register Bit Address	Matrix Output Signal Function	Matrix Output Number
reg<233:228>	Matrix Out: In0 of LUT3_1	38
reg<239:234>	Matrix Out: In1 of LUT3_1	39
reg<245:240>	Matrix Out: In2 of LUT3_1	40
reg<251:246>	Matrix Out: In0 of LUT3_2 or Clock Input of DFF2	41
reg<257:252>	Matrix Out: In1 of LUT3_2 or Data Input of DFF2	42
reg<263:258>	Matrix Out: In2 of LUT3_2 or Resetb Input of DFF2	43
reg<269:264>	Matrix Out: In0 of LUT3_3 or Clock Input of DFF3	44
reg<275:270>	Matrix Out: In1 of LUT3_3 or Data Input of DFF3	45
reg<281:276>	Matrix Out: In2 of LUT3_3 or Resetb (Setb) of DFF3	46
reg<287:282>	Matrix Out: In0 of LUT3_4	47
reg<293:288>	Matrix Out: In1 of LUT3_4	48
reg<299:294>	Matrix Out: In2 of LUT3_4	49
reg<305:300>	Matrix Out: In0 of LUT3_5	50
reg<311:306>	Matrix Out: In1 of LUT3_5	51
reg<317:312>	Matrix Out: In2 of LUT3_5	52
reg<323:318>	Matrix Out: In0 of LUT3_6	53
reg<329:324>	Matrix Out: In1 of LUT3_6	54
reg<335:330>	Matrix Out: In2 of LUT3_6	55
reg<341:336>	Matrix Out: In0 of LUT3_7	56
reg<347:342>	Matrix Out: In1 of LUT3_7	57
reg<353:348>	Matrix Out: In2 of LUT3_7	58
reg<359:354>	Matrix Out: In0 of LUT3_8 or Input of Pipe delay	59
reg<365:360>	Matrix Out: In1 of LUT3_8 or Resetb of Pipe delay	60
reg<371:366>	Matrix Out: In2 of LUT3_8 or Clock of Pipe delay	61
reg<377:372>	Matrix Out: In0 of LUT2_0 or Clock Input of DFF4	62
reg<383:378>	Matrix Out: In1 of LUT2_0 or Data Input of DFF4	63
reg<389:384>	Matrix Out: In0 of LUT2_1 or Clock Input of DFF5	64
reg<395:390>	Matrix Out: In1 of LUT2_1 or Data Input of DFF5	65
reg<401:396>	Matrix Out: In0 of LUT2_2 or Clock Input of DFF6	66
reg<407:402>	Matrix Out: In1 of LUT2_2 or Data Input of DFF6	67
reg<413:408>	Matrix Out: In0 of LUT2_3 or Clock Input of DFF7	68
reg<419:414>	Matrix Out: In1 of LUT2_3 or Data Input of DFF7	69
reg<425:420>	Matrix Out: In0 of LUT2_4	70
reg<431:426>	Matrix Out: In1 of LUT2_4	71
reg<437:432>	Matrix Out: In0 of LUT2_5	72
reg<443:438>	Matrix Out: In1 of LUT2_5	73
reg<449:444>	Matrix Out: Input for programmable delay & edge detector	74
reg<455:450>	Matrix Out: Power down for osc	75
reg<461:456>	Matrix Out: Pin12 Digital Output Source (Super Drive)	76

© 2023 Renesas Electronics Corporation

Downloaded from Arrow.com.

Table 25. Matrix Output Table

Register Bit Address	Matrix Output Signal Function	Matrix Output Number
reg<467:462>	Matrix Out: Pin13 Digital Output Source	77
reg<473:468>	Matrix Out: Pin13 Output Enable	78
reg<479:474>	Matrix Out: Pin14 Digital Output Source	79
reg<485:480>	Matrix Out: Pin14 Output Enable	80
reg<491:486>	Matrix Out: Pin15 Digital Output Source	81
reg<497:492>	Matrix Out: Pin16 Digital Output Source	82
reg<503:498>	Matrix Out: Pin16 Output Enable	83
reg<509:504>	Matrix Out: Pin17 Digital Output Source	84
reg<515:510>	Matrix Out: Pin18 Digital Output Source	85
reg<521:516>	Matrix Out: Pin18 Output Enable	86
reg<527:522>	Matrix Out: Pin19 Digital Output Source	87
reg<533:528>	Matrix Out: Pin19 Output Enable	88
reg<539:534>	Matrix Out: Pin20 Digital Output Source	89
reg<545:540>	Matrix Out: Input of INV_0 gate	90
reg<551:546>	Matrix Out: Input of INV_1 gate	91

© 2023 Renesas Electronics Corporation

Downloaded from Arrow.com.

9.0 Combinatorial Logic

Combinatorial logic is supported via nine Lookup Tables (LUTs) within the SLG46721. There are two 2-bit LUTs and seven 3-bit LUTs. The device also includes eight Combination Function Macrocells that can be used as LUTs. For more details, please see Section 10.0 Combination Function Macrocells.

Inputs/Outputs for the nine LUTs are configured from the connection matrix with specific logic functions being defined by the state of NVM bits. The outputs of the LUTs can be configured to any user defined function, including the following standard digital logic devices (AND, NAND, OR, NOR, XOR, XNOR).

9.1 2-Bit LUT

The two 2-bit LUTs each take in two input signals from the connection matrix and produce a single output, which goes back into the connection matrix. .

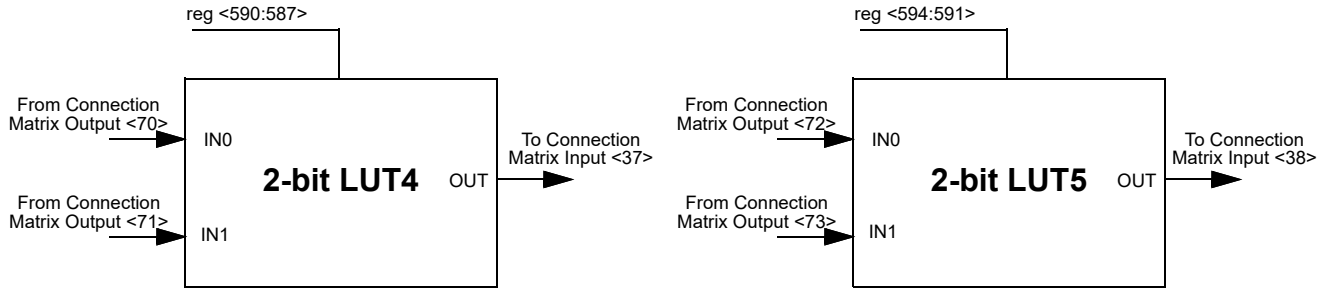

Figure 7. 2-bit LUTs

Table 26. 2-bit LUT4 Truth Table.

IN1	IN0	OUT
0	0	reg <587>
0	1	reg <588>
1	0	reg <589>
1	1	reg <590>

Table 27. 2-bit LUT5 Truth Table.

IN1	IN0	OUT
0	0	reg <591>
0	1	reg <592>
1	0	reg <593>
1	1	reg <594>

Each 2-bit LUT uses a 4-bit register signal to define their output functions;

2-Bit LUT4 is defined by reg<590:587>

2-Bit LUT5 is defined by reg<594:591>

The table below shows the register bits for the standard digital logic devices (AND, NAND, OR, NOR, XOR, XNOR) that can be created within each of the two 2-bit LUT logic cells.

Table 28. 2-bit LUT Standard Digital Functions.

Function	MSB			LSB
AND-2	1	0	0	0
NAND-2	0	1	1	1
OR-2	1	1	1	0
NOR-2	0	0	0	1
XOR-2	0	1	1	0
XNOR-2	1	0	0	1

© 2023 Renesas Electronics Corporation

Downloaded from Arrow.com.

9.2 3-Bit LUT

The seven 3-bit LUTs each take in three input signals from the connection matrix and produce a single output, which goes back into the connection matrix.

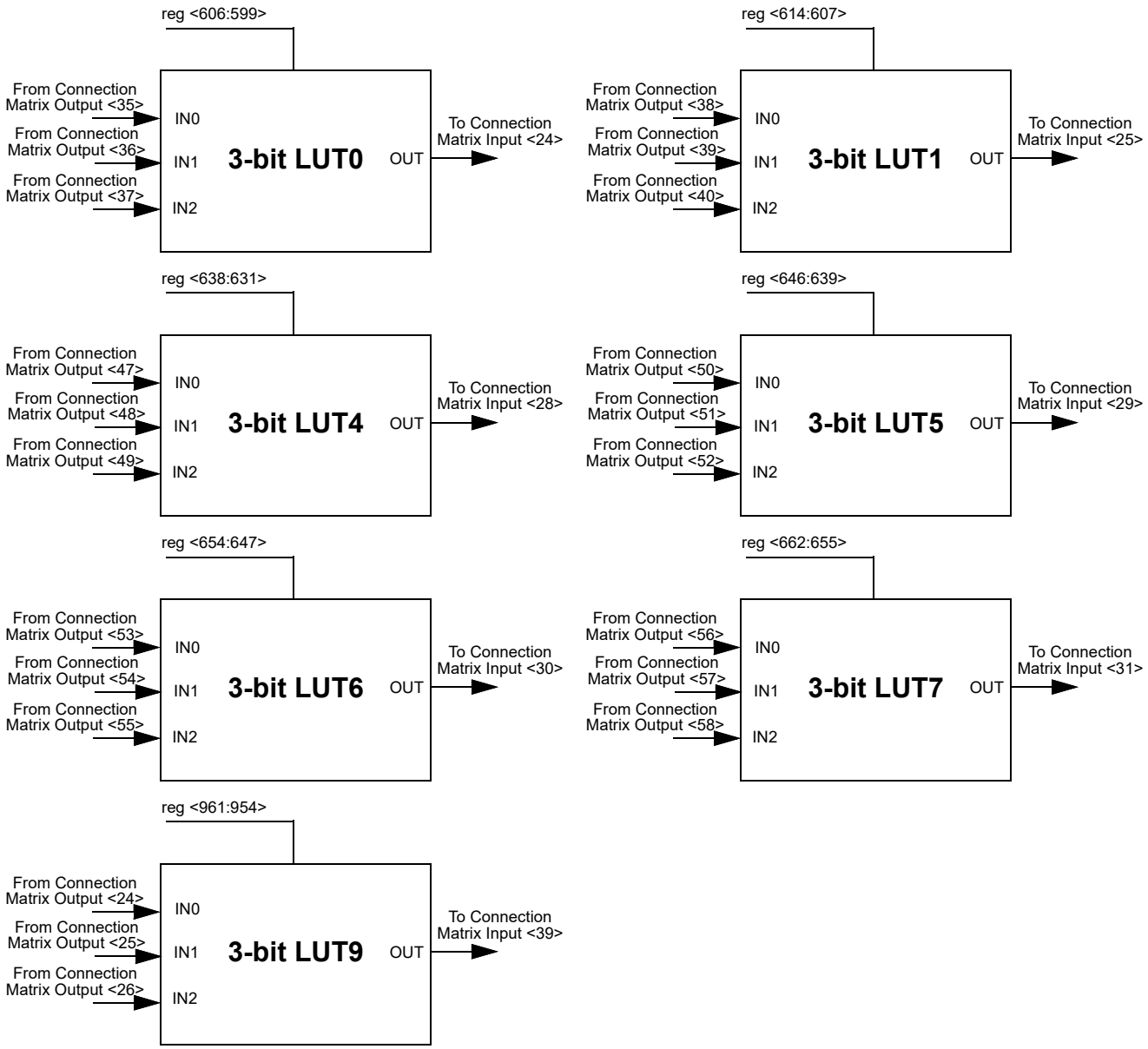

Figure 8. 3-bit LUTs

Downloaded from Arrow.com.

Table 29. 3-bit LUT0 Truth Table.

IN2	IN1	IN0	OUT
0	0	0	reg <599>
0	0	1	reg <600>
0	1	0	reg <601>
0	1	1	reg <602>
1	0	0	reg <603>
1	0	1	reg <604>
1	1	0	reg <605>
1	1	1	reg <606>

Table 30. 3-bit LUT1 Truth Table.

IN2	IN1	IN0	OUT
0	0	0	reg <607>
0	0	1	reg <608>
0	1	0	reg <609>
0	1	1	reg <610>
1	0	0	reg <611>
1	0	1	reg <612>
1	1	0	reg <613>
1	1	1	reg <614>

Table 31. 3-bit LUT4 Truth Table.

IN2	IN1	IN0	OUT
0	0	0	reg <631>
0	0	1	reg <632>
0	1	0	reg <633>
0	1	1	reg <634>
1	0	0	reg <635>
1	0	1	reg <636>
1	1	0	reg <637>
1	1	1	reg <638>

Table 32. 3-bit LUT5 Truth Table.

IN2	IN1	IN0	OUT
0	0	0	reg <639>
0	0	1	reg <640>
0	1	0	reg <641>
0	1	1	reg <642>
1	0	0	reg <643>
1	0	1	reg <644>
1	1	0	reg <645>
1	1	1	reg <646>

Table 33. 3-bit LUT6 Truth Table.

IN2	IN1	IN0	OUT
0	0	0	reg <647>
0	0	1	reg <648>
0	1	0	reg <649>
0	1	1	reg <650>
1	0	0	reg <651>
1	0	1	reg <652>
1	1	0	reg <653>
1	1	1	reg <654>

Table 34. 3-bit LUT7 Truth Table.

IN2	IN1	IN0	OUT
0	0	0	reg <655>
0	0	1	reg <656>
0	1	0	reg <657>
0	1	1	reg <658>
1	0	0	reg <659>
1	0	1	reg <660>
1	1	0	reg <661>
1	1	1	reg <662>

Table 35. 3-bit LUT9 Truth Table.

IN2	IN1	IN0	OUT
0	0	0	reg <954>
0	0	1	reg <955>
0	1	0	reg <956>
0	1	1	reg <957>
1	0	0	reg <958>
1	0	1	reg <959>
1	1	0	reg <960>
1	1	1	reg <961>

© 2023 Renesas Electronics Corporation

Downloaded from Arrow.com.

Each 3-bit LUT uses a 8-bit register signal to define their output functions;

3-Bit LUT0 is defined by reg<606:599>

3-Bit LUT1 is defined by reg<614:607>

3-Bit LUT4 is defined by reg<638:631>

3-Bit LUT5 is defined by reg<646:639>

3-Bit LUT6 is defined by reg<654:647>

3-Bit LUT7 is defined by reg<662:655>

3-Bit LUT9 is defined by reg<961:954>

The table below shows the register bits for the standard digital logic devices (AND, NAND, OR, NOR, XOR, XNOR) that can be created within each of the six 3-bit LUT logic cells.

Table 36. 3-bit LUT Standard Digital Functions.

Function	MSB							LSB
AND-3	1	0	0	0	0	0	0	0
NAND-3	0	1	1	1	1	1	1	1
OR-3	1	1	1	1	1	1	1	0
NOR-3	0	0	0	0	0	0	0	1
XOR-3	1	0	0	1	0	1	1	0
XNOR-3	0	1	1	0	1	0	0	1

© 2023 Renesas Electronics Corporation

Downloaded from Arrow.com.

10.0 Combination Function Macrocells

The SLG46721 has nine combination function macrocells that can serve more than one logic or timing function. In each case, they can serve as a Look Up Table (LUT), or as another logic or timing function. See the list below for the functions that can be implemented in these macrocells;

- Four macrocells that can serve as either 2-bit LUTs or as D Flip Flops.
- Two macrocells that can serve as either 3-bit LUTs or as D Flip Flops.
- One macrocell that can serve as either 3-bit LUT or as Pipe Delay
- Two macrocells that can serve as either 4-bit LUTs or as 8-Bit Counter / Delays

Inputs/Outputs for the nine combination function macrocells are configured from the connection matrix with specific logic functions being defined by the state of NVM bits.

When used as a LUT to implement combinatorial logic functions, the outputs of the LUTs can be configured to any user defined function, including the following standard digital logic devices (AND, NAND, OR, NOR, XOR, XNOR).

When used as a D Flip Flop / Latch, the source and destination of the inputs and outputs for the DFF/Latches are configured from the connection matrix. All DFF/Latch macrocells have user selection for initial state, and all have the option to connect both the Q and Q Bar outputs to the connection matrix. The macrocells DFF2, DFF3 have an additional input from the matrix that can serve as a nSet or nReset function to the macrocell.

The operation of the D Flip-Flop and Latch will follow the functional descriptions below:

DFF: CLK is rising edge triggered, then Q = D; otherwise Q will not change

Latch: if CLK = 0, then Q = D

10.1 2-Bit LUT or D Flip Flop Macrocells

There are four macrocells that can serve as either 2-bit LUTs or as D Flip Flops. When used to implement LUT functions, the 2-bit LUTs each take in two input signals from the connection matrix and produce a single output, which goes back into the connection matrix. When used to implement D Flip Flop function, the two input signals from the connection matrix go to the data (d) and clock (clk) inputs for the Flip Flop, with the output going back to the connection matrix.

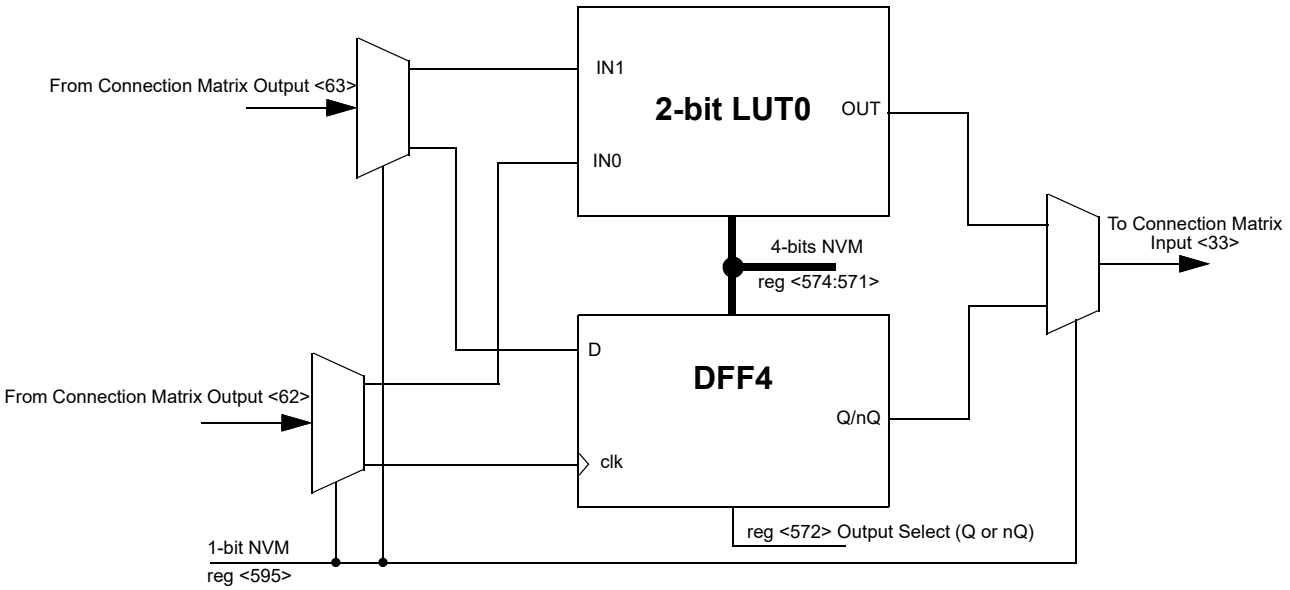

Figure 9. 2-bit LUT0 or DFF4

Downloaded from Arrow.com.

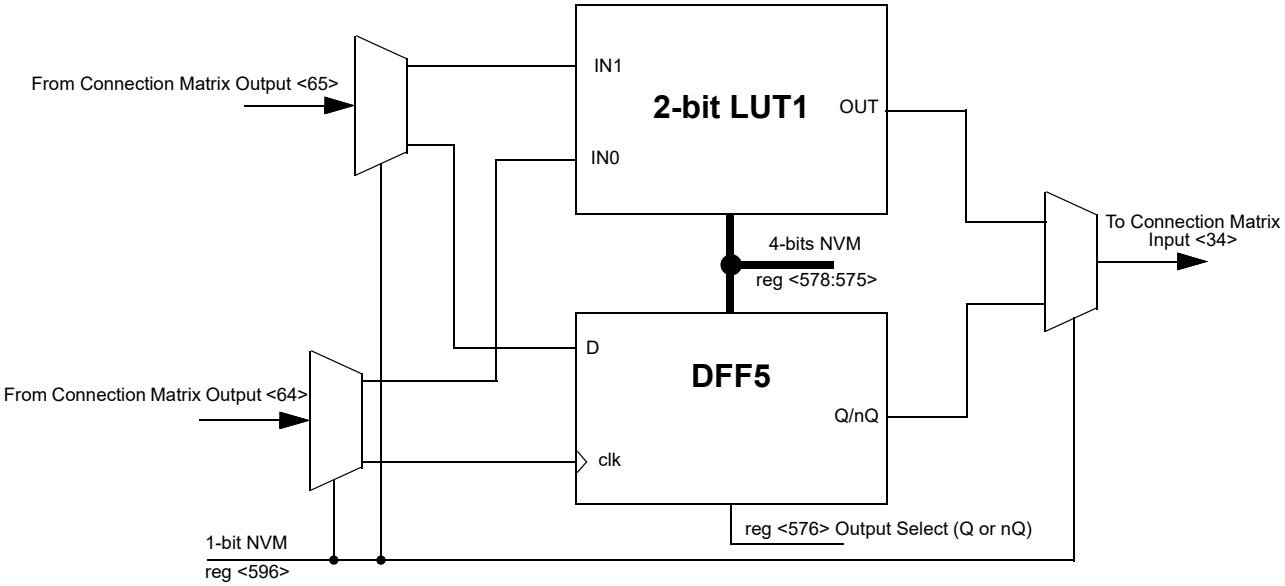

Figure 10. 2-bit LUT1 or DFF5

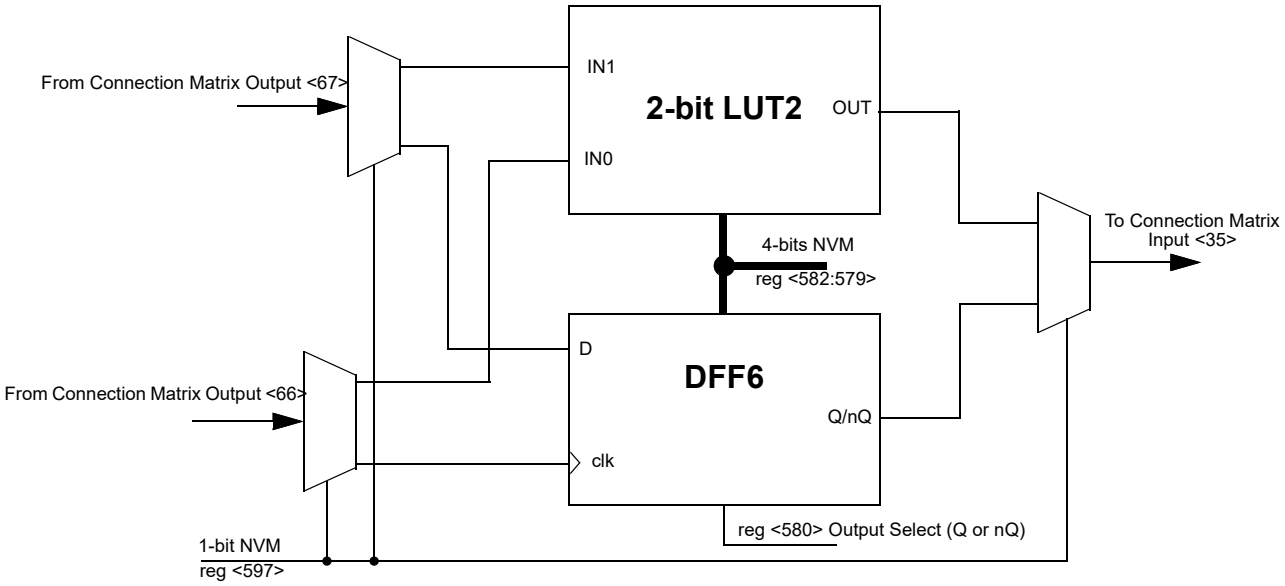

Figure 11. 2-bit LUT2 or DFF6

Downloaded from Arrow.com.

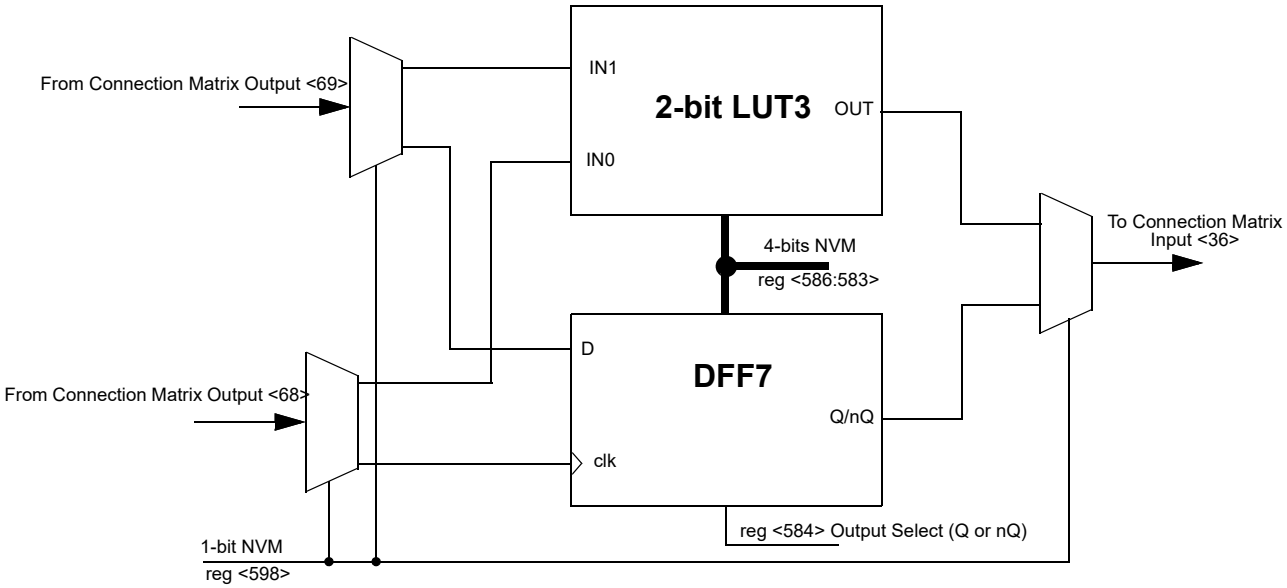

Figure 12. 2-bit LUT3 or DFF7

10.1.1 2-Bit LUT or D Flip Flop Macrocells Used as 2-Bit LUTs

Table 37. 2-bit LUT0 Truth Table.

IN1	IN0	OUT
0	0	reg <571>
0	1	reg <572>
1	0	reg <573>
1	1	reg <574>

Table 38. 2-bit LUT1 Truth Table.

IN1	IN0	OUT
0	0	reg <575>
0	1	reg <576>
1	0	reg <577>
1	1	reg <578>

Table 39. 2-bit LUT2 Truth Table.

IN1	IN0	OUT
0	0	reg <579>
0	1	reg <580>
1	0	reg <581>
1	1	reg <582>

Table 40. 2-bit LUT3 Truth Table.

IN1	IN0	OUT
0	0	reg <583>
0	1	reg <584>
1	0	reg <585>
1	1	reg <586>

Each Macrocell, when programmed for a LUT function, uses a 4-bit register to define their output function:

2-Bit LUT0 is defined by reg<574:571>

2-Bit LUT1 is defined by reg<578:575>

2-Bit LUT2 is defined by reg<582:579>

2-Bit LUT3 is defined by reg<586:583>

Downloaded from Arrow.com.

10.1.2 2-Bit LUT or D Flip Flop Macrocells Used as D Flip Flop Register Settings

Table 41. DFF4 Register Settings

Signal Function	Register Bit Address	Register Definition
LUT2_0 or DFF4 Select	595	0: LUT2_0 1: DFF4
DFF4 or Latch Select	571	0: DFF function 1: Latch function
DFF4 Output Select	572	0: Q output 1: nQ output
DFF4 Initial Polarity Select	573	0: Low 1: High

Table 42. DFF5 Register Settings

Signal Function	Register Bit Address	Register Definition
LUT2_1 or DFF5 Select	596	0: LUT2_1 1: DFF5
Select or Latch select	575	0: DFF function 1: Latch function
DFF5 Output Select	576	0: Q output 1: nQ output
DFF5 Initial Polarity Select	577	0: Low 1: High

Table 43. DFF6 Register Settings

Signal Function	Register Bit Address	Register Definition
LUT2_2 or DFF6 Select	597	0: LUT2_2 1: DFF6
DFF6 or Latch Select	579	0: DFF function 1: Latch function
DFF6 Output Select	580	0: Q output 1: nQ output
DFF6 Initial Polarity Select	581	0: Low 1: High

Table 44. DFF7 Register Settings

Signal Function	Register Bit Address	Register Definition
LUT2_3 or DFF7 Select	598	0: LUT2_3 1: DFF7
DFF7 or Latch Select	583	0: DFF function 1: Latch function
DFF7 Output Select	584	0: Q output 1: nQ output
DFF7 Initial Polarity Select	585	0: Low 1: High

© 2023 Renesas Electronics Corporation

Downloaded from Arrow.com.

10.2 3-Bit LUT or D Flip Flop with Set/Reset Macrocells

There are two macrocells that can serve as either 3-bit LUTs or as D Flip Flops. When used to implement LUT functions, the 3-bit LUTs each take in three input signals from the connection matrix and produce a single output, which goes back into the connection matrix. When used to implement D Flip Flop function, the three input signals from the connection matrix go to the data (d) and clock (clk) and Set/Reset (rRST/nSET) inputs for the Flip Flop, with the output going back to the connection matrix.

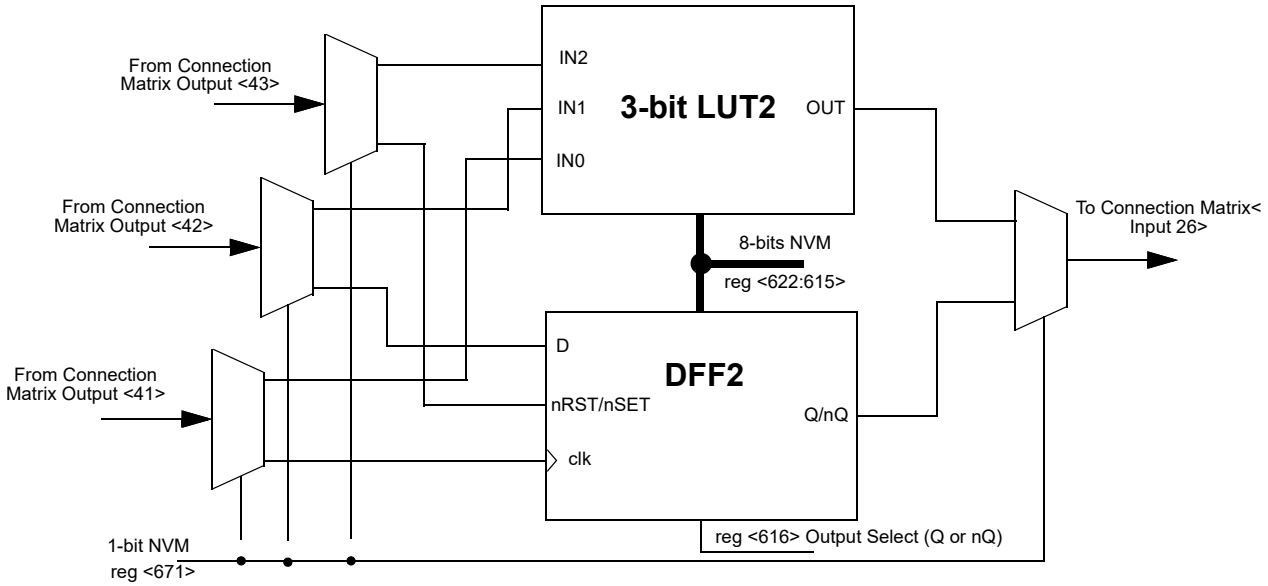

Figure 13. 3-bit LUT2 or DFF2

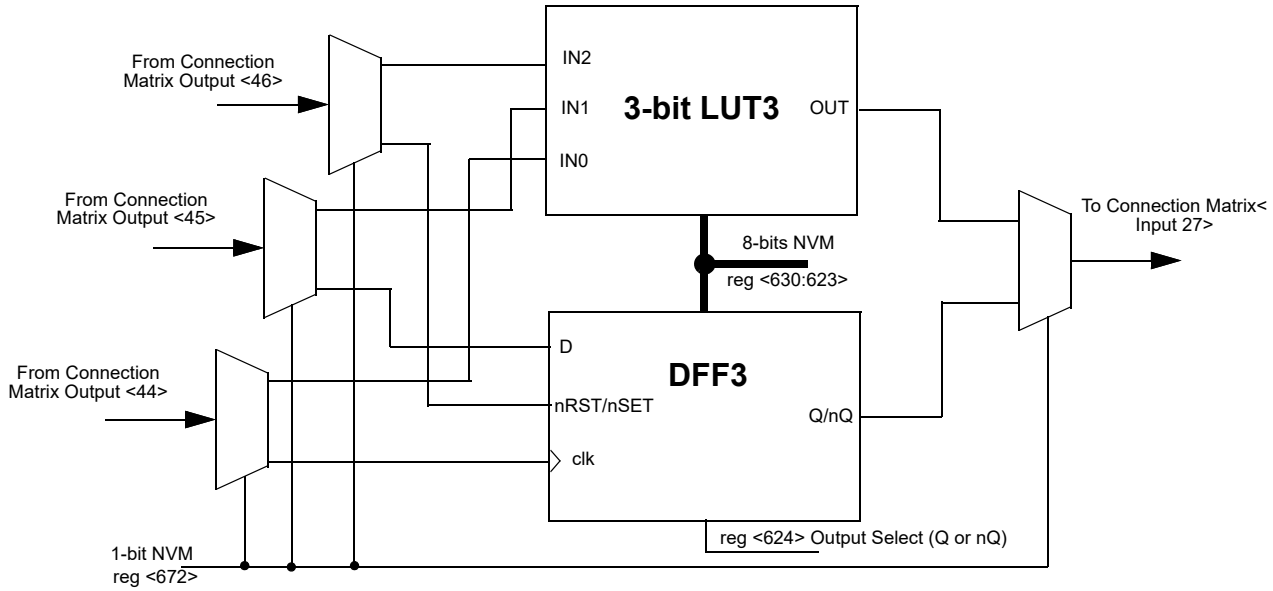

Figure 14. 3-bit LUT3 or DFF3

Downloaded from Arrow.com.

10.2.1 3-Bit LUT or D Flip Flop Macrocells Used as 3-Bit LUTs

Table 45. 3-bit LUT2 Truth Table.

IN2	IN1	IN0	OUT
0	0	0	reg <615>
0	0	1	reg <616>
0	1	0	reg <617>
0	1	1	reg <618>
1	0	0	reg <619>
1	0	1	reg <620>
1	1	0	reg <621>
1	1	1	reg <622>

Table 46. 3-bit LUT3 Truth Table.

IN2	IN1	IN0	OUT
0	0	0	reg <623>
0	0	1	reg <624>
0	1	0	reg <625>
0	1	1	reg <626>
1	0	0	reg <627>
1	0	1	reg <628>
1	1	0	reg <629>
1	1	1	reg <630>

Each Macrocell, when programmed for a LUT function, uses a 8-bit register to define their output function:

3-Bit LUT2 is defined by reg<622:615>

3-Bit LUT3 is defined by reg<630:623>

10.2.2 3-Bit LUT or D Flip Flop Macrocells Used as D Flip Flop Register Settings

Table 47. DFF2 Register Settings

Signal Function	Register Bit Address	Register Definition
LUT3_2 or DFF2 Select	reg<671>	0: LUT3_2 1: DFF2
DFF2 or Latch Select	reg<615>	0: DFF function 1: Latch function
DFF2 Output Select	reg<616>	0: Q output 1: nQ output
DFF2 rstb/setb Select	reg<617>	1: setb from matrix out 0: resetb from matrix out
DFF2 Initial Polarity Select	reg<618>	0: Low 1: High

Table 48. DFF3 Register Settings

Signal Function	Register Bit Address	Register Definition
LUT3_3 or DFF3 Select	reg<672>	0: LUT3_3 1: DFF3
DFF3 or Latch Select	reg<623>	0: DFF function 1: Latch function
DFF3 Output Select	reg<624>	0: Q output 1: nQ output
DFF3 rstb/setb Select	reg<625>	1: setb from matrix out 0: resetb from matrix out
DFF3 Initial Polarity Select	reg<626>	0: Low 1: High

© 2023 Renesas Electronics Corporation

Downloaded from Arrow.com.

10.3 3-Bit LUT or Pipe Delay Macrocell

There is one macrocell that can serve as either a 3-bit LUT or as a Pipe Delay.

When used to implement LUT functions, the 3-bit LUT take in three input signals from the connection matrix and produces a single output, which goes back into the connection matrix.

When used as a pipe delay, there are three inputs signals from the matrix, Input (IN), Clock (CLK) and Reset (RST). The pipe delay cell is built from 16 D Flip-Flop logic cells that provide the three delay options, two of which are user selectable. The DFF cells are tied in series where the output (Q) of each delay cell goes to the next DFF cell. The first delay option (OUT2) is fixed at the output of the first flip-flop stage. The other two outputs (OUT0 and OUT1) provide user selectable options for 1 – 16 stages of delay There are delay output points for each set of the OUT0 and OUT1 outputs to a 4-input mux that is controlled by reg <666:663> for OUT0 and reg <670:667> for OUT1. The 4-input mux is used to control the selection of the amount of delay.

The overall time of the delay is based on the clock used in the SLG46721 design. Each DFF cell has a time delay of the inverse of the clock time (either external clock or the RC Oscillator within the SLG46721). The sum of the number of DFF cells used will be the total time delay of the Pipe Delay logic cell.

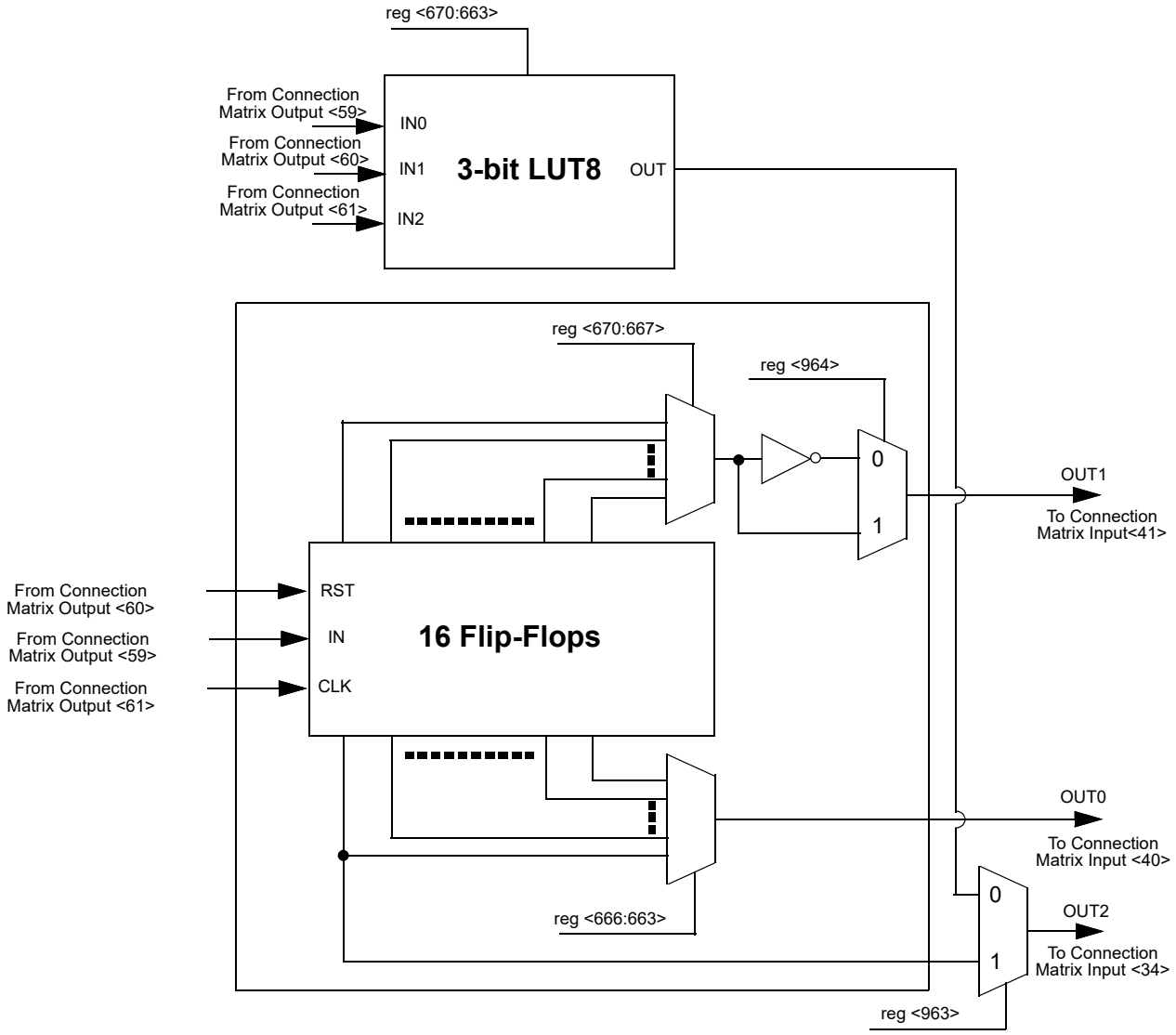

Figure 15. 3-bit LUT8 or Pipe Delay

Downloaded from Arrow.com.

10.3.1 3-Bit LUT or Pipe Delay Macrocells Used as 3-Bit LUTs

Table 49. 3-bit LUT8 Truth Table.

IN2	IN1	IN0	OUT
0	0	0	reg <663>
0	0	1	reg <664>
0	1	0	reg <665>
0	1	1	reg <666>
1	0	0	reg <667>
1	0	1	reg <668>
1	1	0	reg <669>
1	1	1	reg <670>

Each Macrocell, when programmed for a LUT function, uses a 8-bit register to define their output function:

3-Bit LUT8 is defined by reg<670:663>

10.3.2 3-Bit LUT or Pipe Delay Macrocells Used as Pipe Delay Register Settings

Table 50. Pipe Delay Register Settings

Signal Function	Register Bit Address	Register Definition
LUT3_8 or Pipe Delay Output Select	reg<963>	0: LUT3_8 1: 1 Pipe Delay Output
OUT0 select	reg<666:663>	
OUT1 select	reg<670:667>	
Pipe delay OUT1 Polarity Select Bit	reg<964>	0: Non-inverted 1: Inverted

Downloaded from Arrow.com.

10.4 4-Bit LUT or 8- Bit Counter / Delay Macrocells

There are two macrocells that can serve as either 4-bit LUTs or as Counter / Delays. When used to implement LUT functions, the 4-bit LUTs each take in four input signals from the connection matrix and produce a single output, which goes back into the connection matrix. When used to implement 8-Bit Counter / Delays function, two of the four input signals from the connection matrix go to the external clock (ext_clk) and reset (DLY_n/CNT_Reset) for the counter/delay, with the output going back to the connection matrix.

Note: Counters initialize with counter data=0 after POR.

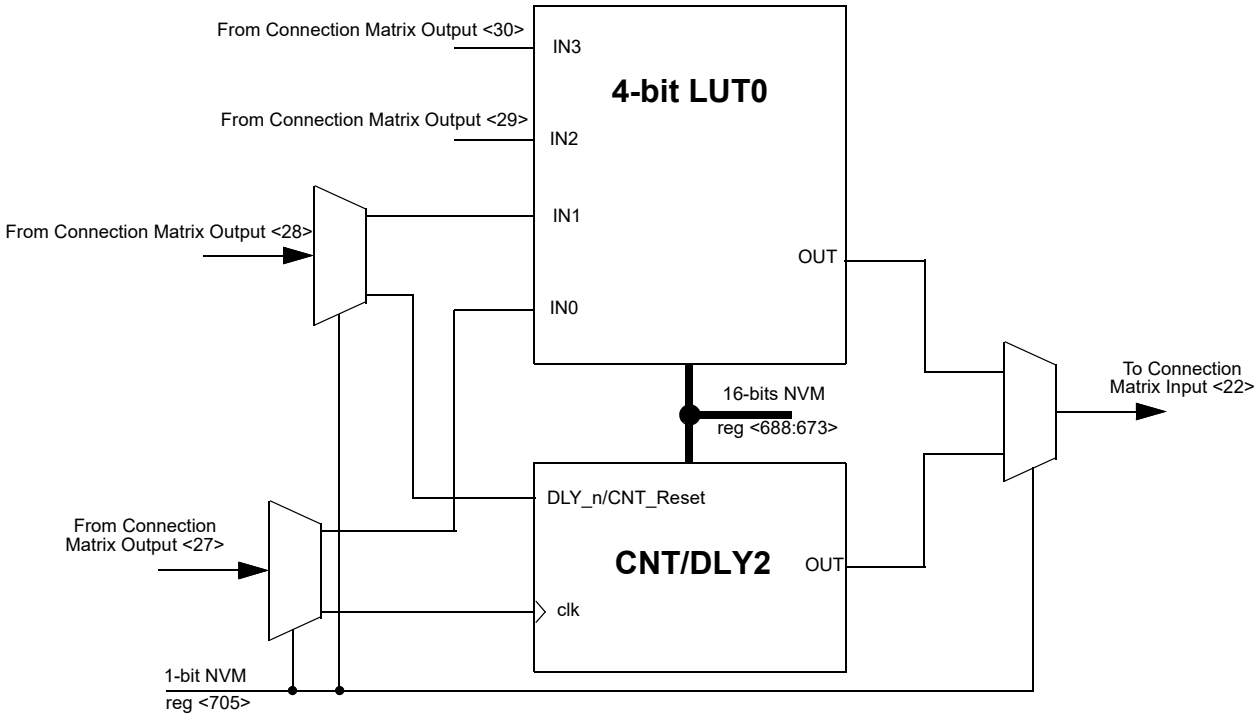

Figure 16. 4-bit LUT0 or CNT/DLY2

Downloaded from Arrow.com.

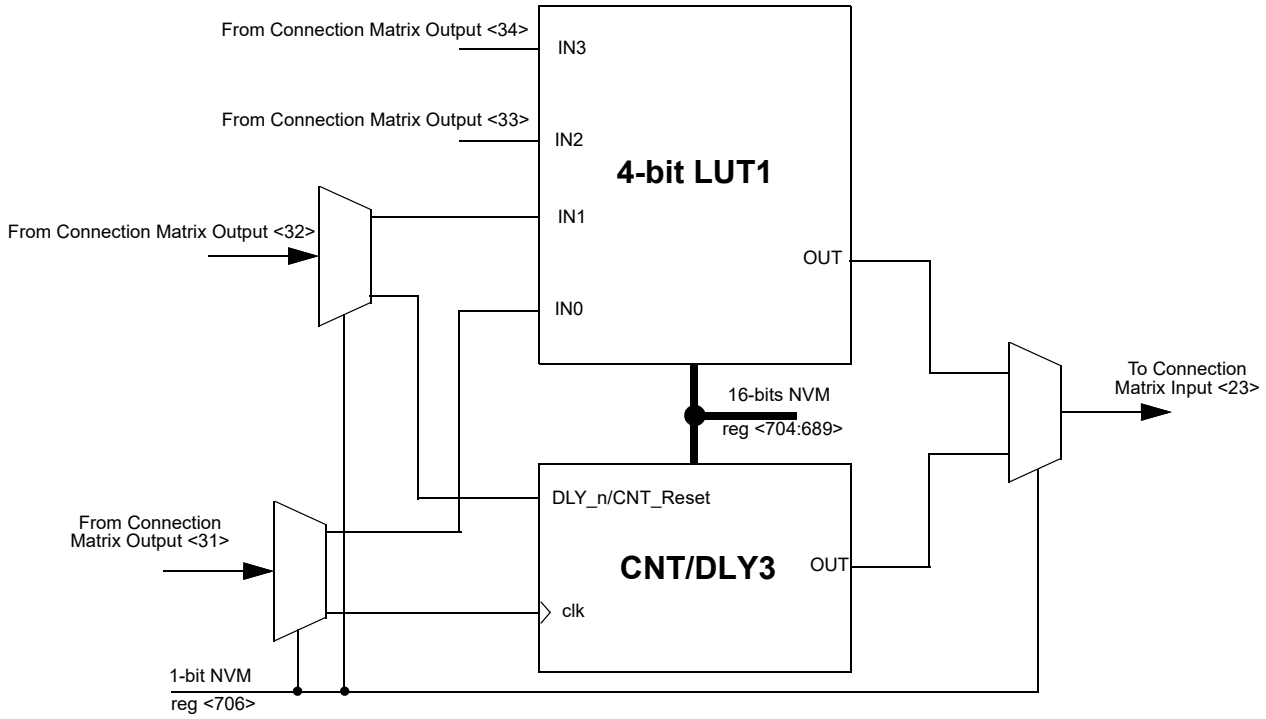

Figure 17. 4-bit LUT1 or CNT/DLY3

Downloaded from Arrow.com.

10.4.1 4-Bit LUT or 8-Bit Counter / Delay Macrocells Used as 4-Bit LUTs

Table 51. 4-bit LUT0 Truth Table.

IN3	IN2	IN1	IN0	OUT
0	0	0	0	reg <673>
0	0	0	1	reg <674>
0	0	1	0	reg <675>
0	0	1	1	reg <676>
0	1	0	0	reg <677>
0	1	0	1	reg <678>
0	1	1	0	reg <679>
0	1	1	1	reg <680>
1	0	0	0	reg <681>
1	0	0	1	reg <682>
1	0	1	0	reg <683>
1	0	1	1	reg <684>
1	1	0	0	reg <685>
1	1	0	1	reg <686>
1	1	1	0	reg <687>
1	1	1	1	reg <688>

Table 52. 4-bit LUT1 Truth Table.

IN3	IN2	IN1	IN0	OUT
0	0	0	0	reg <689>
0	0	0	1	reg <690>
0	0	1	0	reg <691>
0	0	1	1	reg <692>
0	1	0	0	reg <693>
0	1	0	1	reg <694>
0	1	1	0	reg <695>
0	1	1	1	reg <696>
1	0	0	0	reg <697>
1	0	0	1	reg <698>
1	0	1	0	reg <699>
1	0	1	1	reg <700>
1	1	0	0	reg <701>
1	1	0	1	reg <702>
1	1	1	0	reg <703>
1	1	1	1	reg <704>

Each Macrocell, when programmed for a LUT function, uses a 16-bit register to define their output function:

4-Bit LUT0 is defined by reg<688:673>

4-Bit LUT1 is defined by reg<704:689>

Table 53. 4-bit LUT Standard Digital Functions

Function	MSB															LSB
AND-4	1	0	0	0	0	0	0	0	0	0	0	0	0	0	0	0
NAND-4	0	1	1	1	1	1	1	1	1	1	1	1	1	1	1	1
OR-4	1	1	1	1	1	1	1	1	1	1	1	1	1	1	1	0
NOR-4	0	0	0	0	0	0	0	0	0	0	0	0	0	0	0	1
XOR-4	0	1	1	0	1	0	0	1	1	0	0	1	0	1	1	0
XNOR-4	1	0	0	1	0	1	1	0	0	1	1	0	1	0	0	1

Downloaded from Arrow.com.

10.4.2 4-Bit LUT or 8-Bit Counter / Delay Macrocells Used as 8-Bit Counter / Delay Register Settings

Table 54. CNT/DLY2 Register Settings

Signal Function	Register Bit Address	Register Definition
LUT4_0 or Counter2 Select	reg<705>	0: LUT4_0 1: Counter2
Counter/delay2 Mode Selection	reg<673>	0: Delay Mode 1: Counter Mode
Counter/delay2 Clock Source Select	reg<676:674>	000: Internal OSC Clock 001: OSC/4 010: OSC/12 011: OSC/24 100: OSC/64 101: External Clock 110: Reserved 111: Counter1 Overflow
Counter/delay2 Control Data	reg<684:677>	1-255: (delay time = (counter data + 2 + variable)/freq), where 0 < variable < 1
Delay2 Mode Select or asynchronous counter reset	reg<686:685>	00: on both falling and rising edges (for delay & counter reset) 01: on falling edge only (for delay & counter reset) 10: on rising edge only (for delay & counter reset) 11: no delay on either falling or rising edges / high level reset

Table 55. CNT/DLY3 Register Settings

Signal Function	Register Bit Address	Register Definition
LUT4_1 or Counter3 Select	reg<706>	0: LUT4_1 1: Counter3
Counter/delay3 Mode Selection	reg<689>	0: Delay Mode 1: Counter Mode
Counter/delay3 Clock Source Select	reg<692:690>	000: Internal OSC Clock 001: OSC/4 010: OSC/12 011: OSC/24 100: OSC/64 101: External Clock 110: Reserved 111: Counter2 Overflow
Counter/delay3 Control Data	reg<700:693>	1-255: (delay time = (counter data + 2 + variable)/freq), where 0 < variable < 1
Delay3 Mode Select or asynchronous counter reset	reg<702:701>	00: on both falling and rising edges (for delay & counter reset) 01: on falling edge only (for delay & counter reset) 10: on rising edge only (for delay & counter reset) 11: no delay on either falling or rising edges / high level reset

© 2023 Renesas Electronics Corporation

Downloaded from Arrow.com.

11.0 Analog Comparators (ACMP)

There are four Analog Comparator (ACMP) macrocells in the SLG46721. In order for the ACMP cells to be used in a GreenPAK design, the power up signals (ACMP0_pdb, ACMP1_pdb, ACMP2_pdb and ACMP3_pdb) need to be active. By connecting to signals coming from the Connection Matrix, it is possible to have each ACMP be on continuously, off continuously, or switched on periodically based on a digital signal coming from the Connection Matrix. When ACMP is powered down, output is low.

Each of the ACMP cells has a positive input signal that can be provided by a variety of external sources, and can also have a selectable gain stage before connection to the analog comparator. Each of the ACMP cells has a negative input signal that is either created from an internal VREF or provided by way of the external sources.

PWR UP = 1 => ACMP is powered up.
PWR UP = 0 => ACMP is powered down.

During powerup, the ACMP output will remain low, and then become valid 120 µs (max) after POR signal goes high. If Low Bandwidth option enabled, then the ACMP output initializes in the high state.

Vref accuracy is optimized near 1000 mV selection.

Input bias current < 1 nA (typ). The Gain divider is unbuffered and consists of 1 MΩ resistors. IN- voltage range: 0 - 1.2 V. Can use Vref selection $V_{DD}/4$ and $V_{DD}/3$ to maintain this input range.

For high input impedance when using the gain divider (x0.25, x0.33, x0.5), it is possible to use the input buffer. However, this will affect input voltage range, see *Figure 18.* . It also will add the offset in a range of -24.5 mV to 12.6 mV. It is not recommended to use the input buffer when the gain divider is not used. .

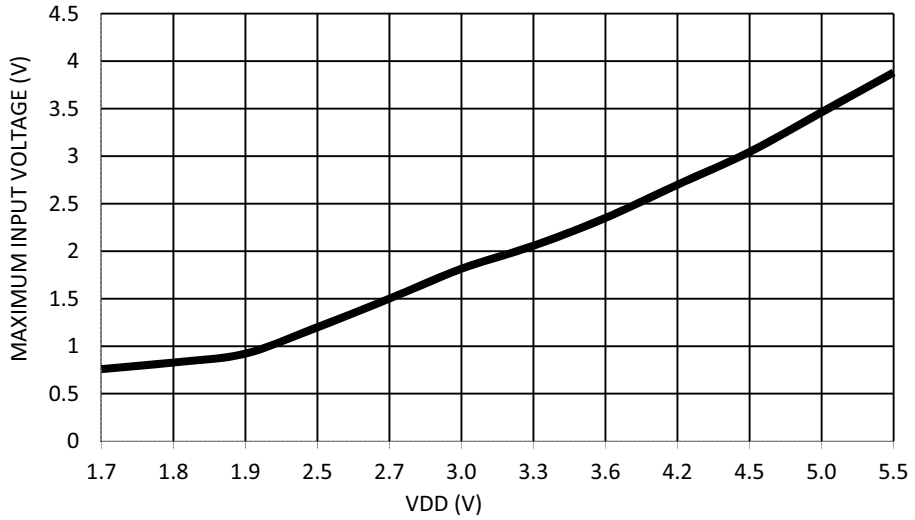

Figure 18. Maximum Analog Buffer Input Voltage vs. V_{DD}

Note: the input buffer gain depends on V_{DD}, see Figure 19. .

Downloaded from Arrow.com.

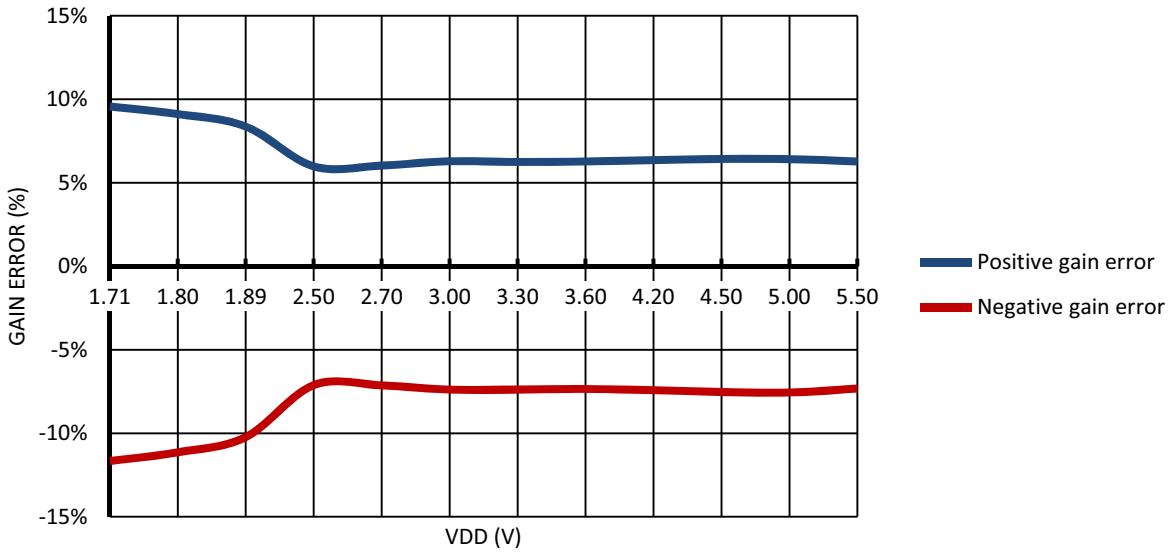

Figure 19. Input Buffer Gain Error vs. V_{DD}

Each of the ACMP cells has a selection for the bandwidth of the input signal, which can be used to save power when low bandwidth signals are input into the analog comparator.

Low bandwidth: For V_{DD} 1.8 V or less, this option will connect a low pass filter with 180 kHz upper frequency. And if input frequency > 200 kHz, the output will retain its previous value.

Enabling the Analog buffer will influence the ACMP response time.

Note that power supply control options have influence on Analog macrocells operation.

Note: Any ACMP powered ON enables the BandGap circuit as well, and an analog voltage will appear on Vref (even when Force BandGap is disabled).

Each cell also has a hysteresis selection, to offer hysteresis of 0 mV, 25 mV, 50 mV or 200 mV.

Hysteresis: Input signal hysteresis options are disable, 25mV, 50mV, 200mV.
ACMP0 IN+ options are pin 6, buffered pin6, V_{DD}
ACMP1 IN+ options are pin 10, buffered pin10, ACMP0 IN+
ACMP2 IN+ options are pin 13, ACMP0 IN+
ACMP3 IN+ options are pin 15, ACMP0 IN+, ACMP2 IN+

Downloaded from Arrow.com.

11.1 ACMP0 Block Diagram

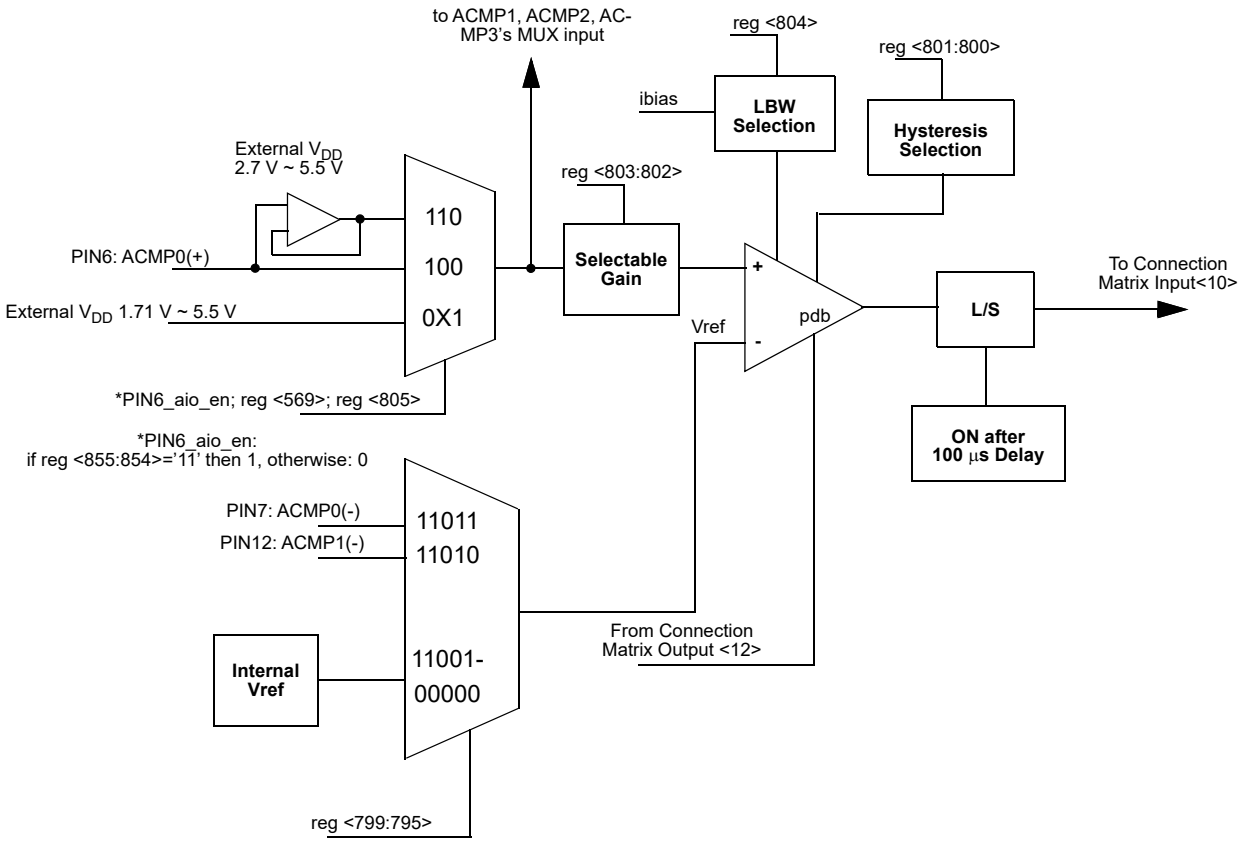

Figure 20. ACMP0 Block Diagram

Downloaded from Arrow.com.

11.2 ACMP0 Register Settings

Table 56. ACMP0 Register Settings

Signal Function	Register Bit Address	Register Definition
Analog Buffer at ACMP0 Enable	reg<569>	1: Enable Analog Buffer 0: Disable Analog Buffer
ACMP0 In Voltage Select	reg<799:795>	00000: 50 mV 00001: 100 mV 00010: 150 mV 00011: 200 mV 00100: 250 mV 00101: 300 mV 00110: 350 mV 00111: 400 mV 01000: 450 mV 01001: 500 mV 01010: 550 mV 01011: 600 mV 01100: 650 mV 01101: 700 mV 01110: 750 mV 01111: 800 mV 10000: 850 mV 10001: 900 mV 10010: 950 mV 10011: 1 V 10100: 1.05 V 10101: 1.1 V 10110: 1.15 V 10111: 1.2 V 11000: $V_{DD}/3$ 11001: $V_{DD}/4$ 11010: EXT_VREF(PIN12) 11011: EXT_VREF(PIN7)
ACMP0 Hysteresis Enable	reg<801:800>	00: Disabled (0 mV) 01: Enabled (25 mV) 10: Enabled (50 mV) 11: Enabled (200 mV)
ACMP0 Positive Input Divider	reg<803:802>	00: 1.00X 01: 0.50X 10: 0.33X 11: 0.25X
ACMP0 Low Bandwidth (Max: 1 MHz) Enable	reg<804>	1: On 0: Off
ACMP0 Positive Input Source Select V_{DD}	reg<805>	0: Disable 1: Enable

Downloaded from Arrow.com.

11.3 ACMP1 Block Diagram

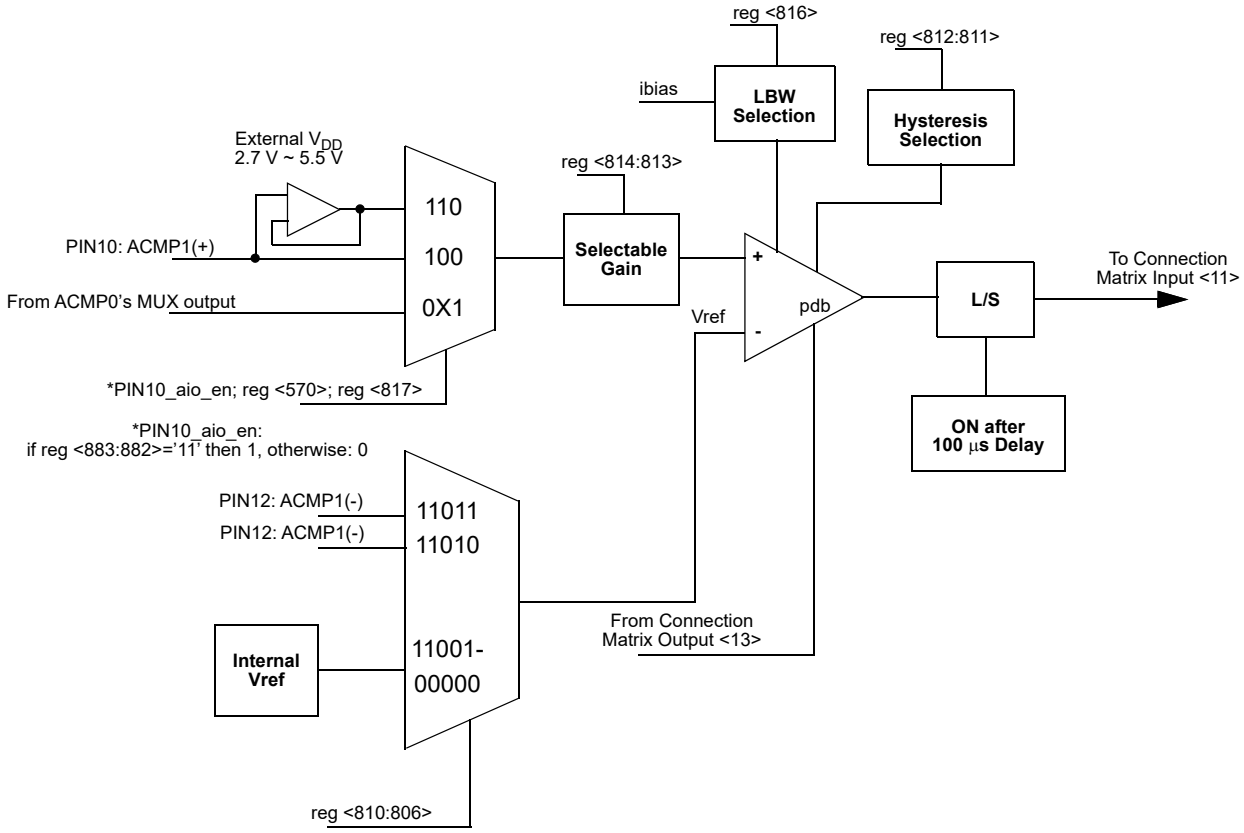

Figure 21. ACMP1 Block Diagram

Downloaded from Arrow.com.

11.4 ACMP1 Register Settings

Table 57. ACMP1 Register Settings

Signal Function	Register Bit Address	Register Definition
Analog Buffer at ACMP1 Enable	reg<570>	1: Enable Analog Buffer 0: Disable Analog Buffer
ACMP1 Negative Input Voltage Select	reg<810:806>	00000: 50 mV 00001: 100 mV 00010: 150 mV 00011: 200 mV 00100: 250 mV 00101: 300 mV 00110: 350 mV 00111: 400 mV 01000: 450 mV 01001: 500 mV 01010: 550 mV 01011: 600 mV 01100: 650 mV 01101: 700 mV 01110: 750 mV 01111: 800 mV 10000: 850 mV 10001: 900 mV 10010: 950 mV 10011: 1 V 10100: 1.05 V 10101: 1.1 V 10110: 1.15 V 10111: 1.2 V 11000: $V_{DD}/3$ 11001: $V_{DD}/4$ 11010: EXT_VREF(PIN12) 11011: EXT_VREF(PIN12)
ACMP1 Hysteresis Enable	reg<812:811>	00: Disabled (0 mV) 01: Enabled (25 mV) 10: Enabled (50 mV) 11: Enabled (200 mV)
ACMP1 Positive Input Divider	reg<814:813>	00: 1.00X 01: 0.50X 10: 0.33X 11: 0.25X
ACMP1 Low Bandwidth (Max: 1 MHz) Enable	reg<816>	0: Off 1: On
ACMP1 Positive Input Source Select PIN6	reg<817>	0: Disable 1: Enable

Downloaded from Arrow.com.

11.5 ACMP2 Block Diagram

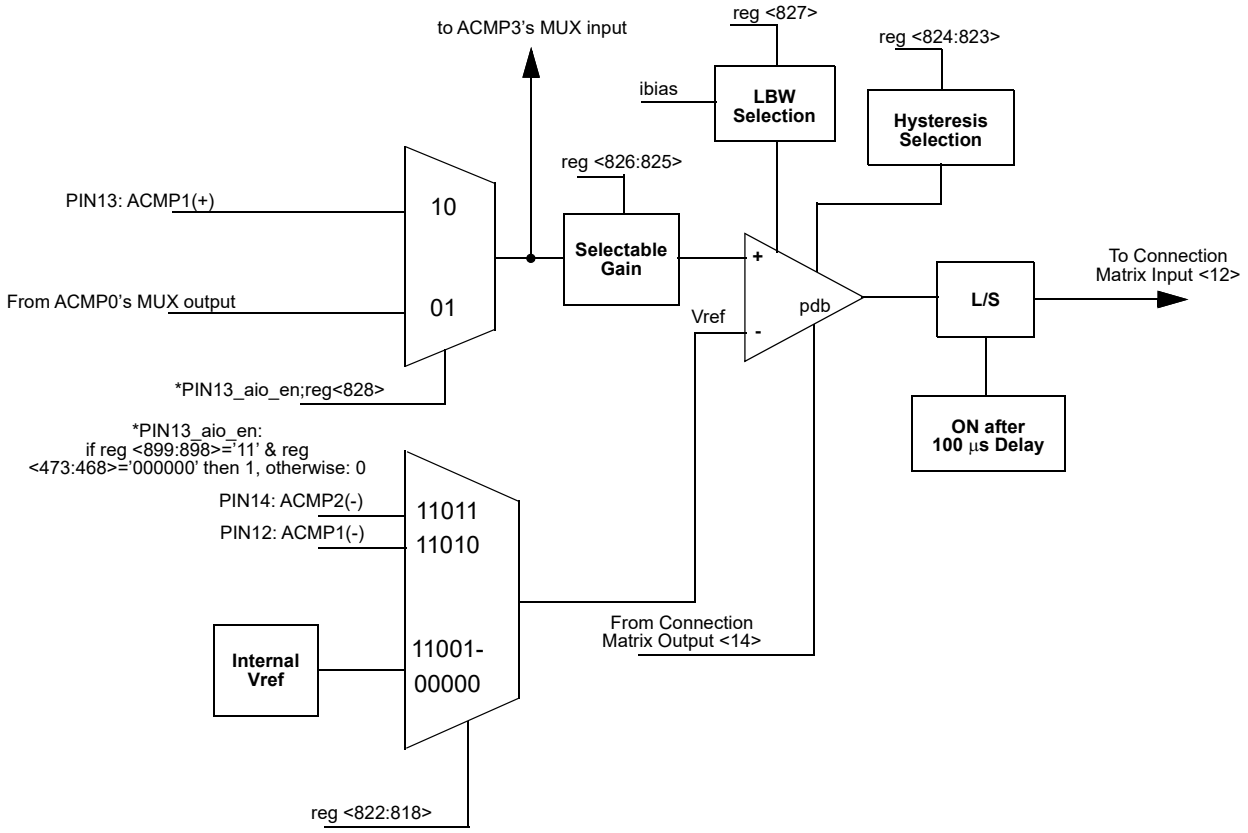

Figure 22. ACMP2 Block Diagram

Downloaded from Arrow.com.

11.6 ACMP2 Register Settings

Table 58. ACMP2 Register Settings

Signal Function	Register Bit Address	Register Definition
ACMP2 Negative Input Voltage Select	reg<822:818>	00000: 50 mV 00001: 100 mV 00010: 150 mV 00011: 200 mV 00100: 250 mV 00101: 300 mV 00110: 350 mV 00111: 400 mV 01000: 450 mV 01001: 500 mV 01010: 550 mV 01011: 600 mV 01100: 650 mV 01101: 700 mV 01110: 750 mV 01111: 800 mV 10000: 850 mV 10001: 900 mV 10010: 950 mV 10011: 1 V 10100: 1.05 V 10101: 1.1 V 10110: 1.15 V 10111: 1.2 V 11000: $V_{DD}/3$ 11001: $V_{DD}/4$ 11010: EXT_VREF(PIN12) 11011: EXT_VREF(PIN14)
ACMP2 Hysteresis Enable	reg<824:823>	00: Disabled (0 mV) 01: Enabled (25 mV) 10: Enabled (50 mV) 11: Enabled (200 mV)
ACMP2 Positive Input Divider	reg<826:825>	00: 1.00X 01: 0.50X 10: 0.33X 11: 0.25X
ACMP2 Low Bandwidth (Max: 1 MHz) Enable	reg<827>	0: Off 1: On
ACMP2 Positive Input Source Select PIN6	reg<828>	0: Disable 1: Enable

Downloaded from Arrow.com.

11.7 ACMP3 Block Diagram

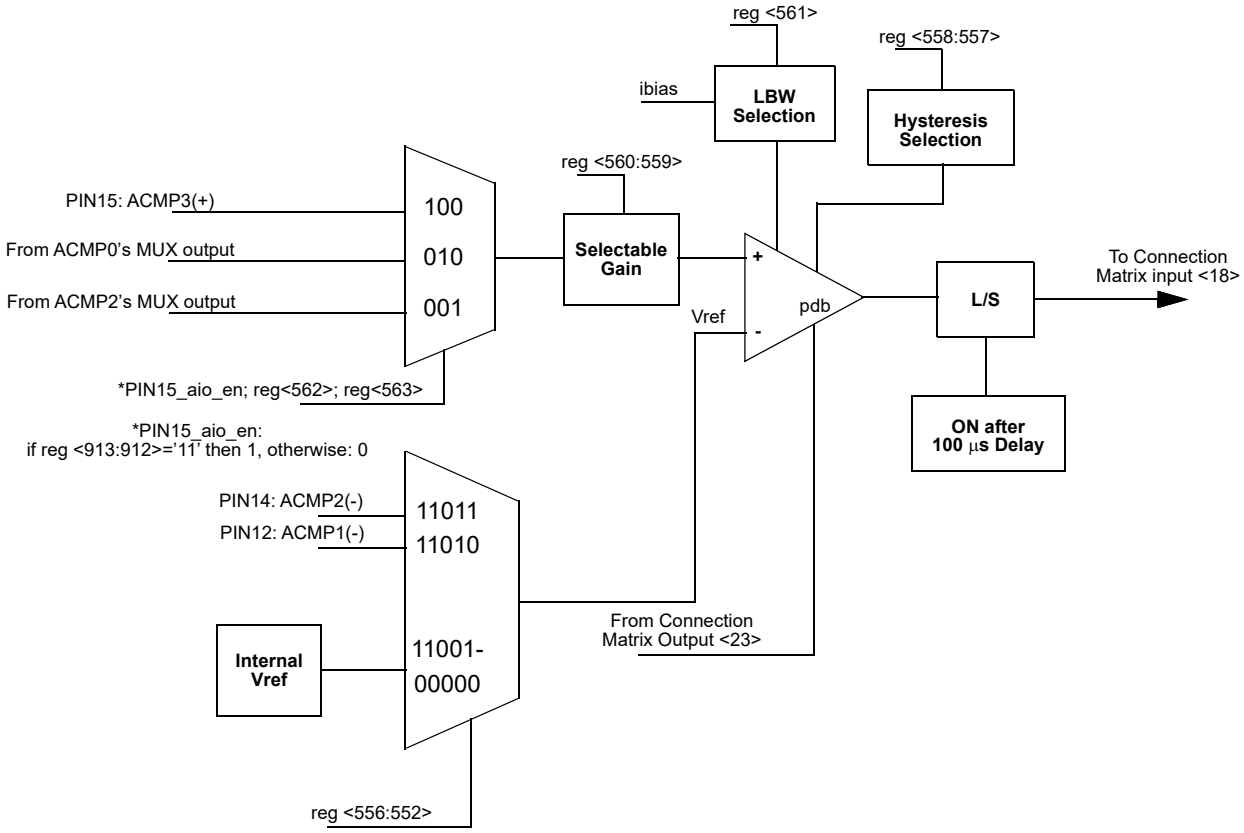

Figure 23. ACMP3 Block Diagram

Downloaded from Arrow.com.

11.8 ACMP3 Register Settings

Table 59. ACMP3 Register Settings

Signal Function	Register Bit Address	Register Definition
ACMP3 Negative Input Voltage Select	reg<556:552>	00000: 50 mV 00001: 100 mV 00010: 150 mV 00011: 200 mV 00100: 250 mV 00101: 300 mV 00110: 350 mV 00111: 400 mV 01000: 450 mV 01001: 500 mV 01010: 550 mV 01011: 600 mV 01100: 650 mV 01101: 700 mV 01110: 750 mV 01111: 800 mV 10000: 850 mV 10001: 900 mV 10010: 950 mV 10011: 1 V 10100: 1.05 V 10101: 1.1 V 10110: 1.15 V 10111: 1.2 V 11000: $V_{DD}/3$ 11001: $V_{DD}/4$ 11010: EXT_VREF(PIN12) 11011: EXT_VREF(PIN14)
ACMP3 Hysteresis Enable	reg<558:557>	00: Disabled (0 mV) 01: Enabled (25 mV) 10: Enabled (50 mV) 11: Enabled (200 mV)
ACMP3 Positive Input Divider	reg<560:559>	00: 1.00X 01: 0.50X 10: 0.33X 11: 0.25X
ACMP3 Low Bandwidth (Max: 1 MHz) Enable	reg<561>	1: On 0: Off
ACMP3 Positive Input Source Select PIN6	reg<562>	0: Disable 1: Enable
ACMP3 Positive Input Source Select PIN13	reg<563>	0: Disable 1: Enable

Downloaded from Arrow.com.

12.0 Digital Storage Elements (DFFs/Latches)

There are six Combination Function macrocells that can be used to implement D-Flip Flop or Latch functions. Please see Section 10.1 2-Bit LUT or D Flip Flop Macrocells and Section 10.2 3-Bit LUT or D Flip Flop with Set/Reset Macrocells for the description of this Combination Function macrocell.

12.1 Initial Polarity Operations

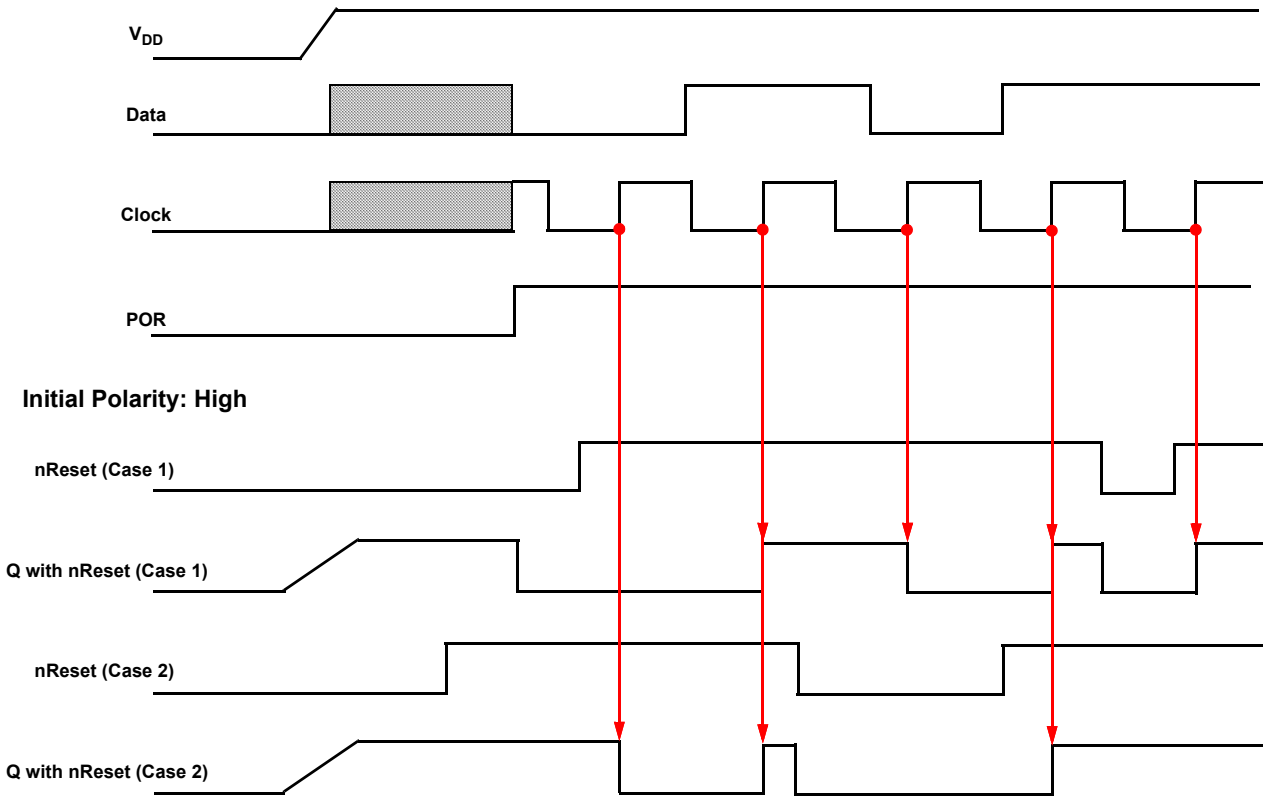

Figure 24. DFF Polarity Operations

Downloaded from Arrow.com.

13.0 Counters/Delay Generators (CNT/DLY)

There are five configurable counters/delay generators in the SLG46721. Two of these counters/delay generators (CNT/DLY 0 and 1) are 14-bit, and three of the counters/delay generators (CNT/DLY 4, 5, 6) are 8-bit. For flexibility, each of these macrocells has a large selection of internal and external clock sources, as well as the option to chain from the output of the previous (N-1) CNT/DLY macrocell, to implement longer count / delay circuits.

One of the counter/delay generator macrocells (CNT/DLY 1) has two inputs from the connection matrix, one for Delay Input/Reset Input (Delay_In/Reset_In), and one for an external counter/clock source. Four of the counter/delay generator macrocells (CNT/DLY 0, 4, 5, 6) have one input from the connection matrix, which has a shared function of either a Delay Input or an external clock input.

CNT/DLY6 has one extra output on which a short pulse will be generated according to the configured edge on the input signal if detected.

Note that there are also two Combination Function Macrocells that can implement either 4-bit LUTs or 8-bit counter / delays, For more information please see Section 10.4 4-Bit LUT or 8- Bit Counter / Delay Macrocells.

Note: Counters initialize with counter data=0 after POR.

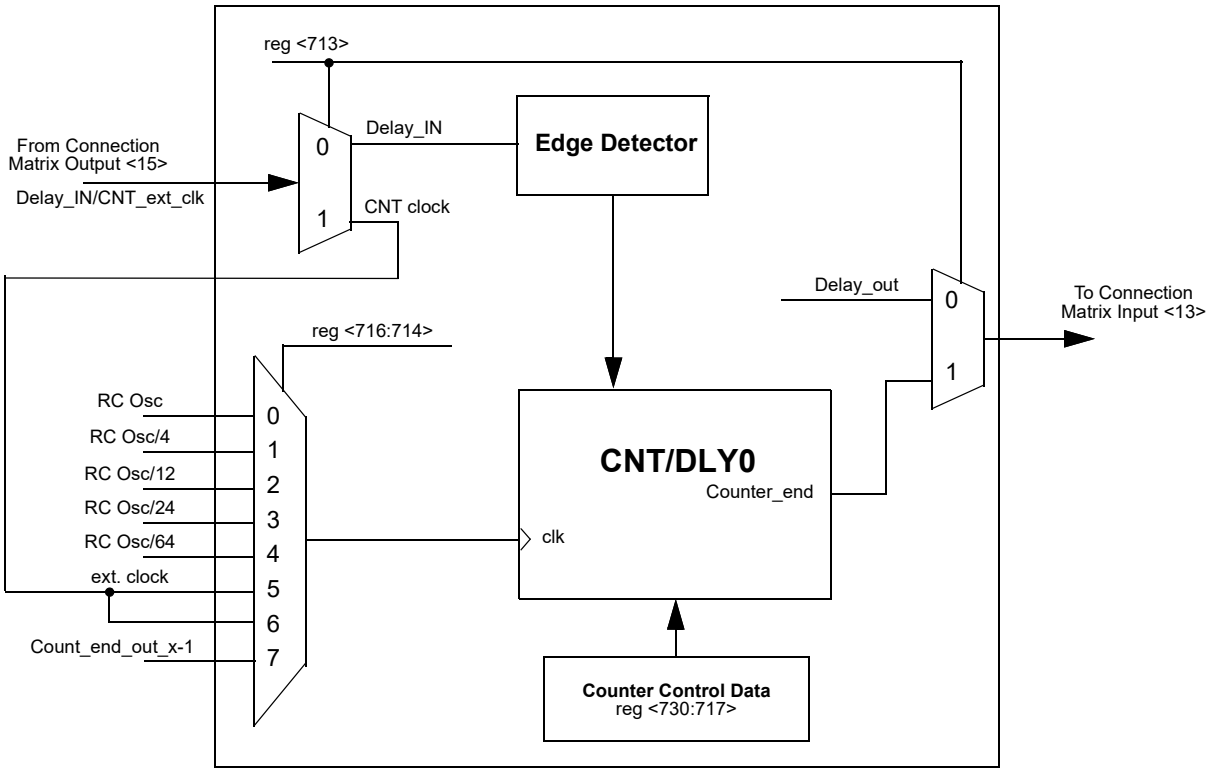

Figure 25. CNT/DLY0

Downloaded from Arrow.com.

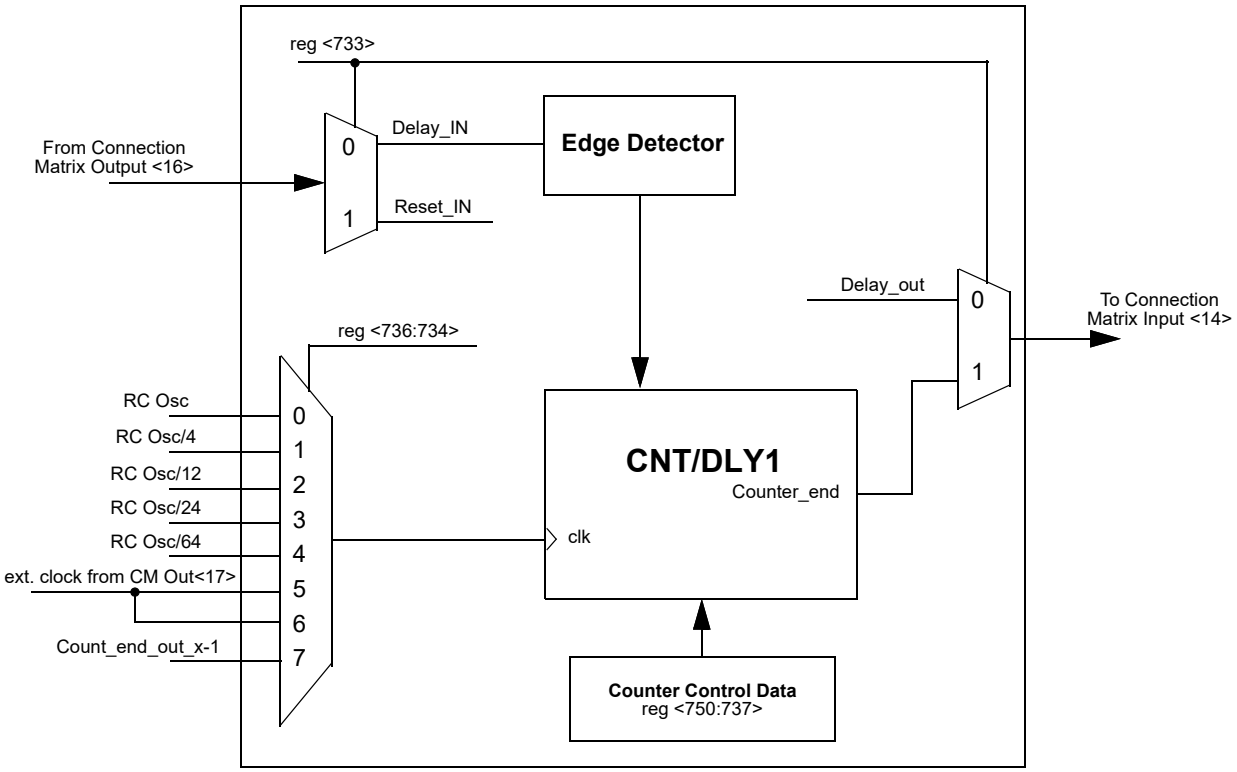

Figure 26. CNT/DLY1

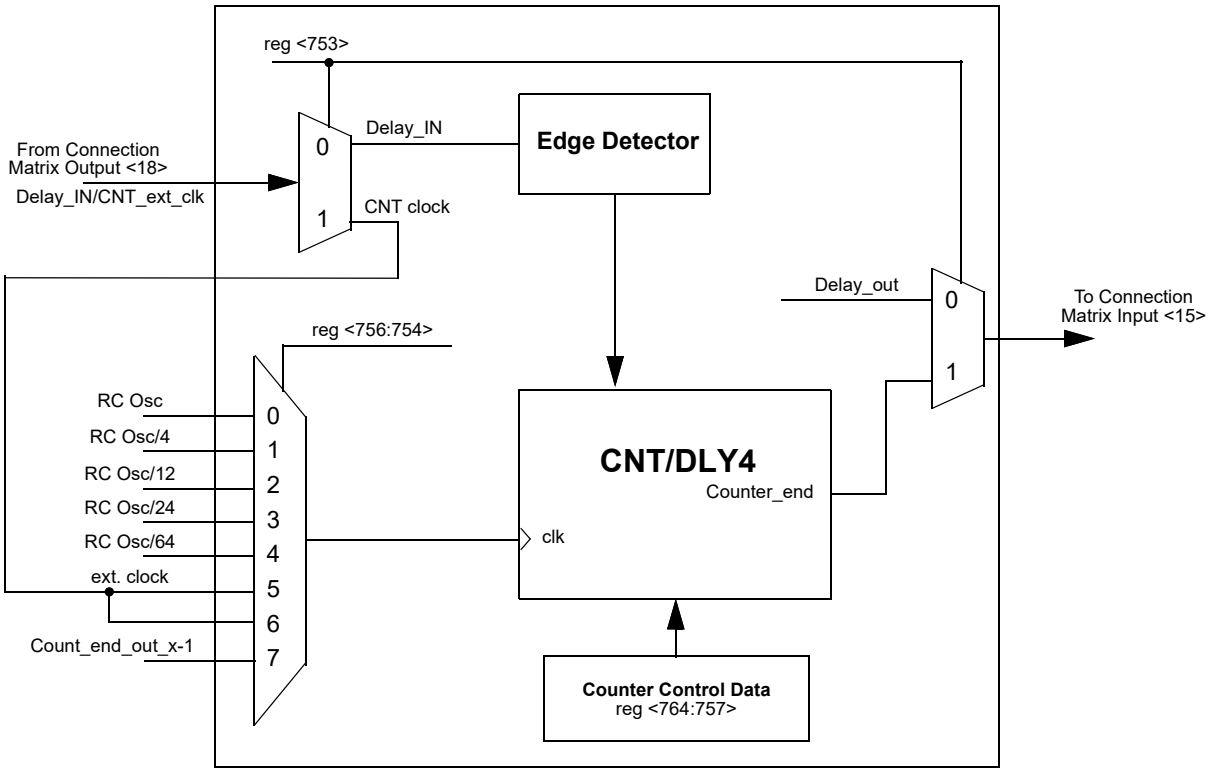

Figure 27. CNT/DLY4

Downloaded from Arrow.com.

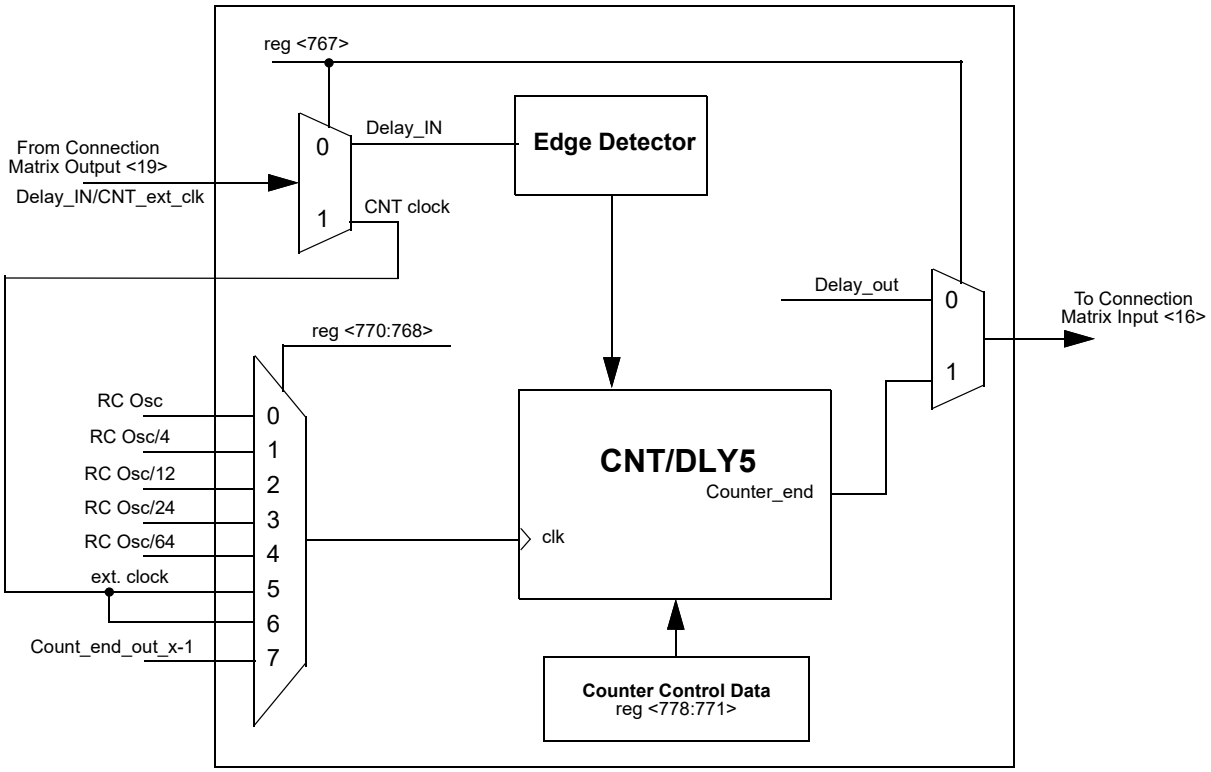

Figure 28. CNT/DLY5

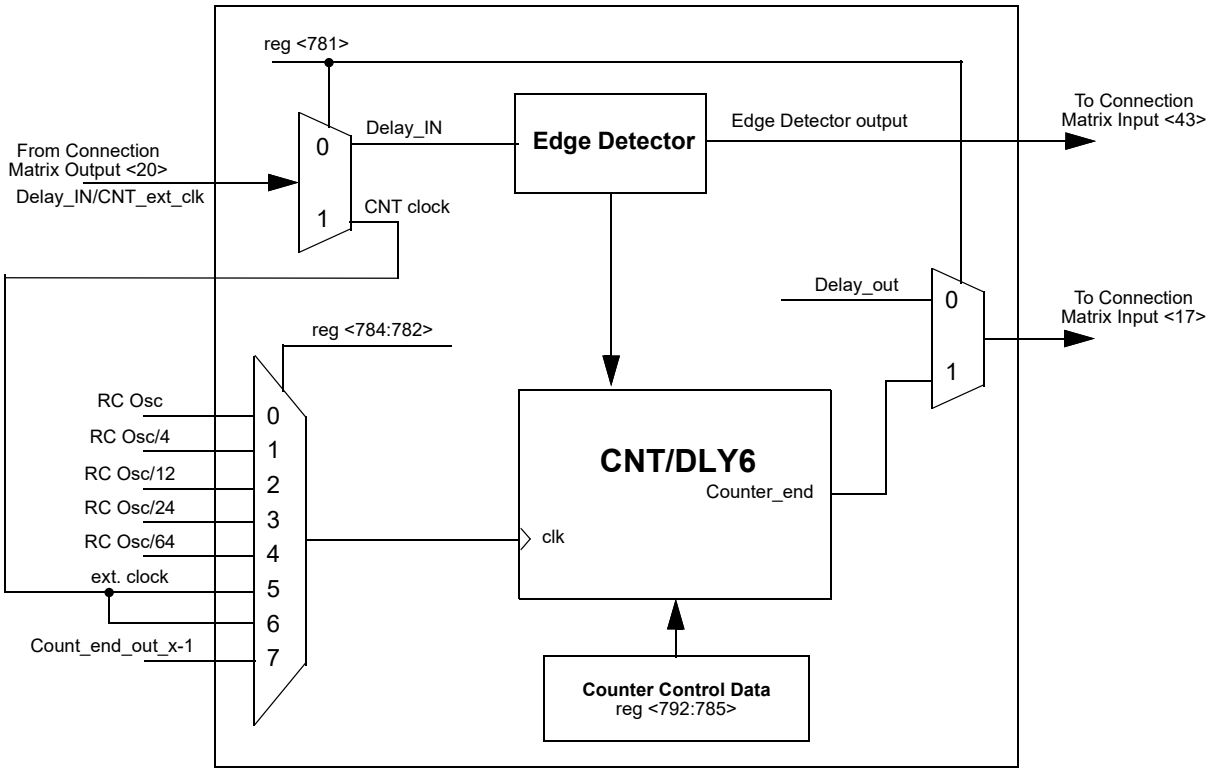

Figure 29. CNT/DLY6

Downloaded from Arrow.com.

13.1 CNT/DLY Timing Diagrams

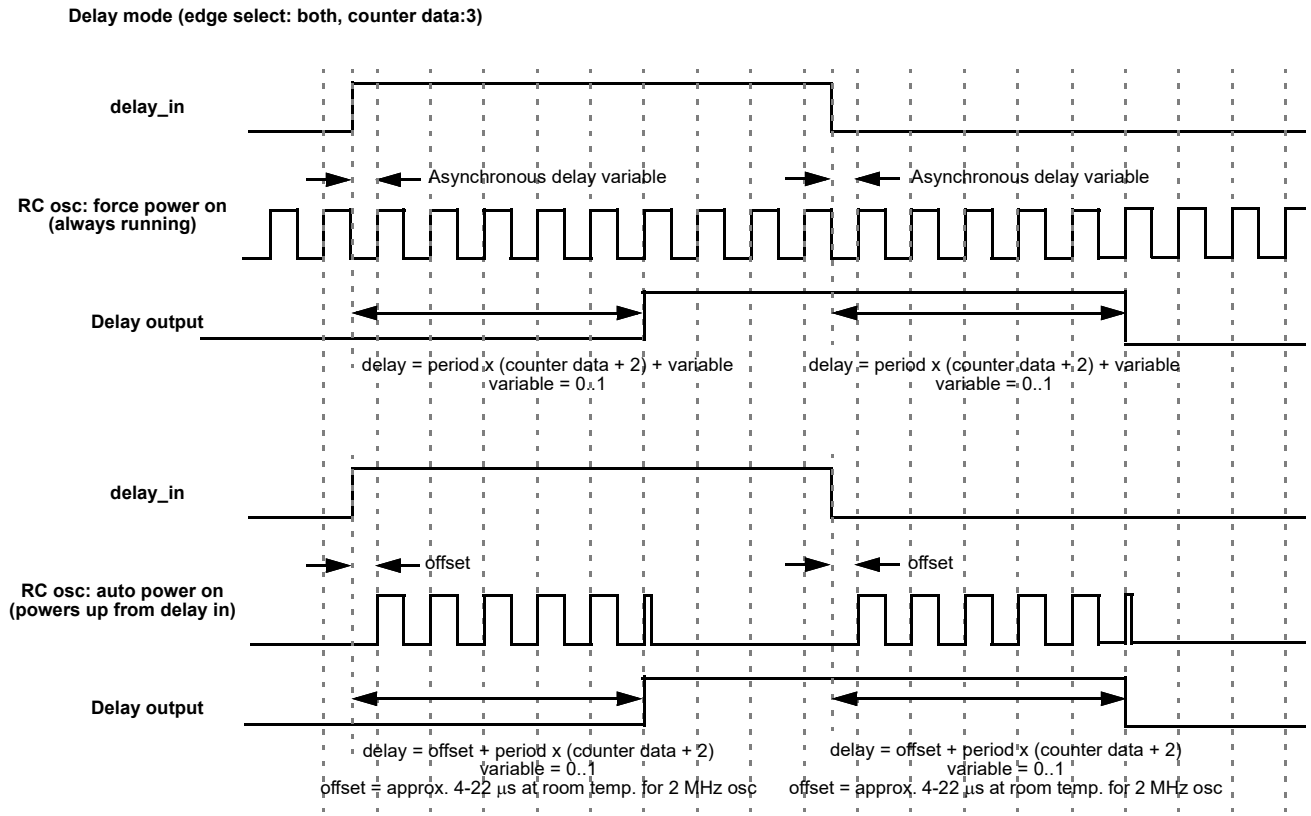

Figure 30. Delay Mode Timing

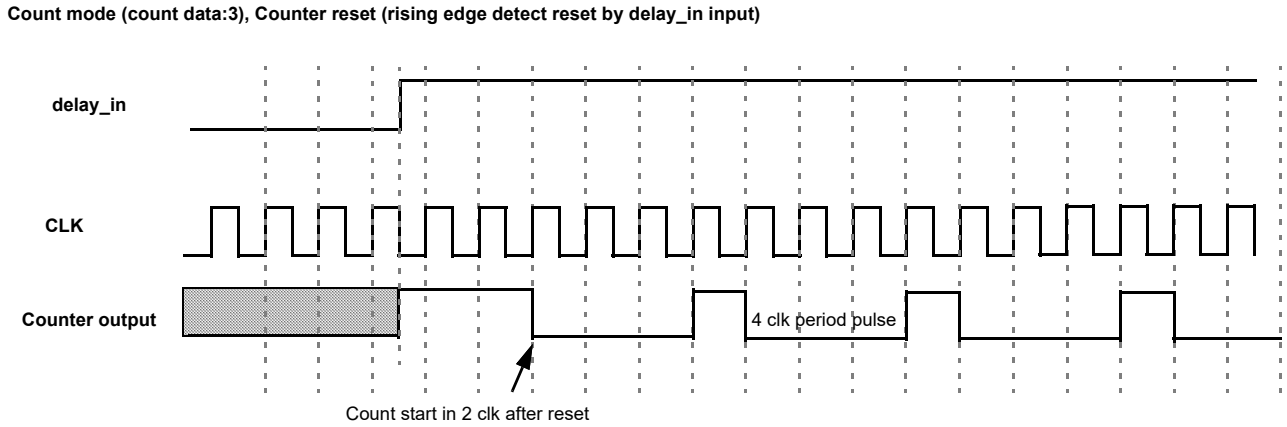

Figure 31. Counter Mode Timing

Downloaded from Arrow.com.

13.2 CNT/DLY0 Register Settings

Table 60. CNT/DLY0 Register Settings

Signal Function	Register Bit Address	Register Definition
Counter/Delay0 Mode Select	reg<713>	0: Delay Mode 1: Counter Mode
Counter/Delay0 Clock Source Select (external clock is only for counter mode)	reg<716:714>	000: Internal OSC Clock 001: OSC/4 010: OSC/12 011: OSC/24 100: OSC/64 101: External Clock 110: Reserved 111: Counter6 Overflow
Counter0 Control Data/Delay0 Time Control	reg<730:717>	1-16383: (delay time = (counter data + 2 + variable)/freq), where 0 < variable < 1
Delay0 Mode Select	reg<732:731>	00: Delay on both falling and rising edges 01: Delay on falling edge only 10: Delay on rising edge only 11: No delay on either falling or rising edges

13.3 CNT/DLY1 Register Settings

Table 61. CNT/DLY1 Register Settings

Signal Function	Register Bit Address	Register Definition
Counter/Delay1 Mode Select	reg<733>	0: Delay Mode 1: Counter Mode
Counter/Delay1 Clock Source select	reg<736:734>	000: Internal OSC Clock 001: OSC/4 010: OSC/12 011: OSC/24 100: OSC/64 101: External Clock 110: Reserved 111: Counter0 Overflow
Counter1 Control Data/Delay1 Time Control	reg<750:737>	1-16383: (delay time = (counter data + 2 + variable)/freq), where 0 < variable < 1
Delay1 Mode Select or asynchronous counter reset	reg<752:751>	00: Delay on both falling and rising edges (for delay & counter reset) 01: Delay on falling edge only (for delay & counter reset) 10: Delay on rising edge only (for delay & counter reset) 11: No delay on either falling or rising edges / high level reset for counter mode

© 2023 Renesas Electronics Corporation

Downloaded from Arrow.com.

13.4 CNT/DLY4 Register Settings

Table 62. CNT/DLY4 Register Settings

Signal Function	Register Bit Address	Register Definition
Counter/Delay4 Mode Select	reg<753>	0: Delay Mode 1: Counter Mode
Counter/Delay4 Clock Source Select (external clock is only for counter mode)	reg<756:754>	000: Internal OSC Clock 001: OSC/4 010: OSC/12 011: OSC/24 100: OSC/64 101: External Clock 110: Reserved 111: Counter3 Overflow
Counter4 Control Data/Delay4 Time Control	reg<764:757>	1-255: (delay time = (counter data + 2 + variable)/freq), where 0 < variable < 1
Delay4 Mode Select	reg<766:765>	00: Delay on both falling and rising edges 01: Delay on falling edge only 10: Delay on rising edge only 11: No delay on either falling or rising edges

13.5 CNT/DLY5 Register Settings

Table 63. CNT/DLY5 Register Settings

Signal Function	Register Bit Address	Register Definition
Counter/Delay5 Mode Select	reg<767>	0: Delay Mode 1: Counter Mode
Counter/Delay5 Clock Source Select (external clock is only for counter mode)	reg<770:768>	000: Internal OSC Clock 001: OSC/4 010: OSC/12 011: OSC/24 100: OSC/64 101: External Clock 110: Reserved 111: Counter4 Overflow
Counter5 Control Data/Delay5 Time Control	reg<778:771>	1-255: (delay time = (counter data + 2 + variable)/freq), where 0 < variable < 1
Delay5 Mode Select	reg<780:779>	00: Delay on both falling and rising edges 01: Delay on falling edge only 10: Delay on rising edge only 11: No delay on either falling or rising edges

© 2023 Renesas Electronics Corporation

Downloaded from Arrow.com.

13.6 CNT/DLY6 Register Settings

Table 64. CNT/DLY6 Register Settings

Signal Function	Register Bit Address	Register Definition
Counter/Delay6 Mode Select	reg<781>	0: Delay Mode 1: Counter Mode
Counter/Delay6 Clock Source Select (external clock is only for counter mode)	reg<784:782>	000: Internal OSC Clock 001: OSC/4 010: OSC/12 011: OSC/24 100: OSC/64 101: External Clock 110: Reserved 111: Counter5 Overflow
Counter6 Control Data/Delay6 Time Control	reg<792:785>	1-255: (delay time = (counter data + 2 + variable)/freq), where 0 < variable < 1
Delay6 Mode Select	reg<794:793>	00: Delay on both falling and rising edges 01: Delay on falling edge only 10: Delay on rising edge only 11: No delay on either falling or rising edges

Downloaded from Arrow.com.

14.0 Pipe Delay (PD)

The SLG46721 has a pipe delay logic cell that is shared with the LUT3_8 in one of the Combination Function macrocells. The user can select one of these functions to use in a design, but not both. Please see Section 10.3 3-Bit LUT or Pipe Delay Macrocell for the description of this Combination Function macrocell.

Downloaded from Arrow.com.

15.0 Programmable Delay / Edge Detector

The SLG46721 has a programmable time delay logic cell available that can generate a delay that is selectable from one of four timings (time1) configured in the GreenPAK Designer. The programmable time delay cell can generate one of four different delay patterns, rising edge detection, falling edge detection, both edge detection and both edge delay. These four patterns can be further modified with the addition of delayed edge detection, which adds an extra unit of delay as well as glitch rejection during the delay period. See the timing diagrams below for further information.

Note: *The input signal must be longer than the delay, otherwise it will be filtered out.*

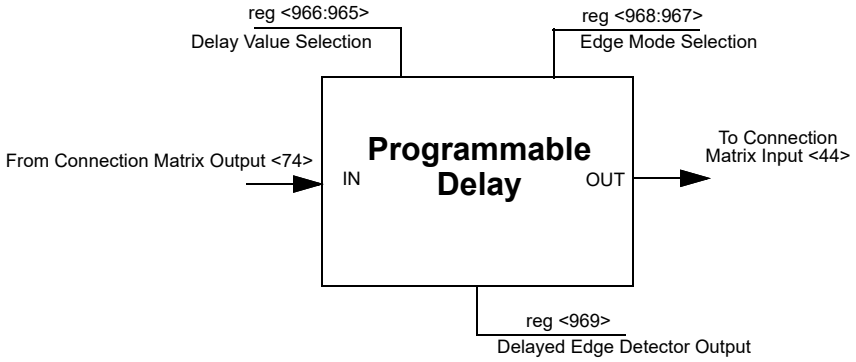

Figure 32. Programmable Delay

15.1 Programmable Delay Timing Diagram - Edge Detector Output

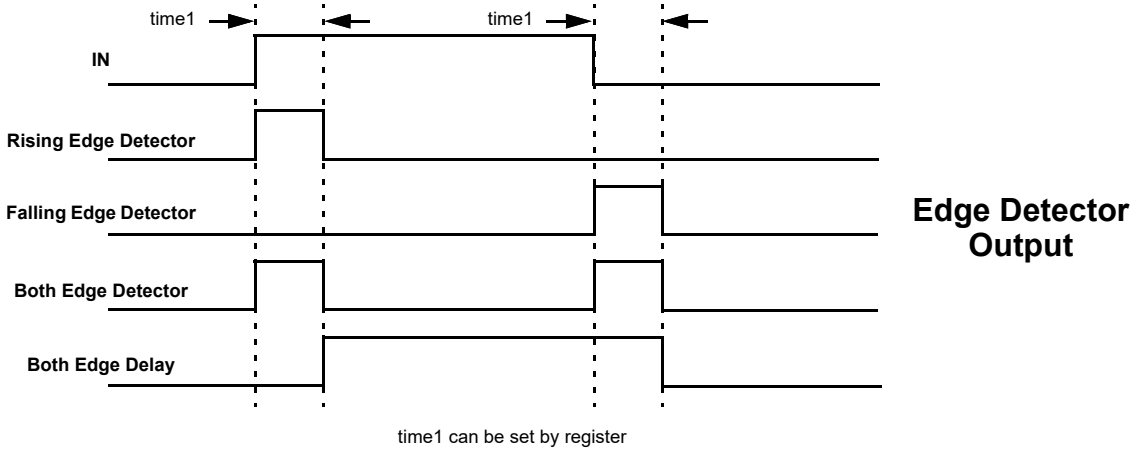

Figure 33. Edge Detector Output

Downloaded from Arrow.com.

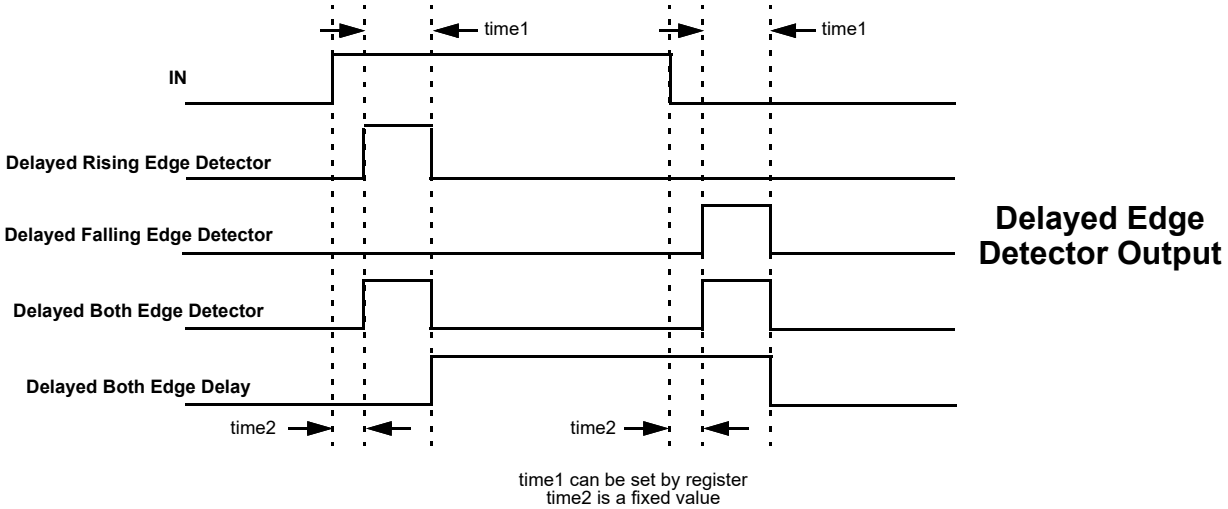

Figure 34. Delayed Edge Detector Output

Note: For delays and widths refer to *Table 4*.

15.2 Programmable Delay Timing Diagram - Glitch Filtering For Edge Detector Output

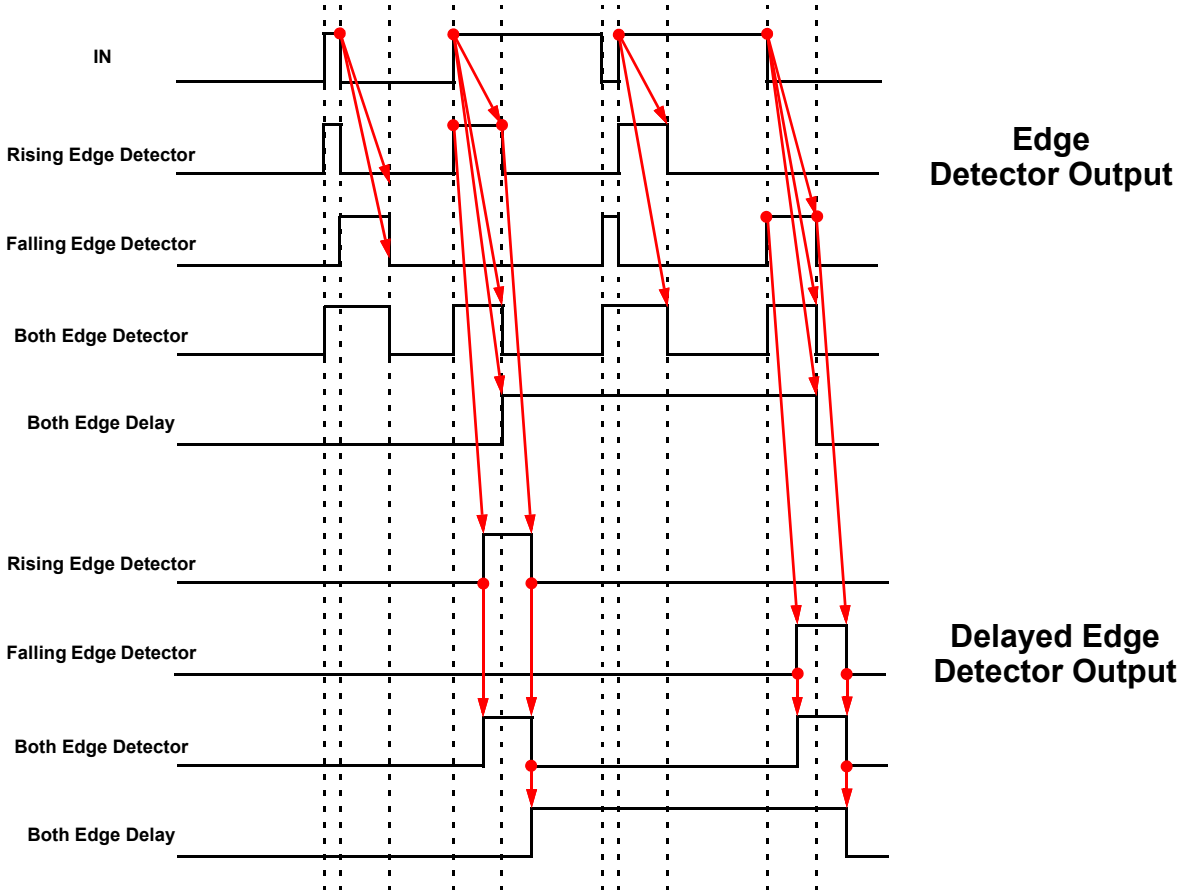

Figure 35. Glitch Filtering for Edge Detector Output

Downloaded from Arrow.com.

15.3 Programmable Delay Register Settings

Table 65. Programmable Delay Register Settings

Signal Function	Register Bit Address	Register Definition
Delay value select for programmable delay & edge detector (V_{DD} = 3.3 V, typical condition)	reg<966:965>	00: 125 ns 01: 250 ns 10: 375 ns 11: 500 ns
Select the edge mode of programmable delay & edge detector	reg<968:967>	00: Rising Edge Detector 01: Falling Edge Detector 10: Both Edge Detector 11: Both Edge Delay
Select edge detector output mode	reg<969>	0: Non-Delayed Output 1: Delayed Output

Downloaded from Arrow.com.

16.0 Additional Logic Functions

The SLG46721 has four additional logic functions that are connected directly to the Connection Matrix inputs and outputs. There are two inverters, which can switch the polarity of any Connection Matrix signal, and there are also two deglitch filters.

16.1 INV_0 Gate

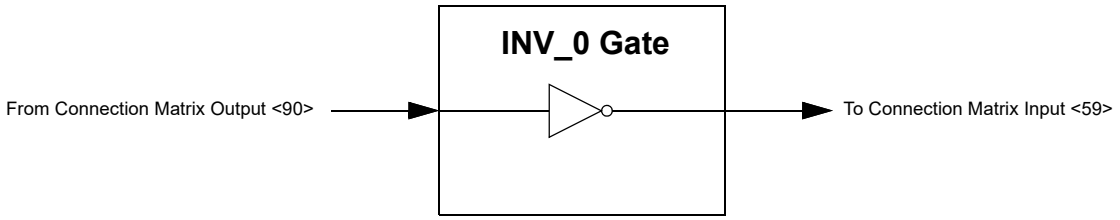

Figure 36. INV_0 Gate

16.2 INV_1 Gate

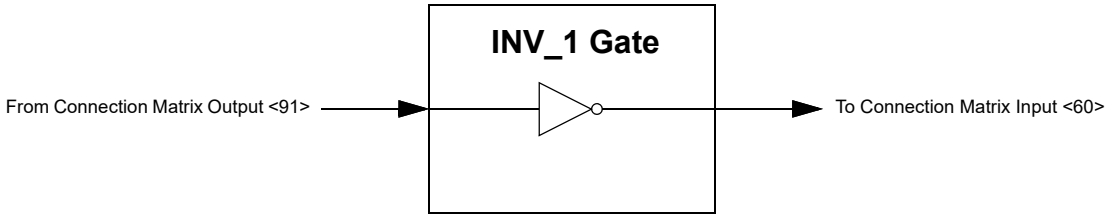

Figure 37. INV_1 Gate

16.3 Deglitch Filter

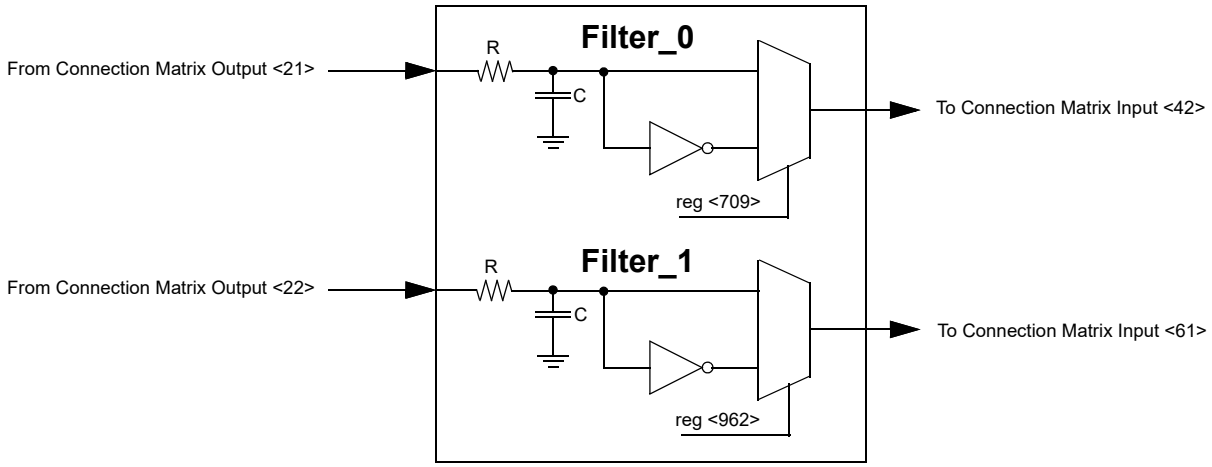

Figure 38. Deglitch Filter

Downloaded from Arrow.com.

17.0 Voltage Reference (VREF)

17.1 Voltage Reference Overview

The SLG46721 has a Voltage Reference Macrocell to provide references to the four analog comparators. This macrocell can supply a user selection of fixed voltage references, /3 and /4 reference off of the V_{DD} power supply to the device, and externally supplied voltage references from pins 7, 12 and 14. The macrocell also has the option to output reference voltages on pins 18 and 19. See table below for the available selections for each analog comparator. Also see *Figure 39.* below, which shows the reference output structure.

17.2 VREF Selection Table

Table 66. VREF Selection Table.

SEL<4:0>	CMP0_VREF	CMP1_VREF	CMP2_VREF	CMP3_VREF
11011	vref_ext_acmp0	vref_ext_acmp1	vref_ext_acmp2	vref_ext_acmp2
11010	vref_ext_acmp1	vref_ext_acmp1	vref_ext_acmp1	vref_ext_acmp1
11001	V_{DD} / 4	V_{DD} / 4	V_{DD} / 4	V_{DD} / 4
11000	V_{DD} / 3	V_{DD} / 3	V_{DD} / 3	V_{DD} / 3
10111	1.20	1.20	1.20	1.20
10110	1.15	1.15	1.15	1.15
10101	1.10	1.10	1.10	1.10
10100	1.05	1.05	1.05	1.05
10011	1.00	1.00	1.00	1.00
10010	0.95	0.95	0.95	0.95
10001	0.90	0.90	0.90	0.90
10000	0.85	0.85	0.85	0.85
01111	0.80	0.80	0.80	0.80
01110	0.75	0.75	0.75	0.75
01101	0.70	0.70	0.70	0.70
01100	0.65	0.65	0.65	0.65
01011	0.60	0.60	0.60	0.60
01010	0.55	0.55	0.55	0.55
01001	0.50	0.50	0.50	0.50
01000	0.45	0.45	0.45	0.45
00111	0.40	0.40	0.40	0.40
00110	0.35	0.35	0.35	0.35
00101	0.30	0.30	0.30	0.30
00100	0.25	0.25	0.25	0.25
00011	0.20	0.20	0.20	0.20
00010	0.15	0.15	0.15	0.15
00001	0.10	0.10	0.10	0.10
00000	0.05	0.05	0.05	0.05

V_{DD}	Practial VREF Range	Note
2.0 V - 5.5 V	50 mV ~1.2 V	
1.7 V - 2.0 V	50 mV ~1.1 V	Higher than 1.1 V negative input, the comparator may show wrong result

Downloaded from Arrow.com.

17.3 VREF Block Diagram

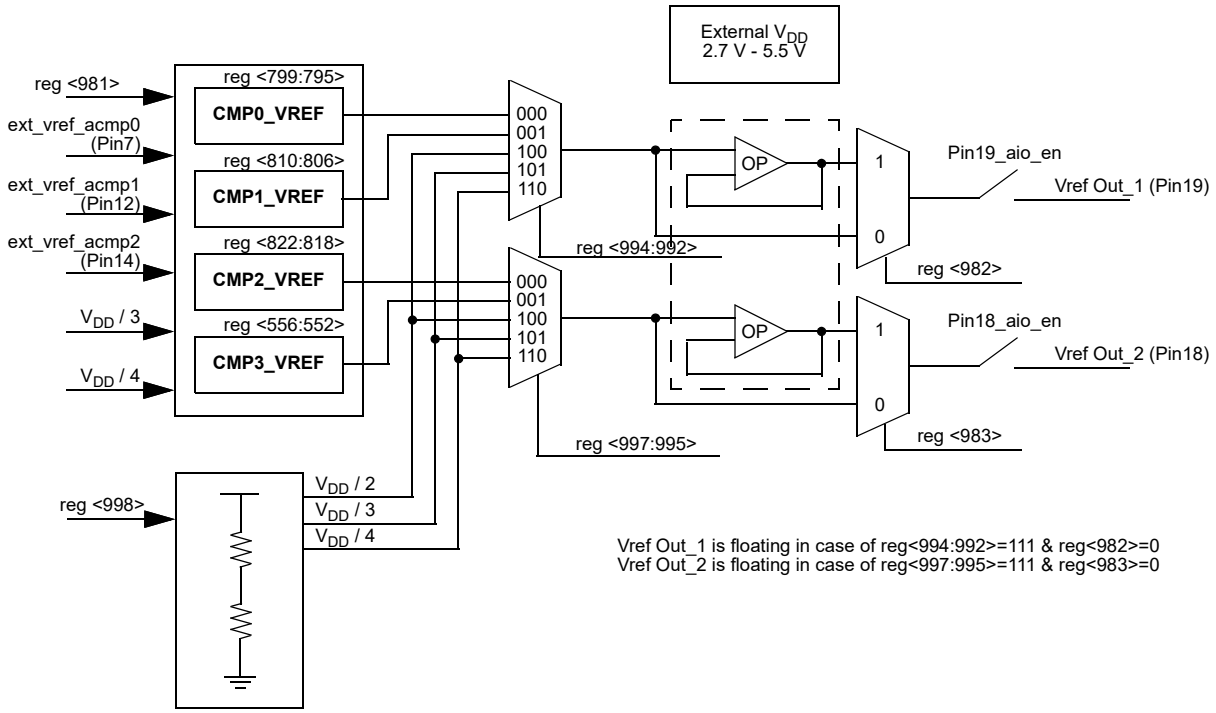

Figure 39. Voltage Reference Block Diagram

Downloaded from Arrow.com.

18.0 RC Oscillator (RC Osc)

18.1 RC Oscillator Overview

The SLG46721 has two internal RC oscillators, one that runs at 25 kHz and one that runs at 2 MHz. The user can select one of these fundamental frequencies for the RC OSC Macrocell, or the fundamental frequency can also come from an external clock input (Pin 20). There are two divider stages that allow the user flexibility for introducing clock signals on various Connection Matrix Input lines. The first stage divider allows the selection of /1, /2, /4 or /8 divide down frequency from the fundamental. The second stage divider has an input of one frequency from the first stage divider, and outputs five different frequencies on Connection Matrix Input lines <45>, <46>, <47>, <48>, and <49>. See *Figure 40.* below for details of the frequencies for each of these five Connection Matrix Inputs.

If PWR DOWN input of oscillator is LOW, the oscillator will be turned on. If PWR DOWN input of oscillator is HIGH the oscillator will be turned off. The PWR DOWN signal has the highest priority.

18.2 RC OSC Block Diagram

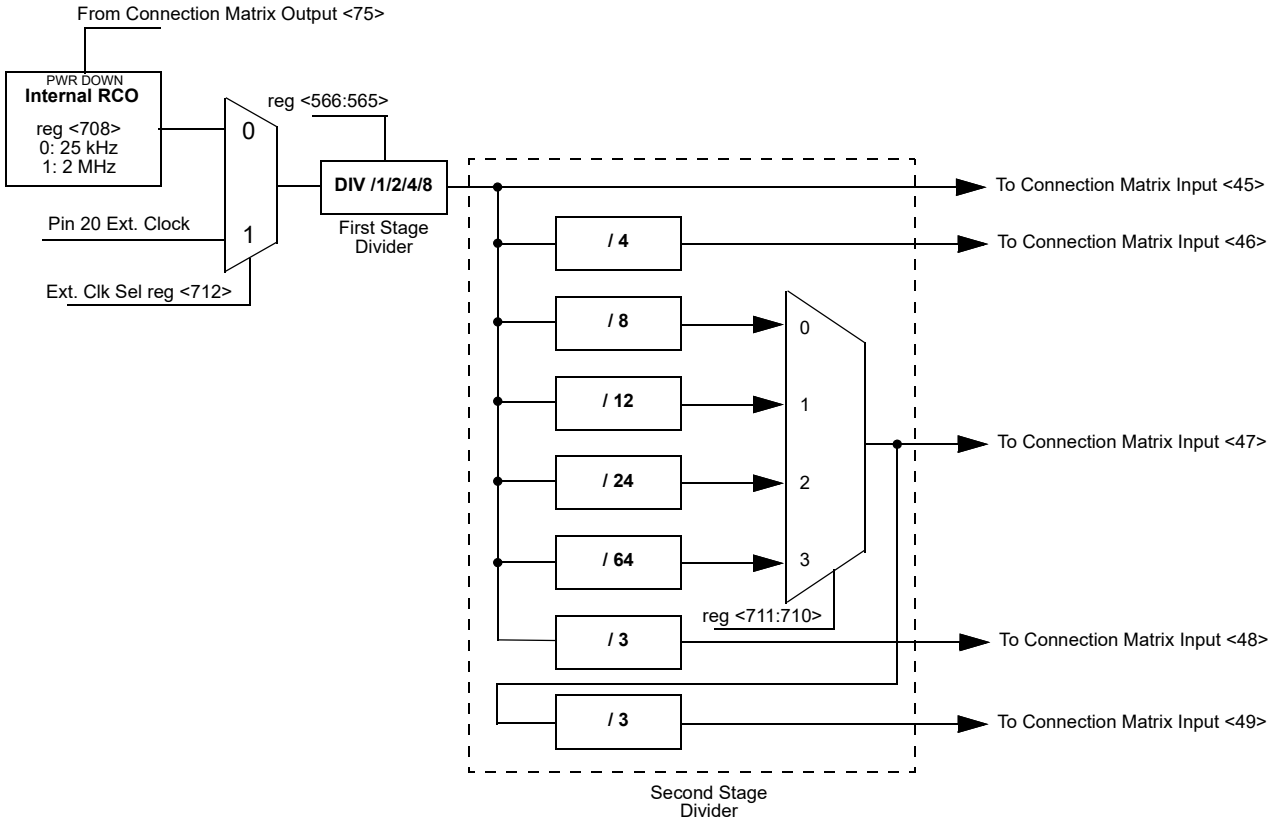

Figure 40. RC OSC Block Diagram

Downloaded from Arrow.com.

19.0 Power On Reset (POR)

19.1 POR Overview

The Power On Reset (POR) Macrocell will produce a high or “1” signal as an output when the device power supply (V_{DD}) rises to approximately 1.4 V. The typical internal delay for POR to release POR_IO will be 1 ms + α depending on the power slope, because there is adaptive power-up sequence. The next internal signal will be POR_CORE and then POR_IO_DLY, each of which is further delayed by approximately 1 µs. The rise of POR_IO_DLY will trigger the I/O pins to exit tri-state, and the device will become active.

19.2 POR Timing Diagram

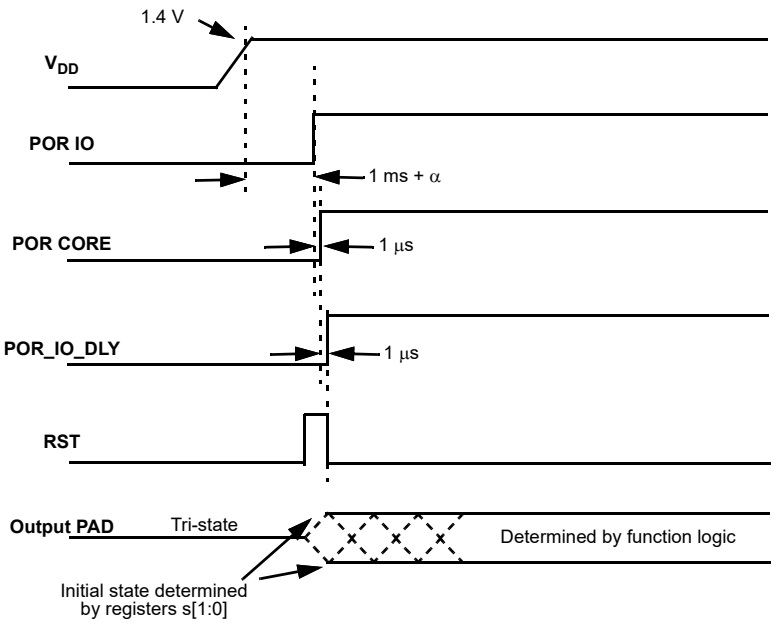

Figure 41. POR Timing Diagram

19.2.1 Initialization

All internal macrocells by default have initial low level. Starting from indicated powerup time of 1.15 V - 1.6 V, macrocells in GPAK3 are powered on while forced to the reset state, All outputs are in Hi-Z and chip starts loading data from NVM. Then the reset signal is released for internal macrocells and they start to initialize according to the following sequence:

1. Input PINs, ACMP, pull up/down;
2. LUTs;
3. DFFs, Delays/Counters, Pipe Delay;
4. POR output to matrix;
5. Output PIN corresponds to the internal logic

The VREF output pin driving signal can precede POR output signal going high by 3 µs - 5 µs. The POR signal going high indicates the mentioned powerup sequence is complete.

Note: The maximum voltage applied to any PIN should not be higher than the V_{DD} level. There are ESD Diodes between PIN –> V_{DD} and PIN –> GND on each PIN. So if the input signal applied to PIN is higher than V_{DD}, then current will sink through the diode to V_{DD}. Exceeding V_{DD} results in leakage current on the input PIN, and V_{DD} will be pulled up, following the voltage on the input PIN.There is no effect from input pin when input voltage is applied at the same time as V_{DD}.

Downloaded from Arrow.com.

19.2.2 Power Down

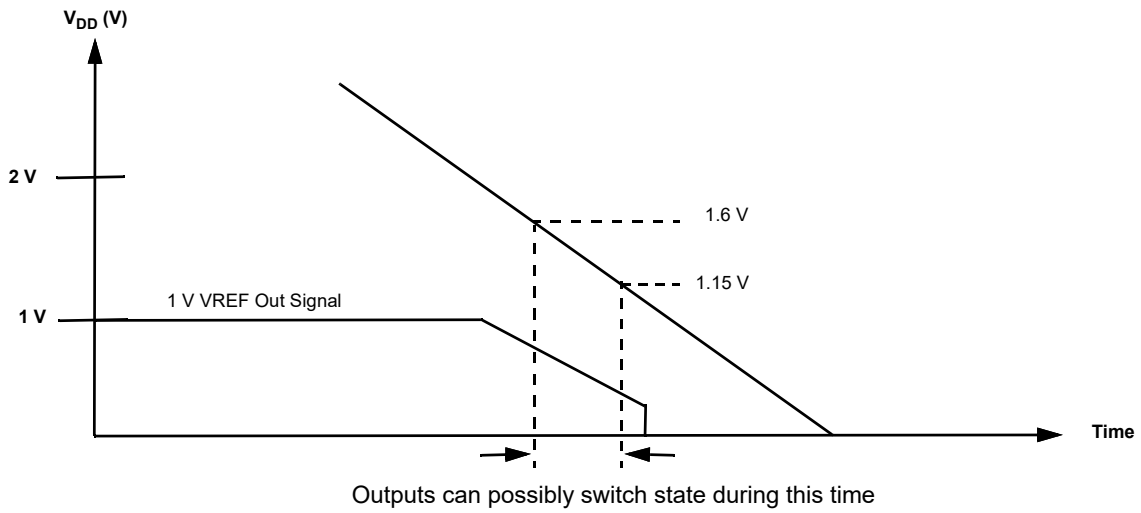

Figure 42. Power Down

During powerdown, macrocells in SLG46721 are powered off and logic macrocells may switch states after falling below 1.4 V. The I/O buffers are disabled when POR goes low at V_{DD}~1 V. Please note that during a slow rampdown, outputs can possibly switch state during this time.

Downloaded from Arrow.com.

20.0 Appendix A - SLG46721 Register Definition

Register Bit Address	Signal Function	Register Bit Definition
reg<5:0>	Matrix Out: PIN3 Digital Output Source	
reg<11:6>	Matrix Out: Output Enable of PIN3	
reg<17:12>	Matrix Out: PIN4 Digital Output Source	
reg<23:18>	Matrix Out: PIN5 Digital Output Source	
reg<29:24>	Matrix Out: Output Enable of PIN5	
reg<35:30>	Matrix Out: PIN6 Digital Output Source	
reg<41:36>	Matrix Out: PIN7 Digital Output Source	
reg<47:42>	Matrix Out: Output Enable of PIN7	
reg<53:48>	Matrix Out: PIN8 Digital Output Source	
reg<59:54>	Matrix Out: PIN9 Digital Output Source	
reg<65:60>	Matrix Out: Output Enable of PIN9	
reg<71:66>	Matrix Out: PIN10 Digital Output Source (Super Drive)	
reg<77:72>	Matrix Out: pdb (power down) for ACMP0	
reg<83:78>	Matrix Out: pdb (power down) for ACMP1	
reg<89:84>	Matrix Out: pdb (power down) for ACMP2	
reg<95:90>	Matrix Out: Input for delay0 or Counter0 external clock	
reg<101:96>	Matrix Out: Input for delay1 or counter1 reset input	
reg<107:102>	Matrix Out: Input for Counter1 external clock or delay1 external clock	
reg<113:108>	Matrix Out: Input for delay4 or Counter4 external clock	
reg<119:114>	Matrix Out: Input for delay5 or Counter5 external clock	
reg<125:120>	Matrix Out: Input for delay6 or Counter6 external clock	
reg<131:126>	Matrix Out: Input for filter_0	
reg<137:132>	Matrix Out: Input for filter_1	
reg<143:138>	Matrix Out: pdb (power down) for ACMP3	
reg<149:144>	Matrix Out: In0 of LUT3_9	
reg<155:150>	Matrix Out: In1 of LUT3_9	
reg<161:156>	Matrix Out: In2 of LUT3_9	
reg<167:162>	Matrix Out: In0 of LUT4_0 or Input for Counter2(delay2) external clock	
reg<173:168>	Matrix Out: In1 of LUT4_0 or Input for delay2(counter2 reset input)	
reg<179:174>	Matrix Out: In2 of LUT4_0	
reg<185:180>	Matrix Out: In3 of LUT4_0	
reg<191:186>	Matrix Out: In0 of LUT4_1 or Input for Counter3(delay3) external clock	
reg<197:192>	Matrix Out: In1 of LUT4_1 or Input for delay3(counter3 reset input)	
reg<203:198>	Matrix Out: In2 of LUT4_1	
reg<209:204>	Matrix Out: In3 of LUT4_1	
reg<215:210>	Matrix Out: In0 of LUT3_0	
reg<221:216>	Matrix Out: In1 of LUT3_0	
reg<227:222>	Matrix Out: In2 of LUT3_0	

© 2023 Renesas Electronics Corporation

Downloaded from Arrow.com.

Register Bit Address	Signal Function	Register Bit Definition
reg<233:228>	Matrix Out: In0 of LUT3_1	
reg<239:234>	Matrix Out: In1 of LUT3_1	
reg<245:240>	Matrix Out: In2 of LUT3_1	
reg<251:246>	Matrix Out: In0 of LUT3_2 or Clock Input of DFF2	
reg<257:252>	Matrix Out: In1 of LUT3_2 or Data Input of DFF2	
reg<263:258>	Matrix Out: In2 of LUT3_2 or Resetb Input of DFF2	
reg<269:264>	Matrix Out: In0 of LUT3_3 or Clock Input of DFF3	
reg<275:270>	Matrix Out: In1 of LUT3_3 or Data Input of DFF3	
reg<281:276>	Matrix Out: In2 of LUT3_3 or Resetb (Setb) of DFF3	
reg<287:282>	Matrix Out: In0 of LUT3_4	
reg<293:288>	Matrix Out: In1 of LUT3_4	
reg<299:294>	Matrix Out: In2 of LUT3_4	
reg<305:300>	Matrix Out: In0 of LUT3_5	
reg<311:306>	Matrix Out: In1 of LUT3_5	
reg<317:312>	Matrix Out: In2 of LUT3_5	
reg<323:318>	Matrix Out: In0 of LUT3_6	
reg<329:324>	Matrix Out: In1 of LUT3_6	
reg<335:330>	Matrix Out: In2 of LUT3_6	
reg<341:336>	Matrix Out: In0 of LUT3_7	
reg<347:342>	Matrix Out: In1 of LUT3_7	
reg<353:348>	Matrix Out: In2 of LUT3_7	
reg<359:354>	Matrix Out: In0 of LUT3_8 or Input of Pipe delay	
reg<365:360>	Matrix Out: In1 of LUT3_8 or Resetb of Pipe delay	
reg<371:366>	Matrix Out: In2 of LUT3_8 or Clock of Pipe delay	
reg<377:372>	Matrix Out: In0 of LUT2_0 or Clock Input of DFF4	
reg<383:378>	Matrix Out: In1 of LUT2_0 or Data Input of DFF4	
reg<389:384>	Matrix Out: In0 of LUT2_1 or Clock Input of DFF5	
reg<395:390>	Matrix Out: In1 of LUT2_1 or Data Input of DFF5	
reg<401:396>	Matrix Out: In0 of LUT2_2 or Clock Input of DFF6	
reg<407:402>	Matrix Out: In1 of LUT2_2 or Data Input of DFF6	
reg<413:408>	Matrix Out: In0 of LUT2_3 or Clock Input of DFF7	
reg<419:414>	Matrix Out: In1 of LUT2_3 or Data Input of DFF7	
reg<425:420>	Matrix Out: In0 of LUT2_4	
reg<431:426>	Matrix Out: In1 of LUT2_4	
reg<437:432>	Matrix Out: In0 of LUT2_5	
reg<443:438>	Matrix Out: In1 of LUT2_5	
reg<449:444>	Matrix Out: Input for programmable delay & edge detec-tor	
reg<455:450>	Matrix Out: Power down for osc	
reg<461:456>	Matrix Out: Pin12 Digital Output Source (Super Drive)	
reg<467:462>	Matrix Out: Pin13 Digital Output Source	
reg<473:468>	Matrix Out: Pin13 Output Enable	
reg<479:474>	Matrix Out: Pin14 Digital Output Source	

Downloaded from Arrow.com.

Register Bit Address	Signal Function	Register Bit Definition
reg<485:480>	Matrix Out: Pin14 Output Enable	
reg<491:486>	Matrix Out: Pin15 Digital Output Source	
reg<497:492>	Matrix Out: Pin16 Digital Output Source	
reg<503:498>	Matrix Out: Pin16 Output Enable	
reg<509:504>	Matrix Out: Pin17 Digital Output Source	
reg<515:510>	Matrix Out: Pin18 Digital Output Source	
reg<521:516>	Matrix Out: Pin18 Output Enable	
reg<527:522>	Matrix Out: Pin19 Digital Output Source	
reg<533:528>	Matrix Out: Pin19 Output Enable	
reg<539:534>	Matrix Out: Pin20 Digital Output Source	
reg<545:540>	Matrix Out: Input of INV_0	
reg<551:546>	Matrix Out: Input of INV_1	
reg<556:552>	ACMP3 IN voltage select	00000: 50 mV 00001: 100 mV 00010: 150 mV 00011: 200 mV 00100: 250 mV 00101: 300 mV 00110: 350 mV 00111: 400 mV 01000: 450 mV 01001: 500 mV 01010: 550 mV 01011: 600 mV 01100: 650 mV 01101: 700 mV 01110: 750 mV 01111: 800 mV 10000: 850 mV 10001: 900 mV 10010: 950 mV 10011: 1 V 10100: 1.05V 10101: 1.1 V 10110: 1.15V 10111: 1.2 V 11000: $V_{DD}/3$ 11001: $V_{DD}/4$ 11010: EXT_VREF (PIN12) 11011: EXT_VREF (PIN14)
reg<558:557>	ACMP3 hysteresis Enable	00: Disabled (0 mV) 01: Enabled (25 mV) 10: Enabled (50 mV) 11: Enabled (200 mV)
reg<560:559>	ACMP3 positive Input divider	00: 1.0X 01: 0.5X 10: 0.33X 11: 0.25X
reg<561>	ACMP3 low bandwidth (typ: Max.1 Mhz) enable.	0: Off 1: On
reg<562>	ACMP3 positive input source select PIN6	0: Disabled 1: Enabled
reg<563>	ACMP3 positive input source select PIN13	0: Disabled 1: Enabled
reg<564>	V_{DD} bypass enable	0: Regulator auto on 1: Regulator off (V_{DD} bypass)
reg<566:565>	OSC clock pre-divider	00: Div1 01: Div2 10: Div4 11: Div8
reg<568:567>	Reserved	Reserved
reg<569>	Analog buffer at ACMP0 enable	0: Disable analog buffer 1: Enable analog buffer

Downloaded from Arrow.com.

Register Bit Address	Signal Function	Register Bit Definition
reg<570>	Analog buffer at ACMP1 enable	0: Disable analog buffer 1: Enable analog buffer
reg<574:571>	LUT2_0 Data (if reg.<595>=0) or DFF4 / Latch Select	
	reg<571> DFF4 or Latch select	0: DFF function 1: Latch function
	reg<572> DFF4 output select	0: Q output 1: nQ output
	reg<573> DFF4 initial polarity select	0: Low 1: High
reg<578:575>	LUT2_1 Data (if reg.<596>=0) or DFF5 / Latch Select	
	reg<575> DFF5 or Latch select	0: DFF function 1: Latch function
	reg<576> DFF5 output select	0: Q output 1: nQ output
	reg<577> DFF5 initial polarity select	0: Low 1: High
reg<582:579>	LUT2_2 Data (if reg.<597>=0) or DFF6 / Latch Select	
	reg<579> DFF6 or Latch select	0: DFF function 1: Latch function
	reg<580> DFF6 output select	0: Q output 1: nQ output
	reg<581> DFF6 initial polarity select	0: Low 1: High
reg<586:583>	LUT2_3 Data (if reg.<598>=0) or DFF7 / Latch Select	
	reg<583> DFF7 or Latch select	0: DFF function 1: Latch function
	reg<584> DFF7 output select	0: Q output 1: nQ output
	reg<585> DFF7 initial polarity select	0: Low 1: High
reg<590:587>	LUT2_4 data	
reg<594:591>	LUT2_5 data	
reg<595>	LUT2_0 or DFF4 select	0: LUT2_0 1: DFF4
reg<596>	LUT2_1 or DFF5 select	0: LUT2_1 1: DFF5
reg<597>	LUT2_2 or DFF6 select	0: LUT2_2 1: DFF6
reg<598>	LUT2_3 or DFF7 select	0: LUT2_3 1: DFF7
reg<606:599>	LUT3_0 data	
reg<614:607>	LUT3_1 data	

Downloaded from Arrow.com.

Register Bit Address	Signal Function	Register Bit Definition
reg<622:615>	LUT3_2 Data (if reg.<671>=0) or DFF2 / Latch Select)	
	reg<615> DFF2 or Latch select	0: DFF function 1: Latch function
	reg<616> DFF2 output select	0: Q output 1: nQ output
	reg<617> DFF2 rstb/setb select	0: resetb from matrix output 1: setb from matrix output
	reg<618> DFF2 initial polarity select	0: Low 1: High
reg<630:623>	LUT3_3 Data (if reg.<672>=0) or DFF3 / Latch Select	
	reg<623> DFF3 or Latch select	0: DFF function 1: Latch function
	reg<624> DFF3 output select	0: Q output 1: nQ output
	reg<625> DFF3 rstb/setb select	0: resetb from matrix output 1: setb from matrix output
	reg<626> DFF3 initial polarity select	0: Low 1: High
reg<638:631>	LUT3_4 data	
reg<646:639>	LUT3_5 data	
reg<654:647>	LUT3_6 data	
reg<662:655>	LUT3_7 data	
reg<670:663>	LUT3_8 data or pipe number select	
	reg<666:663>: OUT0 select	
	reg<670:667>: OUT1 select	
reg<671>	LUT3_2 or DFF2 select	0: LUT3_2 1: DFF2
reg<672>	LUT3_3 or DFF3 select	0: LUT3_3 1: DFF3
reg<688:673>	LUT4_0 data or Counter / Delay 2 mode selection	
	reg<673> Counter/delay2 mode selection	0: Delay Mode 1: Counter Mode
	reg<676:674> Counter/delay2 Clock Source select	000: Internal OSC Clock 001: OSC/4 010: OSC/12 011: OSC/24 100: OSC/64 101: External Clock 110: Reserved 111: Counter1 Overflow
	reg<684:677> Counter/delay2 Control Data	1-255: (delay time = (counter data + 2 + variable)/freq), where 0 < variable < 1
	reg<686:685> Delay2 Mode Select or asynchronous counter reset	00: on both falling and rising edges (for delay & counter reset) 01: on falling edge only (for delay & counter reset) 10: on rising edge only (for delay & counter reset) 11: no delay on either falling or rising edges / high level reset

Downloaded from Arrow.com.

Register Bit Address	Signal Function	Register Bit Definition
reg<704:689>	LUT4_1 data or Counter / Delay 3 mode selection	
	reg<689> Counter/delay3 mode selection	0: Delay Mode 1: Counter Mode
	reg<692:690> Counter/delay3 Clock Source select	000: Internal OSC Clock 001: OSC/4 010: OSC/12 011: OSC/24 100: OSC/64 101: External Clock 110: Reserved 111: Counter2 Overflow
	reg<700:693> Counter/delay3 Control Data	1-255: (delay time = (counter data + 2 + variable)/freq), where 0 < variable < 1
	reg<702:701> Delay3 Mode Select or asynchronous counter reset	00: on both falling and rising edges (for delay & counter reset) 01: on falling edge only (for delay & counter reset) 10: on rising edge only (for delay & counter reset) 11: no delay on either falling or rising edges / high level reset
reg<705>	LUT4_0 or Counter2 select	0: LUT4_0 1: Counter2
reg<706>	LUT4_1 or Counter3 select	0: LUT4_1 1: Counter3
reg<707>	Force RC oscillator on	0: Auto Power on 1: Force Power on
reg<708>	RC Oscillator frequency control	0: 25k 1: 2M
reg<709>	Filter_0 output polarity select	0: Filter_0 output 1: Filter_0 output inverted
reg<711:710>	Internal Oscillator frequency divider control	00: OSC/8 01: OSC/12 10: OSC/24 11: OSC/64
reg<712>	External Clock Source Select	0: Internal Oscillator 1: External Clock from Pin20
reg<713>	Counter/delay0 mode selection	0: Delay Mode 1: Counter Mode
reg<716:714>	Counter/delay0 Clock Source select	000: Internal OSC Clock 001: OSC/4 010: OSC/12 011: OSC/24 100: OSC/64 101: External Clock 110: Reserved 111: Counter6 Overflow
reg<730:717>	Counter0 Control Data/Delay0 Time Control	1-16383: (delay time = (counter data + 2 + variable)/freq), where 0 < variable < 1
reg<732:731>	Delay0 Mode Select	00: Delay on both falling and rising edges 01: Delay on falling edge only 10: Delay on rising edge only 11: No delay on either falling or rising edges

Downloaded from Arrow.com.

Register Bit Address	Signal Function	Register Bit Definition
reg<733>	Counter/delay1 mode selection	0: Delay Mode 1: Counter Mode
reg<736:734>	Counter/delay1 Clock Source select	000: Internal OSC Clock 001: OSC/4 010: OSC/12 011: OSC/24 100: OSC/64 101: External Clock 110: Reserved 111: Counter0 Overflow
reg<750:737>	Counter1 Control Data/Delay1 Time Control	1-16383: (delay time = (counter data + 2 + variable)/freq), where 0 < variable < 1
reg<752:751>	Delay1 Mode Select or asynchronous counter reset	00: on both falling and rising edges (for delay & counter reset) 01: on falling edge only (for delay & counter reset) 10: on rising edge only (for delay & counter reset) 11: no delay on either falling or rising edges / high level reset for counter mode
reg<753>	Counter/delay4 mode selection	0: Delay Mode 1: Counter Mode
reg<756:754>	Counter/delay4 Clock Source select	000: Internal OSC Clock 001: OSC/4 010: OSC/12 011: OSC/24 100: OSC/64 101: External Clock 110: Reserved 111: Counter3 Overflow
reg<764:757>	Counter4 Control Data/Delay4 Time Control	1-255: (delay time = (counter data + 2 + variable)/freq), where 0 < variable < 1
reg<766:765>	Delay4 Mode Select	00: Delay on both falling and rising edges 01: Delay on falling edge only 10: Delay on rising edge only 11: No delay on either falling or rising edges
reg<767>	Counter/delay5 mode selection	0: Delay Mode 1: Counter Mode
reg<770:768>	Counter/delay5 Clock Source select	000: Internal OSC Clock 001: OSC/4 010: OSC/12 011: OSC/24 100: OSC/64 101: External Clock 110: Reserved 111: Counter4 Overflow
reg<778:771>	Counter5 Control Data/Delay5 Time Control	1-255: (delay time = (counter data + 2 + variable)/freq), where 0 < variable < 1
reg<780:779>	Delay5 Mode Select	00: Delay on both falling and rising edges 01: Delay on falling edge only 10: Delay on rising edge only 11: No delay on either falling or rising edges
reg<781>	Counter/Delay6 output source select	0: Delay Output 1: Counter Output

Downloaded from Arrow.com.

Register Bit Address	Signal Function	Register Bit Definition
reg<784:782>	Counter/delay6 Clock Source select	000: Internal OSC Clock 001: OSC/4 010: OSC/12 011: OSC/24 100: OSC/64 101: External Clock 110: Reserved 111: Counter5 Overflow
reg<792:785>	Counter6 Control Data/Delay6 Time Control	1-255: (delay time = (counter data + 2 + variable)/freq), where 0 < variable < 1
reg<794:793>	Delay6 Mode Select	00: Delay on both falling and rising edges 01: Delay on falling edge only 10: Delay on rising edge only 11: No delay on either falling or rising edges
reg<799:795>	ACMP0 IN voltage select	00000: 50 mV 00001: 100 mV 00010: 150 mV 00011: 200 mV 00100: 250 mV 00101: 300 mV 00110: 350 mV 00111: 400 mV 01000: 450 mV 01001: 500 mV 01010: 550 mV 01011: 600 mV 01100: 650 mV 01101: 700 mV 01110: 750 mV 01111: 800 mV 10000: 850 mV 10001: 900 mV 10010: 950 mV 10011: 1 V 10100: 1.05 V 10101: 1.1 V 10110: 1.15 V 10111: 1.2 V 11000: $V_{DD}/3$ 11001: $V_{DD}/4$ 11010: EXT_VREF(PIN12) 11011: EXT_VREF(PIN7)
reg<801:800>	ACMP0 hysteresis Enable	00: Disabled (0 mV) 01: Enabled (25 mV) 10: Enabled (50 mV) 11: Enabled (200 mV)
reg<803:802>	ACMP0 positive Input divider	00: 1.0X 01: 0.5X 10: 0.33X 11: 0.25X
reg<804>	ACMP0 low bandwidth (Max: 1 MHz) enable.	0: off 1: on
reg<805>	ACMP0 positive input source select V_{DD}	0: Disabled 1: Enabled
reg<810:806>	ACMP1 IN voltage select	00000: 50 mV 00001: 100 mV 00010: 150 mV 00011: 200 mV 00100: 250 mV 00101: 300 mV 00110: 350 mV 00111: 400 mV 01000: 450 mV 01001: 500 mV 01010: 550 mV 01011: 600 mV 01100: 650 mV 01101: 700 mV 01110: 750 mV 01111: 800 mV 10000: 850 mV 10001: 900 mV 10010: 950 mV 10011: 1 V 10100: 1.05 V 10101: 1.1 V 10110: 1.15 V 10111: 1.2 V 11000: $V_{DD}/3$ 11001: $V_{DD}/4$ 11010: EXT_VREF(PIN12) 11011: EXT_VREF(PIN12)

© 2023 Renesas Electronics Corporation

Downloaded from Arrow.com.

Register Bit Address	Signal Function	Register Bit Definition
reg<812:811>	ACMP1 hysteresis Enable	00: Disabled (0 mV) 01: Enabled (25 mV) 10: Enabled (50 mV) 11: Enabled (200 mV)
reg<814:813>	ACMP1 positive Input divider	00: 1.0X 01: 0.5X 10: 0.33X 11: 0.25X
reg<815>	Reserved	must be set to 0
reg<816>	ACMP1 low bandwidth (typ: Max.1 Mhz) enable.	0: off 1: on
reg<817>	ACMP1 positive input source select PIN6	0: Disabled 1: Enabled
reg<822:818>	ACMP2 IN voltage select	00000: 50 mV 00001: 100 mV 00010: 150 mV 00011: 200 mV 00100: 250 mV 00101: 300 mV 00110: 350 mV 00111: 400 mV 01000: 450 mV 01001: 500 mV 01010: 550 mV 01011: 600 mV 01100: 650 mV 01101: 700 mV 01110: 750 mV 01111: 800 mV 10000: 850 mV 10001: 900 mV 10010: 950 mV 10011: 1 V 10100: 1.05 V 10101: 1.1 V 10110: 1.15 V 10111: 1.2 V 11000: $V_{DD}/3$ 11001: $V_{DD}/4$ 11010: EXT_VREF(PIN12) 11011: EXT_VREF(PIN14)
reg<824:823>	ACMP2 hysteresis Enable	00: Disabled (0 mV) 01: Enabled (25 mV) 10: Enabled (50 mV) 11: Enabled (200 mV)
reg<826:825>	ACMP2 positive Input divider	00: 1.0X 01: 0.5X 10: 0.33X 11: 0.25X
reg<827>	ACMP2 low bandwidth (Max: 1 MHz) enable.	0: off 1: on
reg<828>	ACMP2 positive input source select PIN6 and PIN13	0: Disabled 1: Enabled
reg<830:829>	PIN2 mode control	00: Digital Input without Schmitt Trigger 01: Digital Input with Schmitt Trigger 10: Low Voltage Digital Input 11: Reserved
reg<832:831>	PIN2 pull down resistor value selection	00: Floating 01: 10K 10: 100K 11: 1M
reg<834:833>	PIN3 mode control (sig_pin3_oe =0)	00: Digital Input without Schmitt Trigger 01: Digital Input with Schmitt Trigger 10: Low Voltage Digital Input 11: Reserved

Downloaded from Arrow.com.

Register Bit Address	Signal Function	Register Bit Definition
reg<836:835>	PIN3 mode control (sig_pin3_oe =1)	00: Push Pull 1X 01: Push Pull 2X 10: Open Drain NMOS 1X 11: Open Drain NMOS 2X
reg<838:837>	PIN3 pull up/down resistor value selection	00: Floating 01: 10K 10: 100K 11: 1M
reg<839>	PIN3 pull up/down resistor enable	0: pull down resistor enable 1: pull up resistor enable
reg<842:840>	PIN4 mode control	000: Digital Input without Schmitt Trigger 001: Digital Input with Schmitt Trigger 010: Low Voltage Digital Input 011: Reserved 100: Push Pull 101: Open Drain NMOS 110: Open Drain PMOS 111: Open Drain NMOS
reg<844:843>	PIN4 pull up/down resistor value selection	00: Floating 01: 10K 10: 100K 11: 1M
reg<845>	PIN4 pull up/down resistor select	0: pull down resistor enable 1: pull up resistor enable
reg<846>	PIN4 driver strength selection	0: 1X 1: 2X
reg<848:847>	PIN5 mode control (sig_pin5_oe =0)	00: Digital Input without Schmitt Trigger 01: Digital Input with Schmitt Trigger 10: Low Voltage Digital Input 11: Reserved
reg<850:849>	PIN5 mode control (sig_pin5_oe =1)	00: Push Pull 1X 01: Push Pull 2X 10: Open Drain NMOS 1X 11: Open Drain NMOS 2X
reg<852:851>	PIN5 pull up/down resistor value selection	00: Floating 01: 10K 10: 100K 11: 1M
reg<853>	PIN5 pull up/down resistor select	0: pull down resistor enable 1: pull up resistor enable
reg<856:854>	PIN6 mode control	000: Digital Input without Schmitt Trigger 001: Digital Input with Schmitt Trigger 010: Low Voltage Digital Input 011: Analog Input/Output 100: Push Pull 101: Open Drain NMOS 110: Open Drain PMOS 111: Analog Input & Open Drain
reg<858:857>	PIN6 pull up/down resistor value selection	00: Floating 01: 10K 10: 100K 11: 1M
reg<859>	PIN6 pull up/down resistor select	0: pull down resistor enable 1: pull up resistor enable

Downloaded from Arrow.com.

Register Bit Address	Signal Function	Register Bit Definition
reg<860>	PIN6 driver strength selection	0: 1X 1: 2X
reg<862:861>	PIN7 mode control (sig_pin7_oe =0)	00: Digital Input without Schmitt Trigger 01: Digital Input with Schmitt Trigger 10: Low Voltage Digital Input 11: Analog Input/Output
reg<864:863>	PIN7 mode control (sig_pin7_oe =1)	00: Push Pull 1X 01: Push Pull 2X 10: Open Drain NMOS 1X 11: Open Drain NMOS 2X
reg<866:865>	PIN7 pull up/down resistor value selection	00: Floating 01: 10K 10: 100K 11: 1M
reg<867>	PIN7 pull up/down resistor select	0: pull down resistor enable 1: pull up resistor enable
reg<870:868>	PIN8 mode control	000: Digital Input without Schmitt Trigger 001: Digital Input with Schmitt Trigger 010: Low Voltage Digital Input 011: Reserved 100: Push Pull 101: Open Drain NMOS 110: Open Drain PMOS 111: Open Drain NMOS
reg<872:871>	PIN8 pull up/down resistor value selection	00: Floating 01: 10K 10: 100K 11: 1M
reg<873>	PIN8 pull up/down resistor select	0: pull down resistor enable 1: pull up resistor enable
reg<874>	PIN8 driver strength selection	0: 1X 1: 2X
reg<876:875>	PIN9 mode control (sig_pin9_oe =0)	00: Digital Input without Schmitt Trigger 01: Digital Input with Schmitt Trigger 10: Low Voltage Digital Input 11: Reserved
reg<878:877>	PIN9 mode control (sig_pin9_oe =1)	00: Push Pull 1X 01: Push Pull 2X 10: Open Drain NMOS 1X 11: Open Drain NMOS 2X
reg<880:879>	PIN9 pull up/down resistor value selection	00: Floating 01: 10K 10: 100K 11: 1M
reg<881>	PIN9 pull up/down resistor select	0: pull down resistor enable 1: pull up resistor enable
reg<884:882>	PIN10 mode control	000: Digital Input without Schmitt Trigger 001: Digital Input with Schmitt Trigger 010: Low Voltage Digital Input 011: Analog Input/Output 100: Push Pull 101: Open Drain NMOS 110: Open Drain PMOS 111: Analog Input & Open Drain

© 2023 Renesas Electronics Corporation

Downloaded from Arrow.com.

Register Bit Address	Signal Function	Register Bit Definition
reg<886:885>	PIN10 pull up/down resistor value selection	00: Floating 01: 10K 10: 100K 11: 1M
reg<887>	PIN10 pull up/down resistor select	0: pull down resistor enable 1: pull up resistor enable
reg<888>	PIN10 driver strength selection	0: 1X 1: 2X
reg<889>	PIN10 super drive(4X, NMOS open drain) selection	0: super drive off 1: super drive on (if reg<884:882> = 101)
reg<892:890>	PIN12 mode control	000: Digital Input without Schmitt Trigger 001: Digital Input with Schmitt Trigger 010: Low Voltage Digital Input 011: Analog Input/Output 100: Push Pull 101: Open Drain NMOS 110: Open Drain PMOS 111: Analog Input & Open Drain
reg<894:893>	PIN12 pull up/down resistor value selection	00: Floating 01: 10K 10: 100K 11: 1M
reg<895>	PIN12 pull up/down resistor select	0: pull down resistor enable 1: pull up resistor enable
reg<896>	PIN12 driver strength selection	0: 1X 1: 2X
reg<897>	PIN12 super drive(4X, NMOS open drain) selection	0: super drive off 1: super drive on (if reg<892:890> = 101)
reg<899:898>	PIN13 mode control (sig_pin13_oe =0)	00: Digital Input without Schmitt Trigger 01: Digital Input with Schmitt Trigger 10: Low Voltage Digital Input 11: Analog Input/Output
reg<901:900>	PIN13 mode control (sig_pin13_oe =1)	00: Push Pull 1X 01: Push Pull 2X 10: Open Drain NMOS 1X 11: Open Drain NMOS 2X
reg<903:902>	PIN13 pull up/down resistor value selection	00: Floating 01: 10K 10: 100K 11: 1M
reg<904>	PIN13 pull up/down resistor select	0: pull down resistor enable 1: pull up resistor enable
reg<906:905>	PIN14 mode control (sig_pin14_oe =0)	00: Digital Input without Schmitt Trigger 01: Digital Input with Schmitt Trigger 10: Low Voltage Digital Input 11: Analog Input/Output
reg<908:907>	PIN14 mode control (sig_pin14_oe =1)	00: Push Pull 1X 01: Push Pull 2X 10: Open Drain NMOS 1X 11: Open Drain NMOS 2X
reg<910:909>	PIN14 pull up/down resistor value selection	00: Floating 01: 10K 10: 100K 11: 1M

© 2023 Renesas Electronics Corporation

Downloaded from Arrow.com.

Register Bit Address	Signal Function	Register Bit Definition
reg<911>	PIN14 pull up/down resistor select	0: pull down resistor enable 1: pull up resistor enable
reg<914:912>	PIN15 mode control	000: Digital Input without Schmitt Trigger 001: Digital Input with Schmitt Trigger 010: Low Voltage Digital Input 011: Analog Input/Output 100: Push Pull 101: Open Drain NMOS 110: Open Drain PMOS 111: Analog Input & Open Drain
reg<916:915>	PIN15 pull up/down resistor value selection	00: Floating 01: 10K 10: 100K 11: 1M
reg<917>	PIN15 pull up/down resistor select	0: pull down resistor enable 1: pull up resistor enable
reg<918>	PIN15 driver strength selection	0: 1X 1: 2X
reg<920:919>	PIN16 mode control (sig_pin16_oe =0)	00: Digital Input without Schmitt Trigger 01: Digital Input with Schmitt Trigger 10: Low Voltage Digital Input 11: Reserved
reg<922:921>	PIN16 mode control (sig_pin16_oe =1)	00: Push Pull 1X 01: Push Pull 2X 10: Open Drain NMOS 1X 11: Open Drain NMOS 2X
reg<924:923>	PIN16 pull up/down resistor value selection	00: Floating 01: 10K 10: 100K 11: 1M
reg<925>	PIN16 pull up/down resistor select	0: pull down resistor enable 1: pull up resistor enable
reg<928:926>	PIN17 mode control	000: Digital Input without Schmitt Trigger 001: Digital Input with Schmitt Trigger 010: Low Voltage Digital Input 011: Reserved 100: Push Pull 101: Open Drain NMOS 110: Open Drain PMOS 111: Open Drain NMOS
reg<930:929>	PIN17 pull up/down resistor value selection	00: Floating 01: 10K 10: 100K 11: 1M
reg<931>	PIN17 pull up/down resistor select	0: pull down resistor enable 1: pull up resistor enable
reg<932>	PIN17 driver strength selection	0: 1X 1: 2X
reg<934:933>	PIN18 mode control (sig_pin18_oe =0)	00: Digital Input without Schmitt Trigger 01: Digital Input with Schmitt Trigger 10: Low Voltage Digital Input 11: Analog Input/Output

Downloaded from Arrow.com.

Register Bit Address	Signal Function	Register Bit Definition
reg<936:935>	PIN18 mode control (sig_pin18_oe =1)	00: Push Pull 1X 01: Push Pull 2X 10: Open Drain NMOS 1X 11: Open Drain NMOS 2X
reg<938:937>	PIN18 pull up/down resistor value selection	00: Floating 01: 10K 10: 100K 11: 1M
reg<939>	PIN18 pull up/down resistor select	0: pull down resistor enable 1: pull up resistor enable
reg<941:940>	PIN19 mode control (sig_pin19_oe =0)	00: Digital Input without Schmitt Trigger 01: Digital Input with Schmitt Trigger 10: Low Voltage Digital Input 11: Analog Input/Output
reg<943:942>	PIN19 mode control (sig_pin19_oe =1)	00: Push Pull 1X 01: Push Pull 2X 10: Open Drain NMOS 1X 11: Open Drain NMOS 2X
reg<945:944>	PIN19 pull up/down resistor value selection	00: Floating 01: 10K 10: 100K 11: 1M
reg<946>	PIN19 pull up/down resistor select	0: pull down resistor enable 1: pull up resistor enable
reg<949:947>	PIN20 mode control	000: Digital Input without Schmitt Trigger 001: Digital Input with Schmitt Trigger 010: Low Voltage Digital Input 011: Reserved 100: Push Pull 101: Open Drain NMOS 110: Open Drain PMOS 111: Open Drain NMOS
reg<951:950>	PIN20 pull up/down resistor value selection	00: Floating 01: 10K 10: 100K 11: 1M
reg<952>	PIN20 pull up/down resistor select	0: pull down resistor enable 1: pull up resistor enable
reg<953>	PIN20 driver strength selection	0: 1X 1: 2X
reg<961:954>	LUT3_9 data	
reg<962>	Filter_1 output polarity select	0: Filter_1 output 1: Filter_1 output inverted
reg<963>	LUT3_8 or pipe delay output select	0: LUT3_8 1: 1pipe delay output
reg<964>	Pipe delay OUT1 polarity select bit	0: non-inverted 1: inverted
reg<966:965>	Delay value select for programmable delay & edge detector (V_{DD} = 3.3 V, typical condition)	00: 125 ns 01: 250 ns 10: 375 ns 11: 500 ns

Downloaded from Arrow.com.

Register Bit Address	Signal Function	Register Bit Definition
reg<968:967>	Select the edge mode of programmable delay & edge detector	00: rising edge detector 01: falling edge detector 10: both edge detector 11: both edge delay
reg<969>	Select edge detector output mode	0: edge detector output 1: delayed edge detector output
reg<977:970>	8-bit pattern id	
reg<978>	GPIO quick charge enable	0: Disable 1: Enable
reg<979>	NVM data read disable	0: Disable (program data can be read) 1: Enable (Program data cannot be read)
reg<980>	NVM power down	0: None (or programming enable) 1: Power Down (or programming disable)
reg<981>	Force bandgap on	0: Auto-mode 1: Enable
reg<982>	VREF1 Output Active Buffer Control	0: Disabled (bypass Active Buffer) 1: Enabled
reg<983>	VREF2 Output Active Buffer Control	0: Disabled (bypass Active Buffer) 1: Enabled
reg<991:984>	Reserved	
reg<994:992>	VREF1 Output Source Select	000: ACMP0 reference voltage 001: ACMP1 reference voltage 100: $V_{DD}/2$ 101: $V_{DD}/3$ 110: $V_{DD}/4$ 111: Hi-Z
reg<997:995>	VREF2 Output Source Select	000: ACMP2 reference voltage 001: ACMP3 reference voltage 100: $V_{DD}/2$ 101: $V_{DD}/3$ 110: $V_{DD}/4$ 111: Hi-Z
reg<998>	Power Divider Power	0: Power down 1: Power On
reg<999>	POR Auto Power detect	0: Enable 1: Disable
reg<1000>	Charge pump for analog macrocell enable (when V_{DD} <=2.7 V turn on)	0: Disable (automatic on/off control) 1: Enable (always on)
reg<1002:1001>	Reserved	
reg<1007:1003>	Reserved	
reg<1013:1008>	Reserved	
Reg<1015:1014>	Reserved	
reg<1023:1016>	Reserved	

Downloaded from Arrow.com.

21.0 Package Top Marking System Definition

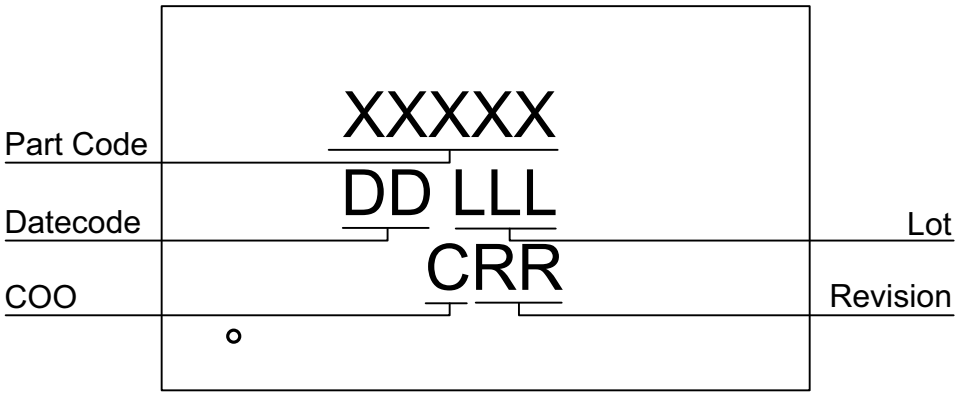

XXXXX – Part ID Field: identifies the specific device configuration
DD – Date Code Field: Coded date of manufacture
LLL – Lot Code: Designates Lot #
C – Assembly Site/COO: Specifies Assembly Site/Country of Origin
RR – Revision Code: Device Revision

Downloaded from Arrow.com.

22.0 Package Drawing and Dimensions

STQFN 20L 2x3 mm 0.4P COL Package
JEDEC MO-220, Variation WECE
IC Net Weight: 0.015 g

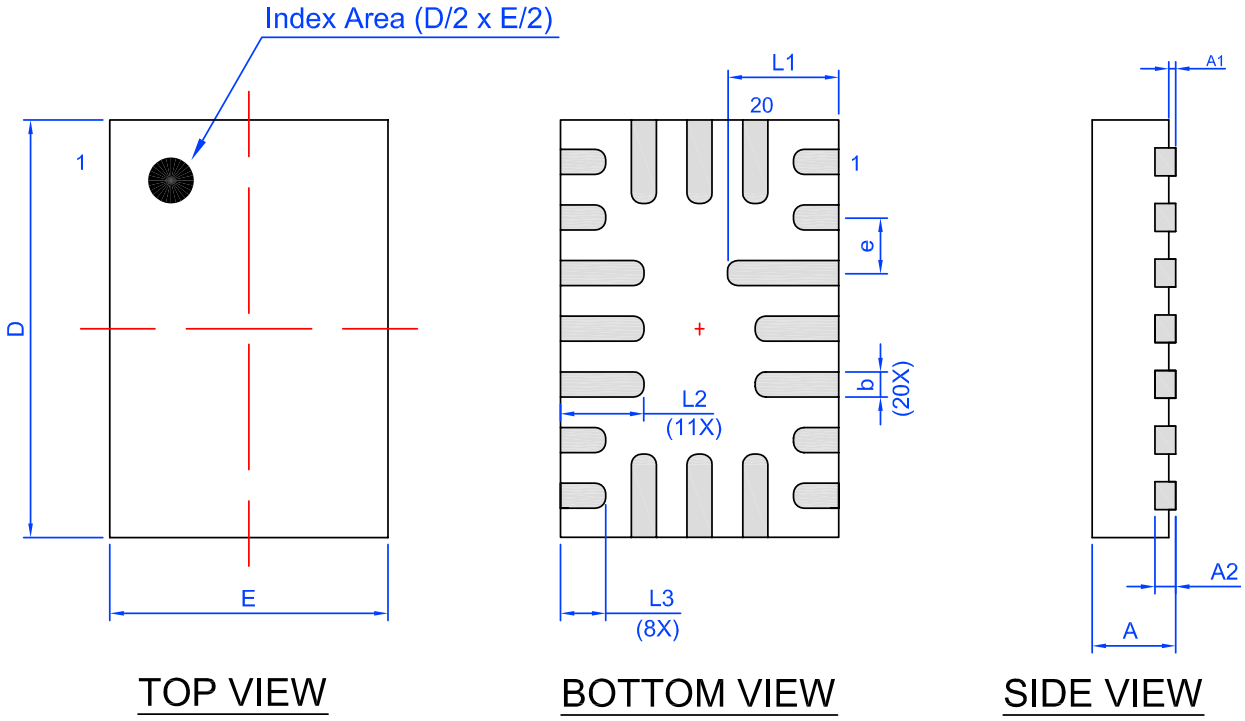

Unit: mm

Symbol	Min	Nom.	Max	Symbol	Min	Nom.	Max
A	0.50	0.55	0.60	D	2.95	3.00	3.05
A1	0.005	-	0.050	E	1.95	2.00	2.05
A2	0.10	0.15	0.20	L1	0.75	0.80	0.85
b	0.13	0.18	0.23	L2	0.55	0.60	0.65
e	0.40 BSC			L3	0.275	0.325	0.375

Downloaded from Arrow.com.

23.0 Tape and Reel Specifications

Package Type	# of Pins	Nominal Package Size [mm]	Max Units		Reel & Hub Size [mm]	Leader (min)		Trailer (min)		Tape Width [mm]	Part Pitch [mm]
			per Reel	per Box		Pockets	Length [mm]	Pockets	Length [mm]		
STQFN 20L 2x3 mm 0.4P COL	20	2 x 3 x 0.55	3,000	3,000	178 / 60	100	400	100	400	8	4

23.1 Carrier Tape Drawing and Dimensions

Package Type	Pocket BTM Length	Pocket BTM Width	Pocket Depth	Index Hole Pitch	Pocket Pitch	Index Hole Diameter	Index Hole to Tape Edge	Index Hole to Pocket Center	Tape Width
	A0	B0	K0	P0	P1	D0	E	F	W
STQFN 20L 2x3 mm 0.4P COL	2.2	3.15	0.76	4	4	1.5	1.75	3.5	8

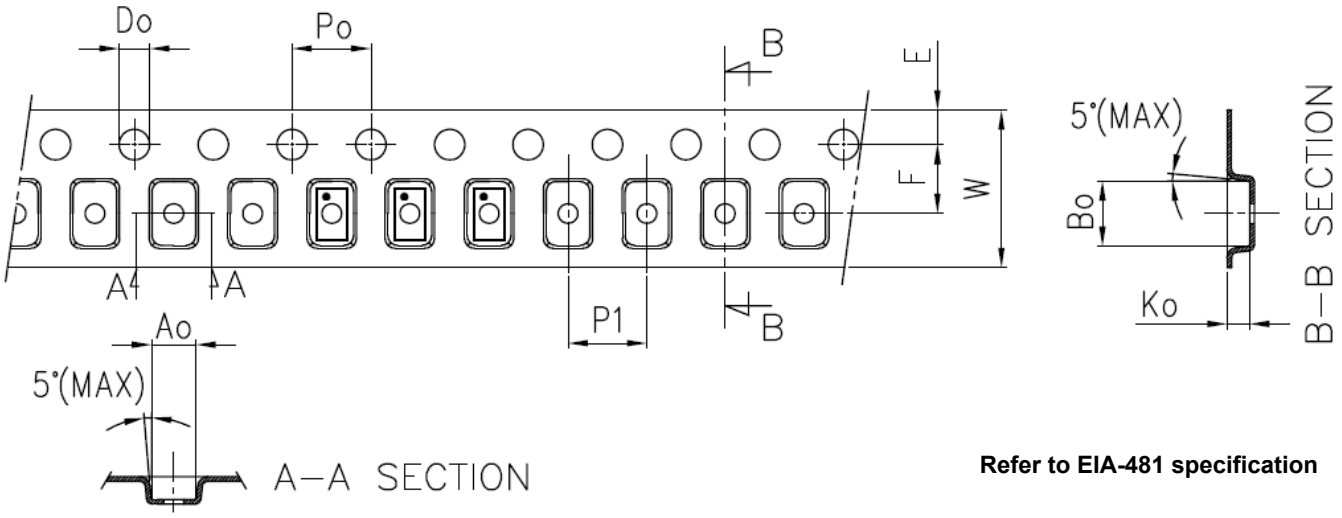

Refer to EIA-481 specification

Downloaded from Arrow.com.

24.0 Recommended Land Pattern

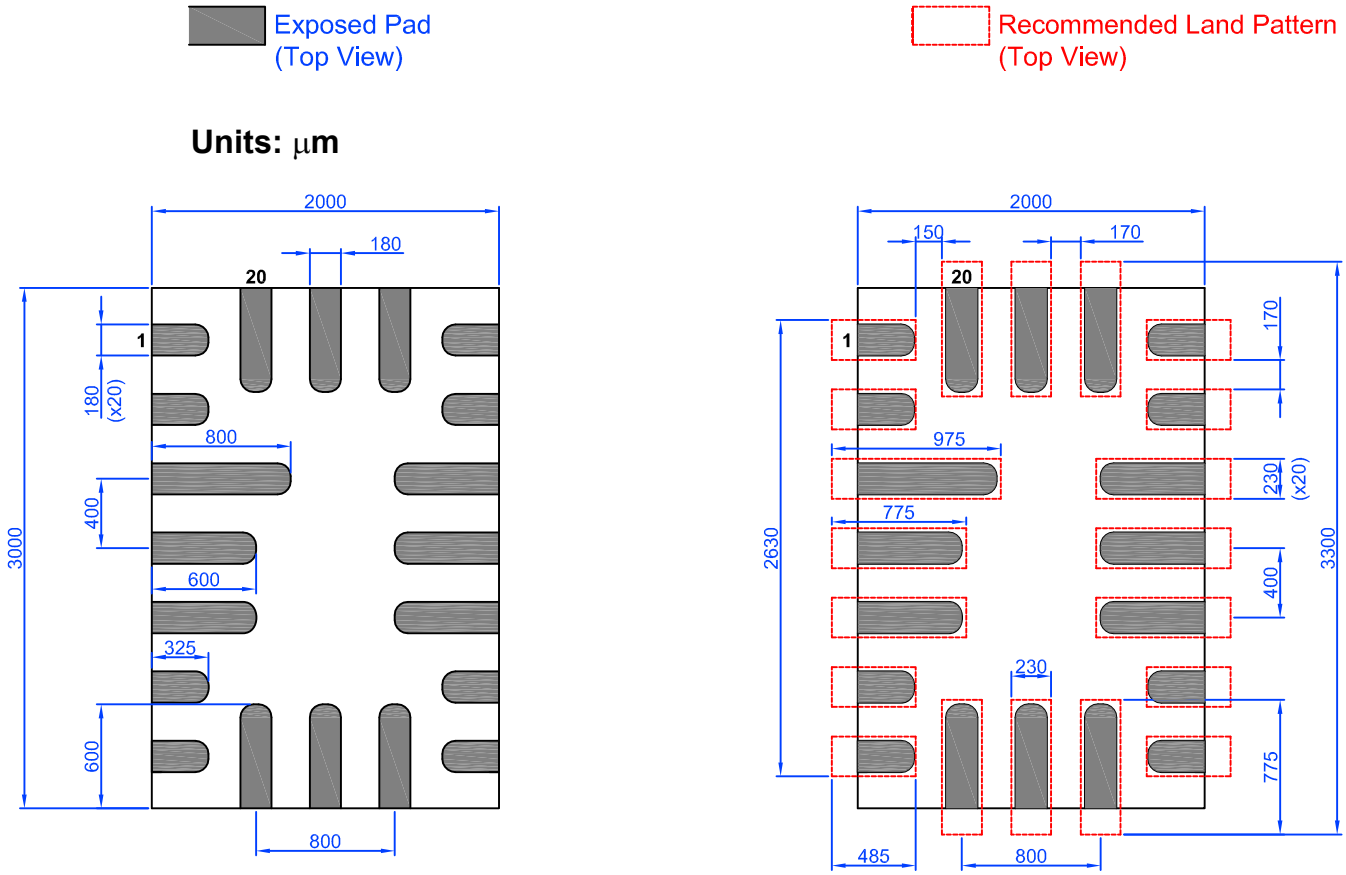

25.0 Recommended Reflow Soldering Profile

Please see IPC/JEDEC J-STD-020: latest revision for reflow profile based on package volume of 3.30 mm^3 (nominal). More information can be found at www.jedec.org.

Downloaded from Arrow.com.

26.0 Revision History

Date	Version	Change
8/15/2023	1.22	Updated tables Electrical Characteristics Fixed typos
3/10/2023	1.21	Added notes to section Ordering Information
3/4/2022	1.20	Added R_{PUP} and R_{PDWN} in section Electrical Specifications Renesas rebranding
11/16/2021	1.19	Updated tables CNT/DLY Register Settings Corrected registers [684:677], [700:693], [730:717], [750:737], [764:757], [778:771], [792:785] in Appendix A - SLG46721 Register Definition Added note for CNTs Corrected registers [792:782], [778:768], [764:754], [750:734], [730:714], [700:690], [684:674]
10/29/2019	1.18	Updated disclaimer
4/22/2019	1.17	Fixed typos
4/16/2019	1.16	Updated Chip Quiescent Value
11/13/2018	1.15	Updated to Dialog style
12/5/2017	1.14	Fixed typos
10/10/2017	1.13	Updated Electrical Spec Fixed typos
7/5/2017	1.12	Fixed typos Removed references to GPAK families Updated Silego Website & Support Updated Section Programmable Delay / Edge Detector Updated Electrical Spec
5/30/2016	1.11	Updated Silego Website & Support Updated Programmable Delay information Added PON_{THR} and $POFF_{THR}$ in Electrical Spec
10/28/2015	1.10	Updated Absolute maximum conditions
6/16/2015	1.09	Fixed DFF Polarity Operations Diagram
4/9/2015	1.08	Updated Tsu condition and value
2/9/2015	1.07	Updated ACMP section
1/21/2015	1.06	Updated Chip Quiescent values
12/3/2014	1.05	Updated Electrical Characteristics VIH/VIL/VOH/VOL values
8/29/2014	1.04	Added Emulator Reset description for Pin 3. Fixed table formatting for some tables
8/06/2014	1.03	Updated Electrical Characteristics VIH/VIL/VOH/VOL values
7/29/2014	1.02	Fixed ESD information
7/7/2014	1.01	Clarified Register OE IO Structure with Super Driver diagram Fixed typos and Cleanup Added POR to Block Diagram Removed Power Supply range when using 2M internal OSC (fixed) Fixed Package Outline Drawing (removed incorrect side view)
4/15/2014	1.0	Production Release
3/18/2014	0.54	Updated block diagrams and timing diagrams for clarity Moved items from Appendix B into their respective sections and removed Appendix B
2/3/2014	0.53	Fixed typos and Cleanup
11/21/2013	0.52	Added ESD Ratings and MSL to Absolute Maximum Conditions

© 2023 Renesas Electronics Corporation

Downloaded from Arrow.com.

Date	Version	Change
11/20/2013	0.51	Updated Package Outline Drawing Updated Tape and Reel Specifications Added Recommended Land pattern
10/21/2013	0.5	Updated Electrical Specifications
10/9/2013	0.41	Updated VIH for Logic Input
10/2/2013	0.4	Updated VIH/VIL values
9/11/13	0.31	Adjusted RC OSC Block Diagram
7/17/2013	0.3	Added IO Structures
5/7/2013	0.2	Added new sections Updated Tape and Reel spec
11/14/2012	0.1	Initial release

© 2023 Renesas Electronics Corporation

Downloaded from Arrow.com.

RoHS Compliance

Renesas Electronics Corporation's suppliers certify that its products are in compliance with the requirements of Directive 2011/65/EU of the European Parliament on the restriction of the use of certain hazardous substances in electrical and electronic equipment. RoHS certificates from our suppliers are available on request.

Downloaded from Arrow.com.

IMPORTANT NOTICE AND DISCLAIMER

RENESAS ELECTRONICS CORPORATION AND ITS SUBSIDIARIES (“RENESAS”) PROVIDES TECHNICAL SPECIFICATIONS AND RELIABILITY DATA (INCLUDING DATASHEETS), DESIGN RESOURCES (INCLUDING REFERENCE DESIGNS), APPLICATION OR OTHER DESIGN ADVICE, WEB TOOLS, SAFETY INFORMATION, AND OTHER RESOURCES “AS IS” AND WITH ALL FAULTS, AND DISCLAIMS ALL WARRANTIES, EXPRESS OR IMPLIED, INCLUDING, WITHOUT LIMITATION, ANY IMPLIED WARRANTIES OF MERCHANTABILITY, FITNESS FOR A PARTICULAR PURPOSE, OR NON-INFRINGEMENT OF THIRD-PARTY INTELLECTUAL PROPERTY RIGHTS.

These resources are intended for developers who are designing with Renesas products. You are solely responsible for (1) selecting the appropriate products for your application, (2) designing, validating, and testing your application, and (3) ensuring your application meets applicable standards, and any other safety, security, or other requirements. These resources are subject to change without notice. Renesas grants you permission to use these resources only to develop an application that uses Renesas products. Other reproduction or use of these resources is strictly prohibited. No license is granted to any other Renesas intellectual property or to any third-party intellectual property. Renesas disclaims responsibility for, and you will fully indemnify Renesas and its representatives against, any claims, damages, costs, losses, or liabilities arising from your use of these resources. Renesas' products are provided only subject to Renesas' Terms and Conditions of Sale or other applicable terms agreed to in writing. No use of any Renesas resources expands or otherwise alters any applicable warranties or warranty disclaimers for these products.

(Disclaimer Rev.1.01)

Corporate Headquarters

TOYOSU FORESIA, 3-2-24 Toyosu,
Koto-ku, Tokyo 135-0061, Japan
www.renesas.com

Trademarks

Renesas and the Renesas logo are trademarks of Renesas Electronics Corporation. All trademarks and registered trademarks are the property of their respective owners.

Contact Information

For further information on a product, technology, the most up-to-date version of a document, or your nearest sales office, please visit www.renesas.com/contact-us/.

© 2026 Renesas Electronics Corporation. All rights reserved.

Downloaded from Arrow.com.