Honeywell

THE POWER OF **CONNECTED**

Sensor Evaluation Kit, SEK002

For Use with APB Series (Digital Versions Only) and MPR Series Board Mount Pressure Sensors, Honeywell HumidIcon™ Digital Humidity/Temperature Sensors, and HPM Series Particle Sensors

32333738

Issue A

Datasheet

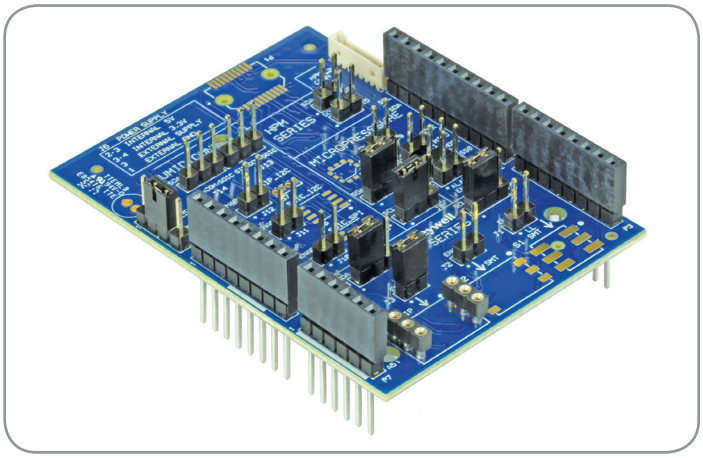

DESCRIPTION

The Sensor Evaluation Kit, SEK002, provides an easier way to demonstrate and evaluate the following Honeywell sensors:

- Basic Board Mount Pressure Sensors, ABP Series (digital versions only)
- MicroPressure Board Mount Pressure Sensors, MPR Series
- Honeywell HumidIcon™ Digital Humidity/Temperature Sensors: HIH6000 Series, HIH6100 Series, HIH7000 Series, HIH8000 Series, HIH9000 Series
- Particle Sensors, HPM Series

The kit interfaces a selected sensor to an Arduino™ Uno Rev3 Microcontroller Board. Honeywell software, which is provided free and is downloadable at **http://sensing.honeywell.com/sensors/evaluation-kit**, controls the Arduino Uno Rev3 to take readings from the sensor. Sensor measurements are displayed on the user's PC and can be recorded to a .csv file for further analysis. Sensors may be mounted directly on the SEK002 or remotely connected to the SEK002 via wire leads, allowing the sensor to be tested in adverse environments, or in a prototype product for proof of concept testing.

VALUE TO CUSTOMERS

- Quicker, easier sensor evaluation: The SEK002 and associated Honeywell software simplify sensor evaluation and demonstration by eliminating the need for the customer to develop any code before seeing sensor measurements.
- Remote mounting: In addition to being mounted on the SEK002, the sensor may also be mounted remotely if, for example, it is to be mounted in an oven for testing or in a prototype product for proof-of-concept testing of the customer's end product.
- Cost-effective: Provides a cost-effective way learn about the capabilities of our sensors so customers can make better informed component decisions faster. Customers are then able to perform a thorough evaluation of the sensor without needing to develop additional code.
- Expedites development: As the SEK002 allows customers to test their product, this helps customers to expedite their development process.

FEATURES

- The SEK002 has sockets and solder pads to receive the compatible sensors. The board is then plugged in as a shield board to the user-provided Arduino Uno Rev3 board. (All sensors are sold separately. Only one sensor may be evaluated at a time.)
- Jumpers allow the user to select the sensor to be used, supply voltage and interface (I^2C, UART or SPI).
- Uses an industry standard Arduino platform.
- Another Sensor Evaluation Kit (SEK001) is available for use with the TruStability™ HSC, SSC and RSC Series board mount pressure sensors. Sensor evaluation kits for other Honeywell sensors are in development.

POTENTIAL APPLICATIONS

- Sensor demonstration
- Sensor testing and evaluation
- Proof-of-concept testing

Downloaded from Arrow.com.

Sensor Evaluation Kit, SEK002

Table 1. Sensor Evaluation Kit Contents and User-Provided Items[1]

Honeywell Sensor Evalution Kit, SEK002	User-Provided Components
Includes: • Sensor Evaluation Board • Jumpers for the ABP Series ABPDLNN100MG2A5 preconfigured on the board 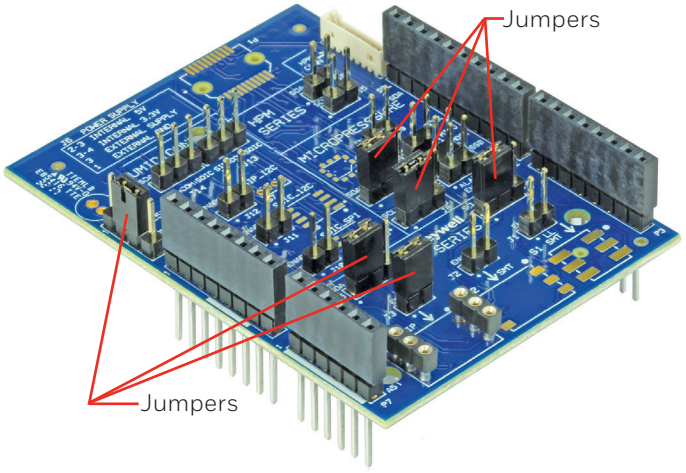	Arduino Uno Rev3 Microcontroller Board (A000066) 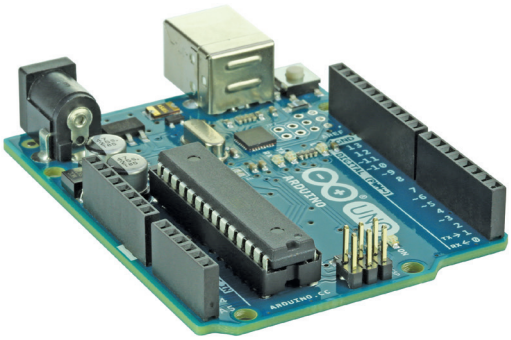 USB Interface Cable (Type A Male to Type B Male)  Jumper Wires (for use with remote connections) 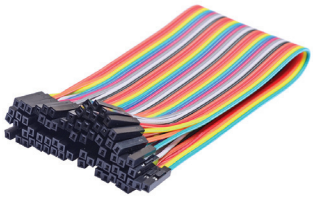 PC with Internet access *(Note: If using a docking station computer, ensure that the computer is not in its docking station when installing and running the software.)* 

[1]The Honeywell sensor is not included with the SEK002. The user must purchase the sensor separately.

Downloaded from Arrow.com.

Sensor Evaluation Kit, SEK002

Table 2. SEK002 Compatible Sensors

Basic Board Mount Pressure Sensors
ABP Series—High Accuracy, Compensated/Amplified

Digital output versions only

DIP, SMT, leadless SMT packages: SPI, I²C output

DIP SMT Leadless SMT

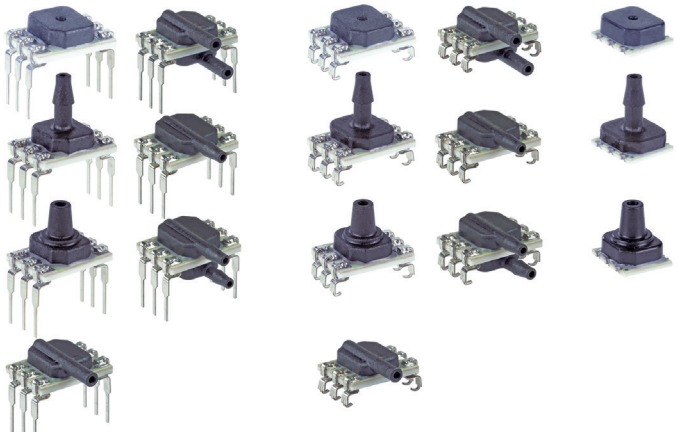

Note: Refer to the product datasheet for soldering information.

MicroPressure Board Mount Pressure Sensors
MPR Series—Compact High Accuracy, Compensated/Amplified

Leadless SMT packages: SPI, I²C

Leadless SMT mounted on breakout board

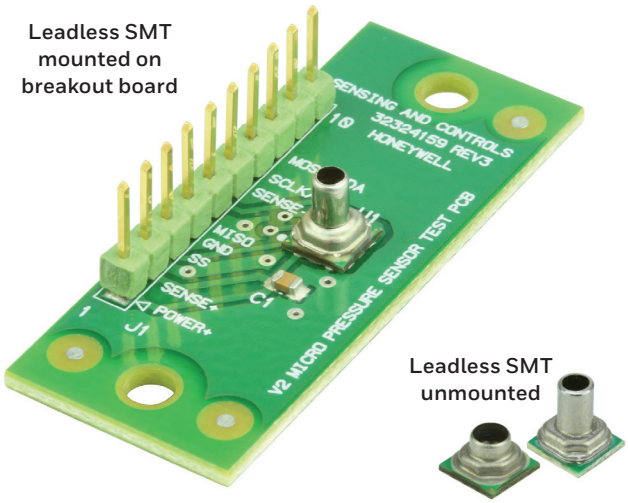

Leadless SMT unmounted

Note: See Appendix E for dimensions and more information on the breakout board. Refer to the MPR Series product datasheet for unmounted product soldering information.

Honeywell HumidIcon Digital Humidity/Temperature Sensors
HIH6100 Series, HIH6000 Series, HIH7000 Series, HIH8000 Series, HIH9000 Series

SOIC-8 packages: SPI, I²C output
SIP packages: I²C output

SOIC-8

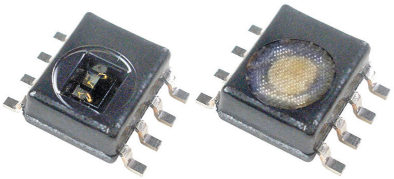

SIP

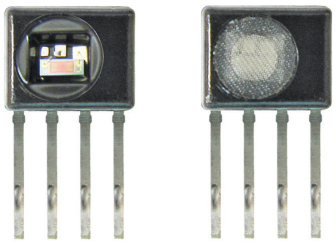

Note: Refer to the product datasheet for soldering information.

Particle Sensors
HPM Series

UART output



Note: A specialized cable (32332297-001), shown below and available separately from Honeywell, is required for use with the HPM Series. Do not use cables from other manufacturers. See Appendix F for more information.

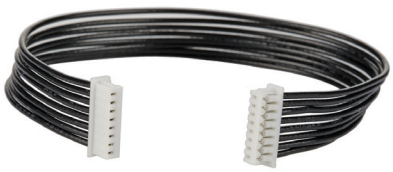

Downloaded from Arrow.com.

Table 3. SEK002 Specifications

Characteristic	Parameter
Temperature range[1]	20°C to 30°C [68°F to 86°F]
Humidity range[1]	30 %RH to 70 %RH
Power supply: internal (Arduino Uno Rev3) external	 3.3 V or 5 V 3.3 V or 5 V
Compatible sensors	ABP Series (digital versions only) MPR Series HPM Series Honeywell HumidIcon: HIH6000 Series, HIH6100 Series, HIH7000 Series, HIH8000 Series, HIH9000 Series
Associated software	Sensor Evaluation Kit SEK002 Version 1.0.exe Arduino Firmware SEK002 Version 1.0.hex XLoader.zip

Figure 1. Sensor Selection Panel Screen

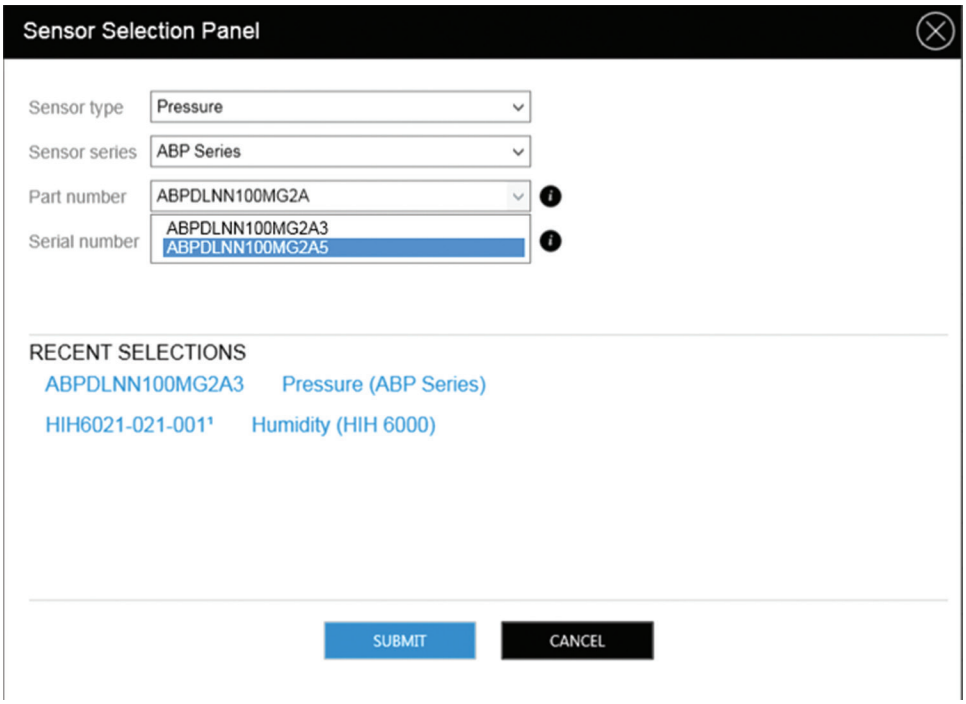

Table 4. Sensor Selection Panel Screen Functions

Function	Description
Sensor Type	Select **Sensor Type** from the drop-down menu.
Sensor Series	Select the Sensor **Series** from the drop-down menu.
Part Number	Slowly begin to enter the part number of the sensor to be evaluated until all but the last several digits appear. Then, select the final part number from the remaining drop-down list. After the part number appears, click on the SUBMIT button. *(Note: Do not enter the entire Part Number or copy/paste it into the field. The Part Number must be selected from the drop-down list.)*
Serial Number	Not used.
RECENT SELECTIONS	If applicable, a part number may be selected from this list directly. It is not necessary to enter the Sensor Type or Series first.

Downloaded from Arrow.com.

Figure 2. Measurement Screen for ABP Series Only

Note: The example given shows the display for a pressure sensor (ABP Series, MPR series). The HumidIcon products display is similar and returns the %RH (percent relative humidity) and temperature. The HPM Series Particle Sensor returns the PM2.5 in red and the PM10 in blue, both expressing concentration in µg/m³.

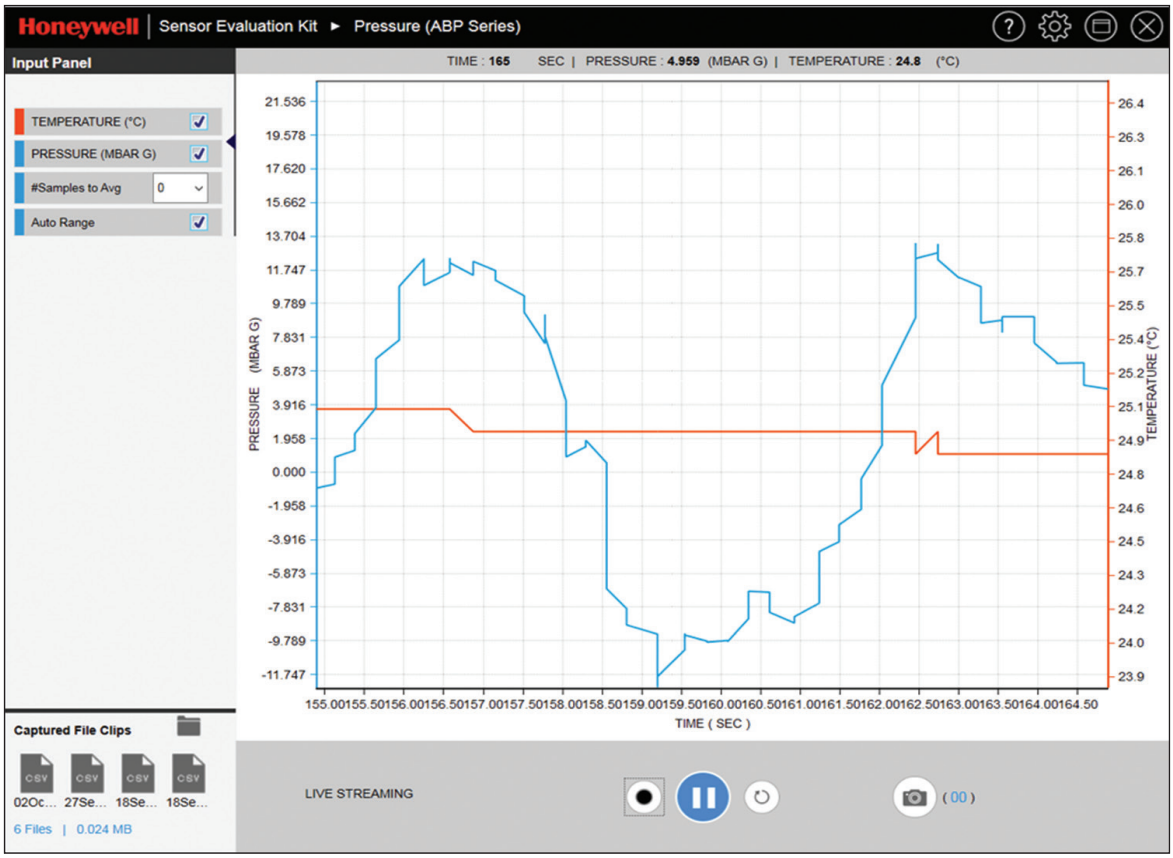

Table 5. Measurement Screen Functions for ABP Series Only

Function	Description
Input Panel: Temperature Pressure #Samples to Avg. Auto Range	Selects the desired graph parameters. Click on the "Play" button after making a selection to restart the evaluation. Displays °C or °F of the sensor's ASIC. Displays the sensor's pressure. Select from the given number. Select to automatically adjust to keep trace on screen.
Play/Pause	Starts/pauses the LIVE STREAMING function. Also used to restart an evaluation after changing any Input Panel characteristics.
Record	Records the measurements in a .cvs file in Excel for offline analysis.
Restart	Resets the time line to 0 sec.
Snap Shot	Saves a screenshot to a selected folder.
Saved Snaps Path	Opens the folder of recent file clips and snap shots.
Captured File Clips	Displays/provides access to recent .cvs files in Excel.
Part	Displays the part number of the sensor currently being evaluated.
Serial	Not displayed.

Figure 3. Captured File Clip Sample for ABP Series Only

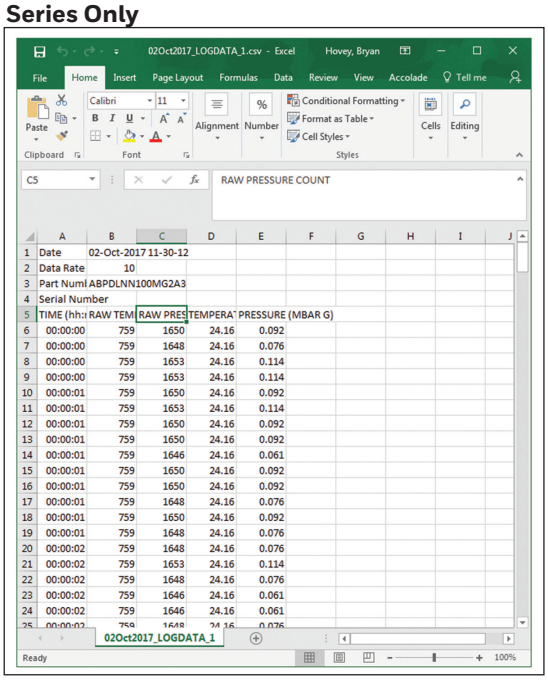

Downloaded from Arrow.com.

Figure 4. SEK002 Board Layout

Front (no jumpers shown)

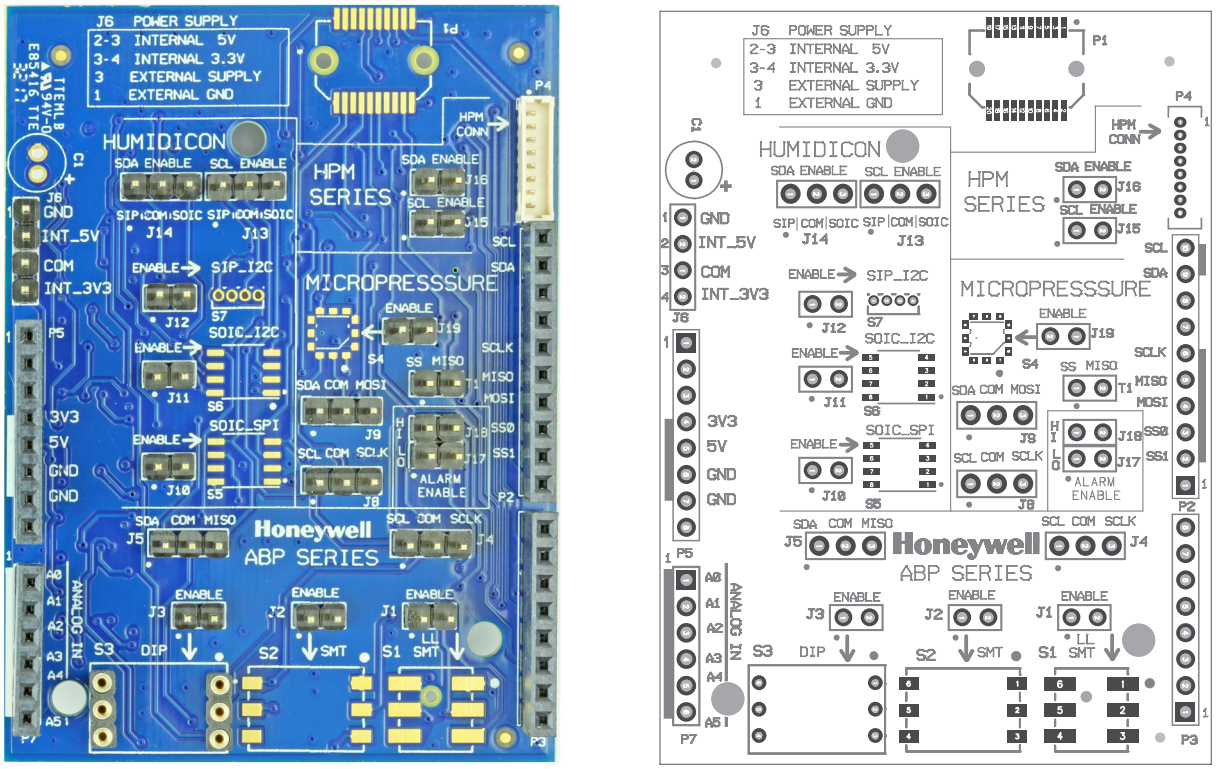

Back

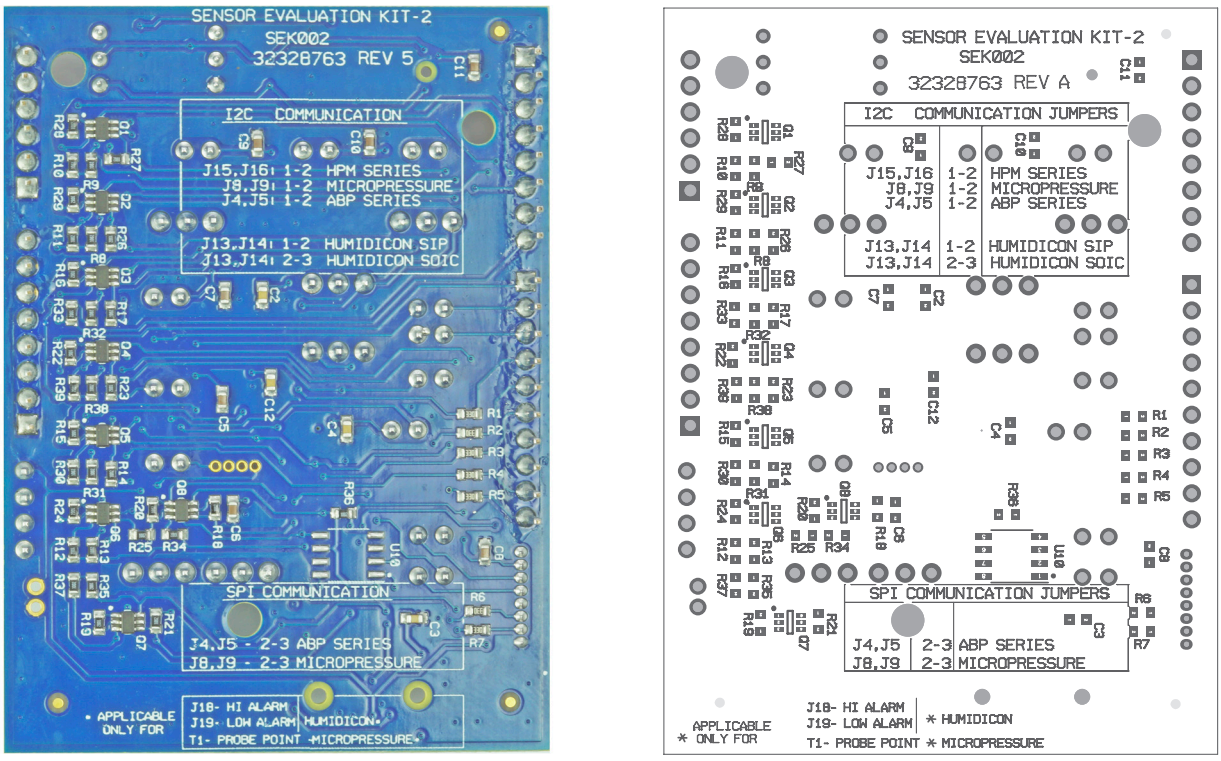

Downloaded from Arrow.com.

Figure 5. SEK002 Dimensions (For reference only: mm/[in].)

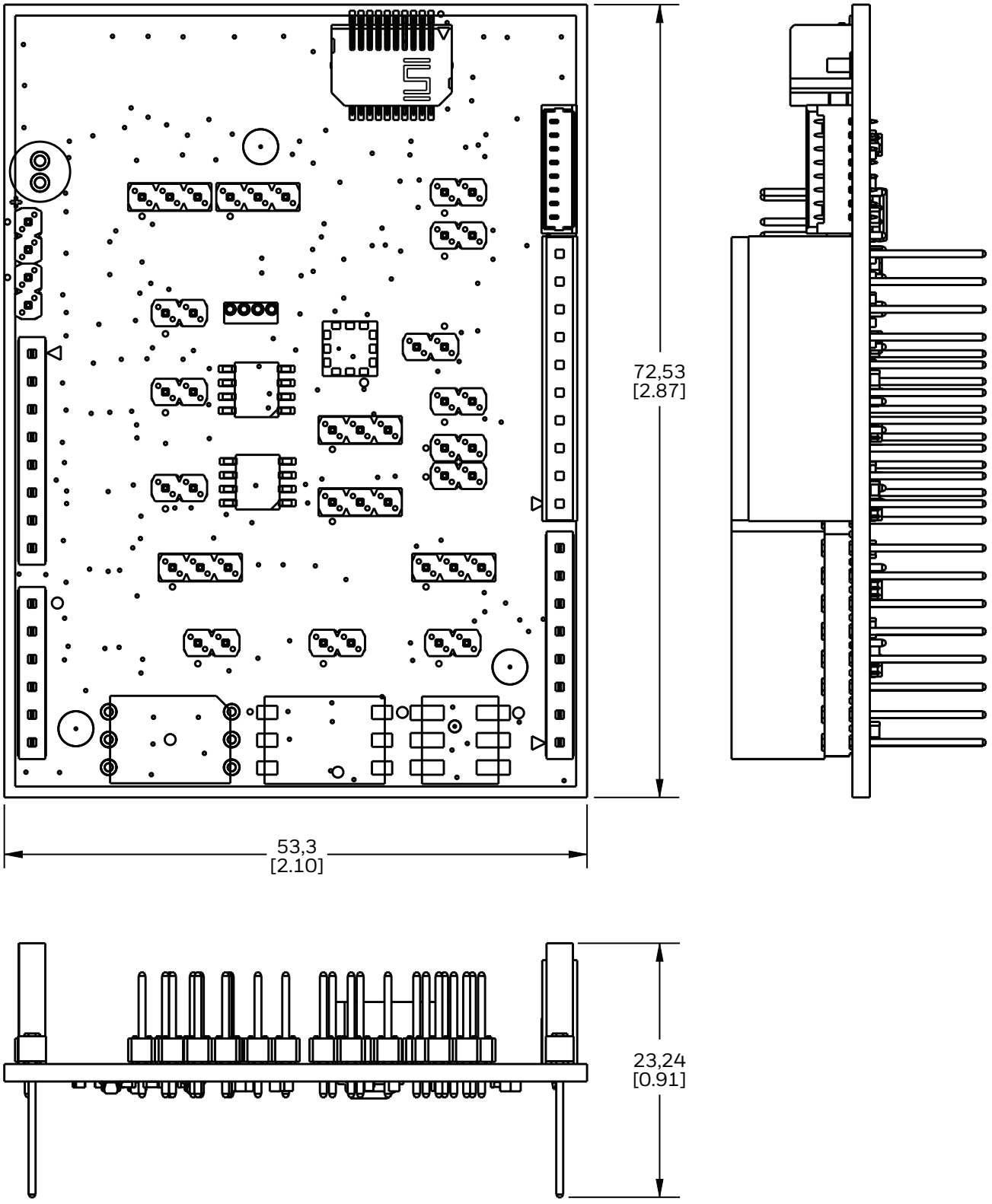

Downloaded from Arrow.com.

Figure 6. MPR Series Breakout Board Schematic and Dimensions

The MPR Series sensors are available on a breakout board, allowing power and communications lines to be more easily attached to a sensor without the risk of hand soldering or the expense of creating your own evaluation PCB. The breakout board can be used with the SEK002 Sensor Evaluation Kit and software or any I²C or SPI control circuit.

If the SEK002 is not used, please provide 1 kOhm pull up resistors on SCL and SDA lines when using I²C communications. Refer to the MPR Series data sheet for programming instructions.

Schematic

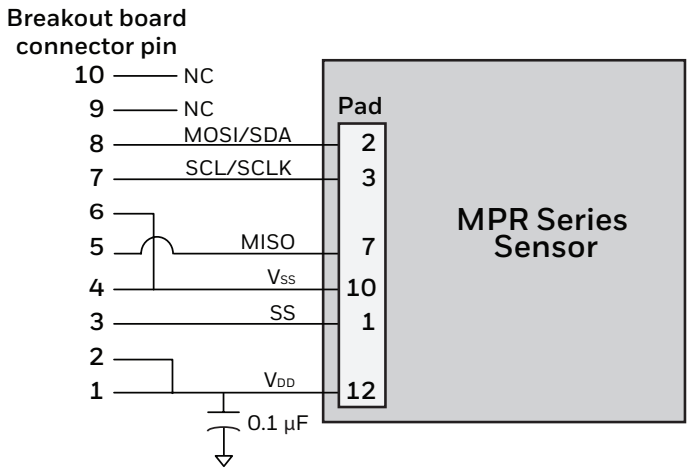

Breakout board dimensions (For reference only: mm/[in].)

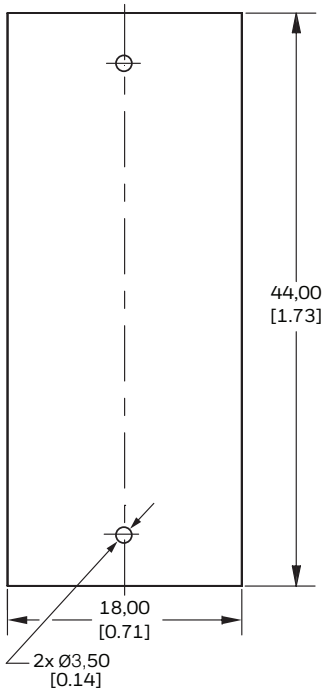

Figure 7. Cable 32332297-001 Dimensions

The 32332297-001 is a specialized cable, available separately from Honeywell, used to connect the HPM Series to the SEK002. Do not use cables from other manufacturers.

Dimensions (For reference only: mm/[in].)

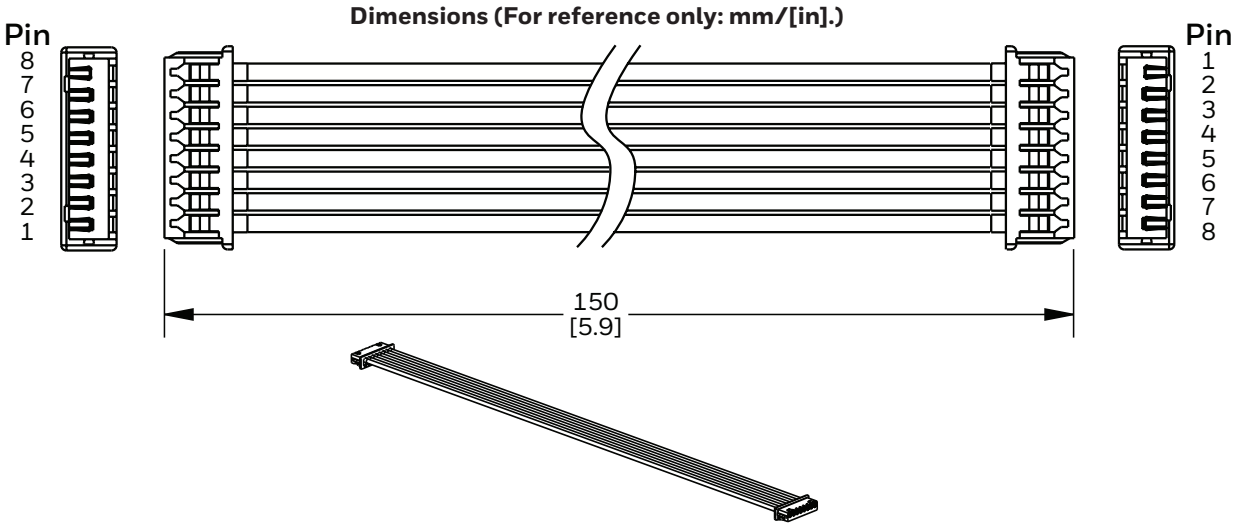

Downloaded from Arrow.com.

ADDITIONAL INFORMATION

The following associated literature is available on the Honeywell web site at sensing.honeywell.com:

- Product User Instructions

⚠ WARNING
PERSONAL INJURY

DO NOT USE these products as safety or emergency stop devices or in any other application where failure of the product could result in personal injury.

Failure to comply with these instructions could result in death or serious injury.

⚠ WARNING
MISUSE OF DOCUMENTATION

- The information presented in this datasheet is for reference only. Do not use this document as a product installation guide.
- Complete installation, operation, and maintenance information is provided in the instructions supplied with each product.

Failure to comply with these instructions could result in death or serious injury.

Warranty/Remedy

Honeywell warrants goods of its manufacture as being free of defective materials and faulty workmanship during the applicable warranty period. Honeywell's standard product warranty applies unless agreed to otherwise by Honeywell in writing; please refer to your order acknowledgment or consult your local sales office for specific warranty details. If warranted goods are returned to Honeywell during the period of coverage, Honeywell will repair or replace, at its option, without charge those items that Honeywell, in its sole discretion, finds defective. **The foregoing is buyer's sole remedy and is in lieu of all other warranties, expressed or implied, including those of merchantability and fitness for a particular purpose. In no event shall Honeywell be liable for consequential, special, or indirect damages.**

While Honeywell may provide application assistance personally, through our literature and the Honeywell web site, it is buyer's sole responsibility to determine the suitability of the product in the application.

Specifications may change without notice. The information we supply is believed to be accurate and reliable as of this writing. However, Honeywell assumes no responsibility for its use.

For more information

Honeywell Sensing and Internet of Things services its customers through a worldwide network of sales offices and distributors. For application assistance, current specifications, pricing or the nearest Authorized Distributor, visit sensing.honeywell.com or call:

Asia Pacific	+65 6355-2828
Europe	+44 (0) 1698 481481
USA/Canada	+1-800-537-6945

Honeywell Sensing and Internet of Things
9680 Old Bailes Road
Fort Mill, SC 29707
www.honeywell.com

32333738-A-EN | A | 12/17
© 2017 Honeywell International Inc.

Downloaded from Arrow.com.