Potential Transformer Instrument *EX-HX-VT Series*







Features

- Used (with 150 Volt full scale A.C. voltmeters) to measure the voltage of 240, 480 or 600 VAC systems.
- Primary insulated for 4.0 KV rms test, suitable for L.V. switchgear and motor control use.
- 50/60 Hz. operation.
- Open construction - "Type H".
- CSA certified (209651).
- The nominal line voltages of 240 and 480 volts may be exceeded by 25% for 60 Hz. operation.
- Insulation system 55 degree C rise, Class 105.

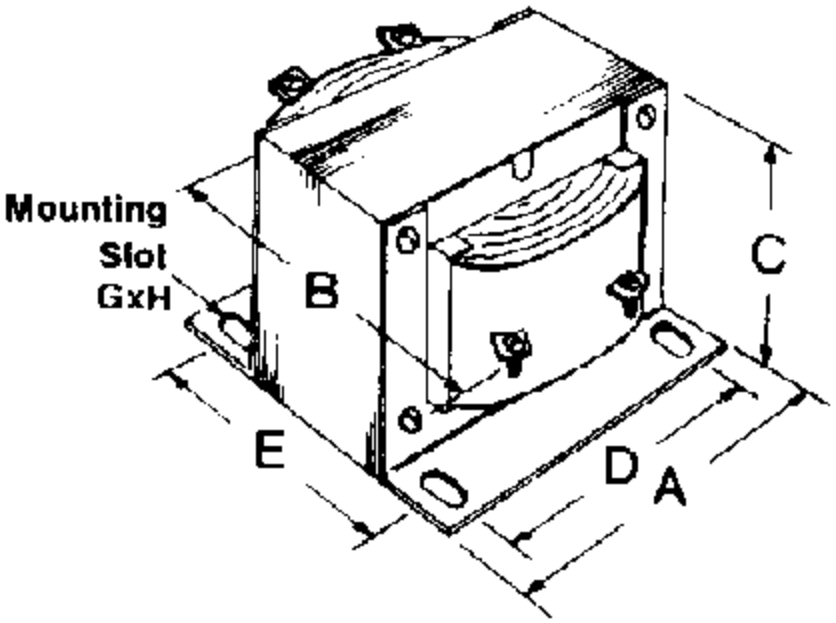

Part No.	Nominal Line Voltage	Ratio Pri. / Sec.	Accuracy %	VA	Thermal Rating	Overall Dimensions A	B	C	Mounting Centers D	E	Mounting Slot G	H	Ship Wt. Lb.
VT55A	240	240:120	1.2	0-8	50	3.00	3.25	2.56	2.50	2.50	0.22	0.44	3
HX54A	240	240:120	1.2	0-20	100	3.75	4.00	3.13	3.13	3.13	0.22	0.44	6.6
VT56A	347	347:120	1.2	0-8	50	3.00	3.25	2.56	2.50	2.50	0.22	0.44	3
VT57A	480	480:120	1.2	0-8	50	3.00	3.25	2.56	2.50	2.50	0.22	0.44	3
HX74A	480	480:120	1.2	0-20	100	3.75	4.00	3.13	3.13	3.13	0.22	0.44	6.6
VT59A	600	600:120	1.2	0-8	50	3.00	3.25	2.56	2.50	2.50	0.22	0.44	3
HX94A	600	600:120	1.2	0-20	100	3.75	4.00	3.13	3.13	3.13	0.22	0.44	6.6

Tags: **instrument transformer**, **potential**, **voltmeter**, **switchgear**, **motor control**

Data subject to change without notice.

Downloaded from Arrow.com.

© 2026. Hammond Manufacturing Ltd. All rights reserved.

Downloaded from Arrow.com.