Copying of this document and giving it to others and the use or communication of the contents thereof, are forbidden without express authority. Offenders are liable to the payment of damages. All rights are reserved in the event of the grant of a patent or the registration of the utility model or design

Weitergabe sowie Vervielfältigung dieser Unterlage, Verwertung und Mitteilung ihres Inhalts nicht gestattet, soweit nicht ausdrücklich zugestanden. Zuwiderhandlungen verpflichten zu Schadenersatz. Alle Rechte für den Fall der Patenterteilung oder Gebrauchsmuster-Eintragung vorbehalten

INDUSTRIAL@AMPHENOL
TRUSTED GLOBALLY

Panel cutout

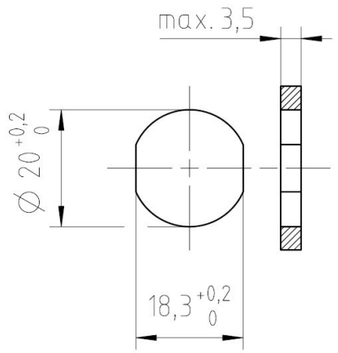

sealing area must be flat and polished

Version with ring nut

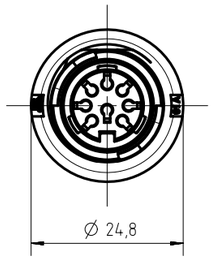

Version with hex nut

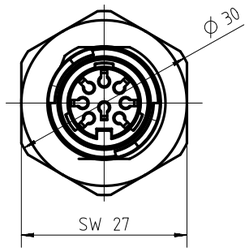

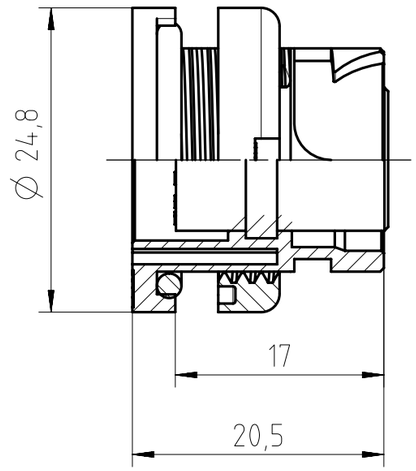

Number of contacts	Standard	3	4	5	5	6	7	7	8	12	14
Contact arrangement	IEC 61076-2-106	03-a	04-a	05-a	05-b	06-a	07-a	07-b	08-a	12-a	14-a
Rated voltage	IEC 60664-1	150 V		100 V	32 V	100 V		32 V			
Rated impulse withstand voltage	IEC 60664-1	1500 V			800 V	1500 V		800 V			
Pollution degree	IEC 60664-1	3[1]									
Installation category	IEC 60664-1	I									
Insulation group	IEC 60664-1	II, 400 ≤ CTI < 600									
Current rating	IEC 60512-5-3	10A/+40°C		7A/+40°C						3A/+40°C	
Insulation resistance	IEC 60512-3-1	>10^{10} Ohm[2]									
Contact resistance	IEC 60512-2-1	<5mOhm									
Climatic category	IEC 60668-1	40 / 100 / 21									
Temperatur range		-40°C...+100°C / -40°F...+212°F									
IP degree	IEC 60529	IP 68 (in mated condition)									
Insertion and withdrawal force	IEC 60512-13-2	25N	30N	35N	35N	50N	55N	55N	60N	50N	50N
mechanical operation	IEC 60512-9-1	≥500 mating cycles									
material housing		thermoplastic									
dielectric material		thermoplastic									
sealing material		chloroprene, silicone									
contacts		silver or gold plated, please order contacts separately acc. to drawing M-N 02 015 00XX X (3-8pol) or M-N 02 010 0158 X (12-14pol)									
termination technique		crimp									
wire gauge		0,09-1,0mm²			0,09-0,75 mm²	0,09-1,0m m²		0,09-0,75mm²			0,09-0,25mm²
flamability		UL 94 V0									
locking system		Quicklock System									

[1] designed according pollution degree 2, can be used under pollution degree 3 if the rules according IEC 60664-1 are fulfiled
[2] under operating conditions >10^8 Ohm

Do not connect or disconnect under load. Metal housing parts shall be securely incoporated to protected ground.
All technical data have been measured in a laboratory environment and can be different during pratical usage of the product. Any product informtion is for descriptive usage only and not legally binding; particulary the information does not constitute or provide any legal guaranties ("Beschaffenheitsgarantie" or " Haltbarkeitsgarantie").

Contact arrangement View on mating side	Number of contacts (Contact arrangement acc. IEC 61076-2-106)	Part number with ring nut	Part number with hex nut
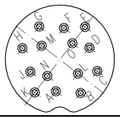	14 (14-a)	C091 11G014 000 5 U	C091 11G014 009 5 U
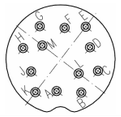	12 (12-a)	C091 11G012 000 5 U	C091 11G012 009 5 U
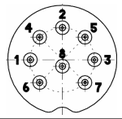	8 (08-a)	C091 11G008 000 5 U	C091 11G008 009 5 U
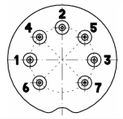	7 (07-b)	C091 11G107 000 5 U	C091 11G107 009 5 U
	7 (07-a)	C091 11G007 000 5 U	C091 11G007 009 5 U
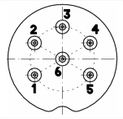	6 (06-a)	C091 11G006 000 5 U	C091 11G006 009 5 U
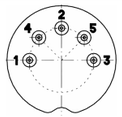	5 (05-b)	C091 11G105 000 5 U	C091 11G105 009 5 U
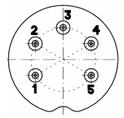	5 (05-a)	C091 11G005 000 5 U	C091 11G005 009 5 U
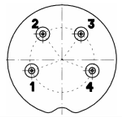	4 (04-a)	C091 11G004 000 5 U	C091 11G004 009 5 U
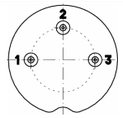	3 (03-a)	C091 11G003 000 5 U	C091 11G003 009 5 U

Gewicht (errechnet) / *Calc WT* :	Zul. Abw. / *Tolerances* : ± 0,50	DIN / ISO 13715	Maßstab / *Scale* : 2:1; 1:1 — A3
Prüfmaß / *Testdimension*			CUSTOMER DRAWING
Teileindex / *Partindexnumber:*			
Bagatelle change:			
	Gez. / Drawn: 08.01.2021 MCARLE		Gerätedose Quicklock
	Status: Released		*Female receptacle Quicklock*
	Gepr. / Checked: 08.01.2021 MBERTSCH		
01 — 201800273 — 08.01.2021 — MCARL	**Amphenol Tuchel Industrial GmbH**		M C091 11GXXX 00X 5 U — Blatt / *Sheet* 1 / 1 Bl.
Index — Änderung / *Description* — Datum / *Date* — Name			Ers. f. / *Replacement for* :

FA12021-000105
NXM-V01