OMRON

High-Coded Non-Contact Safety Door Switch
D41D

Matches with machine design. Initial setup by batch teaching is quick and easy.

- High-coded safety door switch effective in tamper protection
- Easy automatic teaching
- Fits in narrow spaces and corners inside machines
- Three types of actuators
- Complies with EN ISO 14119 (Type 4/High Coded), EN ISO 13849-1 (PLe)

* The actuator is sold separately.

Refer to *Safety Precautions* on page 20

For the most recent information on models that have been certified for safety standards, refer to your OMRON website.

The D41D is a high-coded safety door switch in which the combination of the switch and actuator is fixed by pairing with more than 1,000 variations available. You can develop applications using compact door switches while minimizing defeat possibilities.

Three types of actuators fit in narrow spaces and corners inside machinery

D41D-A1: Standard actuator
Installation example: swinging door
- Fits in narrow spaces and corners

D41D-A2: Flat actuator
Installation example: acrylic glass door
- Flat design matches the surroundings

D41D-A3: Miniature actuator
Installation example: sliding door, narrow space
- Compact size for acrylic glass doors

Easy teaching reduces commissioning time

Pairing by teaching procedure

1. Turn the power ON.

2. Move the actuator closer to the switch to start the teaching procedure. The red LED turns ON. After 10 seconds, the yellow LED gives brief cyclic flashes. Turn the power OFF. ✻

3. Turn the power ON again to complete the teaching procedure.

✻ If you repeat the teaching procedure, you need to wait for 10 minutes after brief cyclic flashes of the yellow LED.

Easy and quick teaching procedure for protection against tampering.

Space saving installation

Flat actuator
D41D-A2

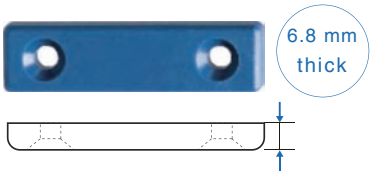

Miniature actuator
D41D-A3

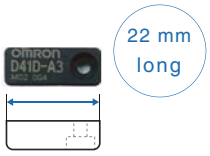

No need to worry about installation space in your machine and mismatch with the surroundings.

Watch a video that shows the easy teaching procedure and actual sizes.
https://www.fa.omron.co.jp/video-e/d41d

Downloaded from Arrow.com.

Model Number Structure

Model Number Legend

Safety Door Switch
Switch

D41D - □ C D - □ □
(1) (2) (3) (4) (5) (6)

(1) Model
D: Non-Contact

(2) Coding level / Teaching limitation
1: High (Individual coding) / Teaching is not-repeatable
2: High (Individual coding) / Teaching is repeatable

(3) Connection to controller
C: Cascade connection

(4) Diagnosis output
D: With diagnosis output (Auxiliary output)

(5) Cable length
Blank: no cable
025: 25cm

(6) Connection method
N1: M8 connecter
N2: Connecting cable with M12 connector
Note: There are only two types of switch: D41D-1CD-N1 and D41D-2CD-025N2.

Actuator

D41D - A □
(1) (2)

(1) Model
D: Non-contact

(2) Actuator type
A1: Standard actuator
A2: Flat actuator
A3: Miniature actuator

OMRON
Downloaded from Arrow.com.

Ordering Information

List of Models

Switches

Appearance	Coding level / Teaching limitation	Connection method	Cable length	Model
	High / Teaching is not-repeatable	M8 connector	---	**D41D-1CD-N1**
	High / Teaching is repeatable	Connecting cable 0.25 m long with M12 connector		**D41D-2CD-025N2**

Actuator (Sold separately)

Appearance	Name	Features	Model
	Standard actuator	• Mounting 2 x M4 • Dimensions (W x D x H) 39 x 29.5 x 18 (mm)	**D41D-A1**
	Flat actuator	• Mounting 2 x M5 (Countersunk screw) • Dimensions (W x D x H) 60 x 16 x 6.8 (mm)	**D41D-A2**
	Miniature actuator	• Mounting 1 x M3 (1.2 dia. hole, plus Twist protection) • Dimensions (W x D x H) 22 x 9 x 7 (mm)	**D41D-A3**

Accessory (Sold separately)

Connecting cables

Appearance	Name	Features	Cable length	Model
	Connecting cables with M8 Connector	Connecting cables with M8 connector (female), 8-pole – 8 x 0.25mm^2, straight, IP67	2 m	**D41D-8P5-CFM8-702M**
			5 m	**D41D-8P5-CFM8-705M**
			10 m	**D41D-8P5-CFM8-710M**
	Connecting cables with M12 Connector	Connecting cables with M12 connector (female), 8-pole – 8 x 0.25mm^2, straight, IP69	5 m	**D41L-8P5-CFM12-905M**
			10 m	**D41L-8P5-CFM12-910M**

Sealing /Mounting

Appearance	Name	Purpose	Contents	Model
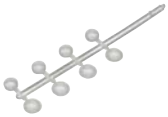	Sealing Kit	Used to seal the mounting holes	4 flat plugs and 4 plugs with rim for high screw head	**D41D-SK**
	Mounting Set	Mounting plate: Used to fix to a non-flat surface such as a profile. Ferrule plug: Used for applications with considerable changes in ambient temperature.	2 mounting plates and 4 ferrule plugs	**D41D-MS**

Downloaded from Arrow.com.

Standards Certification

Directive

- Machinery Directive
- RE Directive
- RoHS Directive
- WEEE Directive

Dispose in accordance with applicable regulations.

Standards

- EN ISO 13849-1: 2015 PL e Category 4
- EN 60947-5-3
- EN 300 330
- EN ISO 14119
- IEC 61508

UL Certification

- UL508
- CAN/CSA C22.2 No.14

Regions where D41D can be used

The product can be used in Japan, the United States, Canada, EU member states, the United Kingdom, China, Australia, and New Zealand.
The use in other countries may conflict with radio laws of the countries.

Downloaded from Arrow.com.

Ratings and Specifications

Model		D41D
Technical		
Detection method		RFID
Frequency band		125 kHz
Transmitter outputs		-6 dBm max.
Interlock type (ISO 14119)		Type 4
Coded level (ISO 14119)		High
Actuator		D41D-A1, D41D-A2, D41D-A3
Response time (ON to OFF)		100 ms max.
Risk time		200 ms max.
Startup time after power ON		2 s max.
Typical operating distance (Sn)		12 mm (lateral actuation: 9 mm)
Assured operating distance (assured operating distance, Sao) (IEC 60947-5-3) ✻1		10 mm (-10 to 60°C) 6 mm (-10 to 60°C, lateral) 8 mm (-25 to 65°C) 4 mm (-25 to 65°C, lateral)
Assured switch-off distance (assured release distance, Sar) (IEC 60947-5-3)		18 mm (lateral actuation: 15 mm)
Differential travel		<2.0 mm
Repeat accuracy (R)		<0.5 mm
Electrical		
Supply voltage (Ue)		24 VDC (-15%/+10%) (stabilized PELV-power supply)
Current consumption (Io)		35 mA
Overvoltage category		III
Pollution degree		3 (UL certification is 2)
Conditional short-circuit current		100 A
External device fuse rating		2 A max.
Safety input	**Accepted test pulse duration on input signal**	1.0 ms max.
	Test pulse interval	100 ms min.
	Current consumption per input	5 mA
Safety output (OSSD)	**Switching element**	PNP type, short-circuit proof
	Utilization category	DC-12: 24 VDC (Ue)/0.25 A (Ie) DC-13: 24 VDC (Ue)/0.25 A (Ie)
	Operating current (Ie1)	0.25 A max.
	Voltage drop (Ud)	<1 V
	Test pulse duration	1.0 ms max.
	Test pulse interval	1,000 ms
Auxiliary output	**Switching element**	PNP type, short-circuit proof
	Utilization category	DC-12:24 VDC (Ue)/0.05 A (Ie) DC-13:24 VDC (Ue) /0.05 A (Ie)
	Operating current (Ie2)	0.05 A max.
	Voltage drop (Ud)	<2 V
Switching frequency (f)		1 Hz
Rated insulation voltage (Ui)		32 VDC
Rated impulse withstand voltage (Uimp)		0.8 kV
Minimum operating current (Im)		0.5 mA
OFF-state leakage current (Ir)		<0.5 mA
Mechanical		
Fixing screws		4 × M4 (Refer to the outline drawing for the actuator)
Tightening torque of fixing screws		0.8 N·m (Refer to the outline drawing for the actuator)
Material		Thermoplastic PBT (enclosure)
Weight		Unit: <50 g, Package: <110 g

Downloaded from Arrow.com.

Model	D41D
Environmental	
Ambient operating temperature	-25 to 65°C
Ambient storage temperature (including during transportation)	-25 to 85°C
Ambient operating humidity	93% max. (non-condensing, non-icing)
Degree of protection (IEC 60529)	IP65 and IP67
Vibration resistance	10 to 55 Hz, amplitude 1.0 mm
Shock resistance	30 g/11 ms
Connection	
Series connection	31 max. ✻2
Cable lengths	100m max. (between switch and power supply)
Connection	D41D-1CD-N1: M8 connector, 8-pole, A-coded D41D-2CD-025-N2: Connecting cable 0.25 m long with M12 connector

✻1. Determine the optimum parameter for your machine.
✻2. Refer to *Connection* on page 9 for connection specifications with the Safety controller.

Safety classification information

Standard	ISO 13849-1, IEC 61508
PL	e
DC	99%
Safety Category	4
PFH	6.8×10^{-10}
PFD	1.2×10^{-4}
SIL	Suitable for SIL3 applications
Mission time	20 years

Note: 1. If multiple safety switchgears are involved in the same safety function, the PFH values of the individual components must be added.

UL

For use in NFPA 79 Applications.
Adapters providing field wiring means are available from the manufacturer.
Refer to manufacturer's information.
For use in Pollution Degree 2 Environment.

FCC

This device complies with part 15 of the FCC Rules and Industry Canada license-exempt RSS standard(s).
Operation is subject to the following two conditions:
1. This device may not cause harmful interference, and
2. this device must accept any interference received, including interference that may cause undesired operation.
This device complies with the Nerve Stimulation Exposure Limits (ISED RSS-102) for direct touch operations. Changes or modifications not expressly approved by OMRON Corporation could void the user‘s authority to operate the equipment.

Downloaded from Arrow.com.

Engineering Data (Typical Data)

Detection Range

Operating distance

The side allows for a maximum height misalignment (X) of switch and actuator of ±8 mm (e.g. mounting tolerance or due to guard door sagging).
The axial misalignment (Y) is max. ±18 mm.

Actuating curves

The actuating curves represent the typical operating distance of the safety switch during the approach of the actuator subject to the actuating direction.

Transverse misalignment

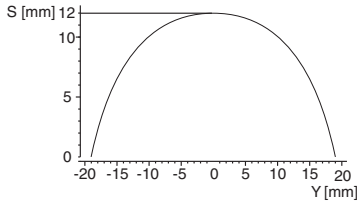

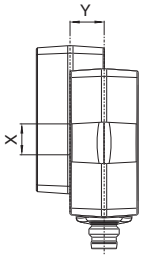

Height misalignment

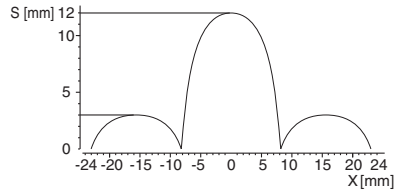

The continuous signal of the yellow LED signals the actuator detection;
the flashing of the yellow LED signals that the safety door switch is actuated in the different travel area.

Preferred actuation directions: from front or from side
In case of a lateral actuation, the operating distances are reduced by approx. 3 mm.

Recommended Adjustment

Align the safety door switch and actuator at a distance of 0.5 x assured operating distance (Sao).

The correct functionality of both safety channels must be checked by means of the connected safety controller.

Downloaded from Arrow.com.

Actuator Mounting Direction

(Unit: mm)

D41D-A1

Actuation from front

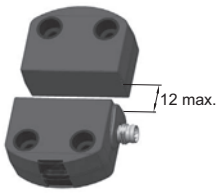

Actuation from side

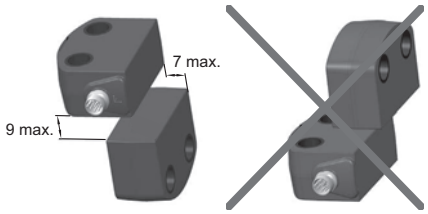

Lateral actuation only from the shown switch side.

D41D-A2

Actuation from front

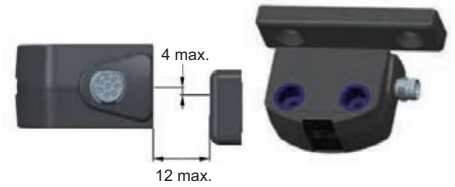

Actuation from side

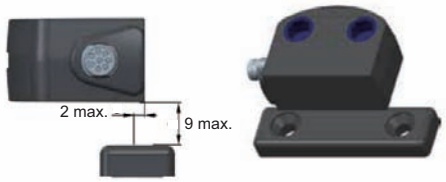

Lateral actuation only from the shown switch side.

D41D-A3

Actuation from front

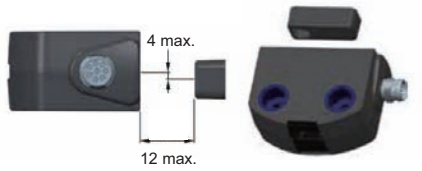

Actuation from side

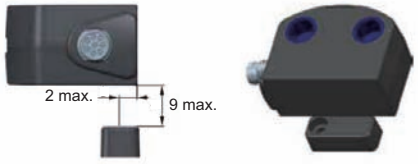

Lateral actuation only from the shown switch side.

Downloaded from Arrow.com.

Connection

Pin assignment

Function		Pin assignment	Color code of the OMRON's connector (M8/M12 connector cable) M8: D41D-8P5-CFM8-7□□M M12: D41L-8P5-CFM12-9□□M
A1	**U_e**	1	WHITE
X1	**Safety input 1**	2	BROWN
A2	**GND**	3	GREEN
Y1	**Safety output 1**	4	YELLOW
OUT	**Auxiliary output**	5	GRAY
X2	**Safety input 2**	6	PINK
Y2	**Safety output 2**	7	BLUE
IN	**without function**	8	RED

Note: 1. When using an OMRON cable, the tightening torque of the connector is 1 N•m

Wiring Examples

The application examples shown are suggestions. They however do not exempt the user from carefully checking whether the Safety door switch and its set-up are suitable for the individual application.
The power supply for the safety door switch must provide protection against permanent overvoltage.
To that effect, stabilized PELV supply units must be used. The safety outputs (OSSD) can be directly connected in the safety circuit of the control system. For applications of PL e / safety category 4 in accordance with ISO 13849-1, the safety outputs (OSSD) of the safety door switch or safety door switch of the chain must be connected to a safety controller or safety relay unit of the same Safety Category. If the safety door switch is wired to relays or to non-safety relevant control components, a new risk analysis must be carried out.
If the safety door switch is connected to the safety input of a safety controller, the controller must have a dual-channel monitoring time of at least 100 ms and the accepted test pulse duration of at least 1 ms. Also, the cross-wire-short monitoring function must be disabled.

Wiring example to connect a safety controller

When connecting multiple safety door switches in series, apply 24 VDC to safety inputs X1 and X2 on the Nth unit, as shown in the figure below.
Connect safety outputs Y1 and Y2 to safety inputs X1 and X2 of the following safety door switch.
Connect safety outputs Y1 and Y2 of the first unit to the safety controller or safety relay unit. Connect the auxiliary output to the PLC, etc.
When connecting a single safety door switch to the safety controller or safety relay unit, apply 24 VDC to safety inputs X1 and X2 in the same manner as the Nth unit shown below, and then connect safety outputs Y1 and Y2 to the safety controller or safety relay unit.

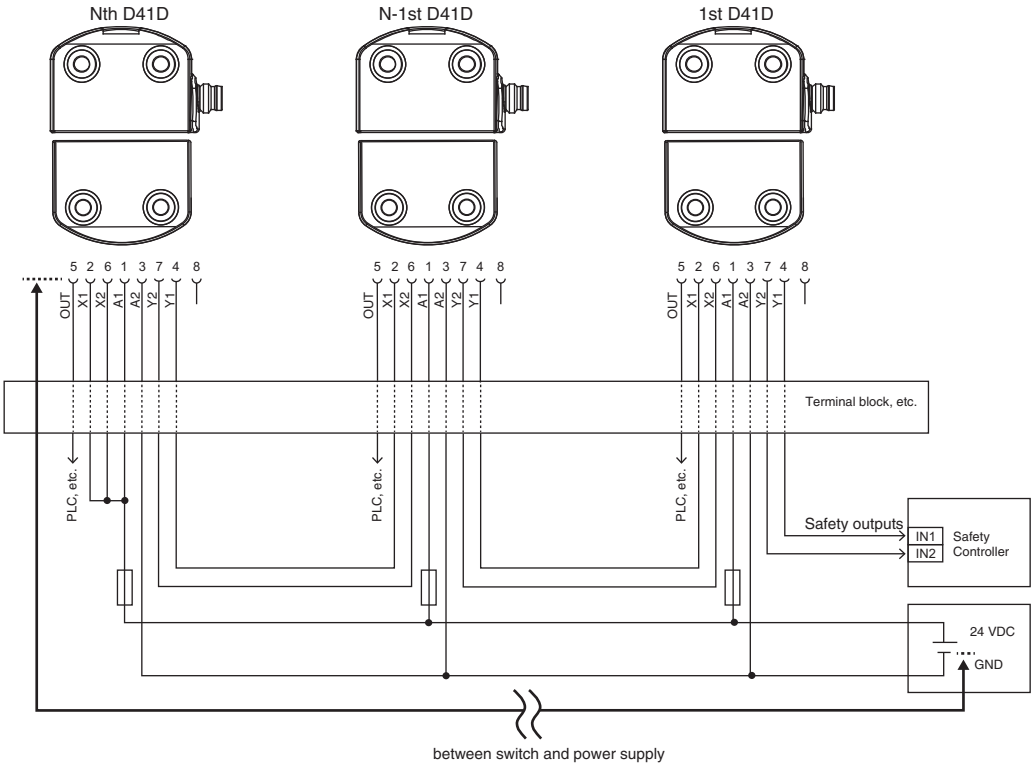

Note: The cable length between the switch and power supply must not exceed 100 m.

Downloaded from Arrow.com.

Safety controller settings

		NX-SL and NX-SI	GI-SMD/SID	G9SP
OMRON's safety controller				
Input device setting	**Input device**	Semiconductor Output for Dual Channel Equivalent 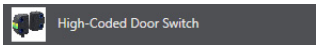	Semiconductor Output for Dual Channel Equivalent 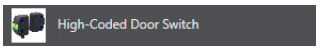	Dual Safety Semiconductor Output (Equivalent) 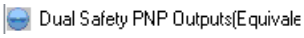
	Discrepancy time	Set discrepancy time to 100 ms or more NX-Series Safety Control Unit User's Manual Refer to the Dual Channel Evaluation in Cat. No.Z930. Example (Default value when "High-Coded Door Switch" is selected) 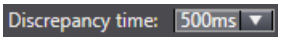	Set discrepancy time to 100 ms or more GI-S series Safety I/O Terminal User's Manual Refer to the Dual Channel Evaluation in Cat. No.Z400. Example (Default value when "High-Coded Door Switch" is selected) 	Set discrepancy time to 0 (disabled) or 100 ms or more G9SP series Safety Controller User's Manual Refer to the Dual Channel Evaluation in Cat. No.Z922. Example
	Filtering out test pulses	Set input filter ON->OFF delay time to 1 ms or more NX-Series Safety Control Unit User's Manual Refer to the Input Filters in Cat. No.Z930. Example (Default value when "High-Coded Door Switch" is selected) 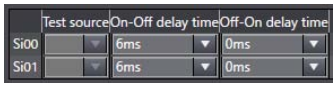	Set input filter ON->OFF delay time to 1 ms or more GI-S series Safety I/O Terminal User's Manual Refer to the Input Filter Function in Cat. No.Z400. Example (Default value when "High-Coded Door Switch" is selected) 	Set input filter OFF delay time to 1 ms or more G9SP series Safety Controller User's Manual Refer to the Input Filters in Cat. No.Z922. Example 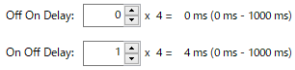

Note: The ON → OFF delay time affects the response time (safety reaction time) of the system.
Add the setting value to the system response time in each controller. For details on calculating the response time, refer to the manual of each controller.

Combination with a safety relay unit

		G9SA	G9SE	G9SB	G9SX
OMRON's safety relay unit					
Input device Safety-door switch	**D41D**	Connectable	Not connectable	Connectable	Connectable ✻1

✻**1.** The G9SX-NS□ cannot be connected to D41D.
✻**2.** Refer to the instruction manual or user's manual of each product for how to extend the wiring.

Downloaded from Arrow.com.

Teaching

The D41D will require the following teaching procedure to write individual actuator information (code).
Saving individual actuator information for identification to the switch through the teaching procedure is called "individual coding".

1. Keep the actuator away from the detection range and switch the safety door switch's voltage supply off and back on.
2. Introduce the actuator in the detection range. The teach-in procedure is signalled at the safety door switch, red LED on, yellow LED flashes (1 Hz).
3. After 10 seconds, the yellow LED gives brief cyclic flashes (3 Hz). Switch off the supply voltage of the safety door switch. (If the voltage is not switched off within 5 minutes, the safety door switch cancels the teach-in procedure and signals a false actuator by 5 red flashes).
4. Switch the supply voltage back on. The actuator must be detected once more in order to activate the taught actuator code. In this way, the activated code is definitively saved.

For ordering suffix D41D-1, the executed allocation of safety door switch and actuator is irreversible.
When the above procedure is attempted with a D41D-1 which already completed teaching, the teaching procedure will not start.

For ordering suffix D41D-2, the teach-in procedure for a new actuator can be repeated an unlimited number of times. When a new actuator is taught, the code, which was applicable until that moment, becomes invalid. Subsequent to that, the safety outputs (OSSD) will be disabled for ten minutes, thus providing for an increased protection against intentional tampering.
In case of power failure during the lapse of time, the 10-minute time of the enabling inhibit will stop and start from zero again when power is restored.
When the above procedure is attempted with a combination of D41D-2 and actuator which already completed teaching, the teaching procedure will not start.

The D41D-A Actuator can be taught an unlimited number of times. This allows the actuator taught by the D41D-1 to be taught again by the D41D-2 with no teaching limitation instead of the D41D-1 with teaching limitation.

Operating Principle

Operating Principle

The safety outputs (OSSD) can be connected to the safety circuit of the control system. The opening of a guard door, i.e. the actuator is removed out of the active zone of the safety door switch, will immediately disable the safety outputs (OSSD) of the safety door switch.
(For operating distances, refer to *Ratings and Specifications* on page 5.)

Any error that does not immediately affect the functionality of the safety door switch (e.g. too high ambient temperature, interference potential at the safety outputs (OSSD), cross-wire short) will lead to a warning message, disabling of the auxiliary output and a delayed shutdown of the safety outputs (OSSD). (Refer to Table 2 on page 12.)

The safety outputs (OSSD) are disabled if the error warning is active for 30 minutes. The signal combination, auxiliary output disabled and safety channels still enabled, can be used to stop the production process in a controlled manner.

Downloaded from Arrow.com.

Diagnostic Functions

Diagnostic LEDs

The safety door switch indicates the operating condition and faults by means of three-color LEDs located in the front surface of the safety door switch.

- Green (Power): Supply voltage on
- Yellow (Status): Operating condition
- Red (Fault): Error (refer to Table 2)

The safety door switch indicates the operating condition and faults by means of three-color LEDs located in the lateral surfaces of the safety door switch.
The green LED indicates that the safety door switch is ready for operation. The supply voltage is on and all safety inputs are present. Flashing (1 Hz) of the green LED signals that a voltage is missing on one or both of the safety inputs (X1 and/or X2).
The yellow LED always signals the presence of an actuator within range.
If the actuator is operating near the limit of the differential travel range of the safety door switch, the LED is flashing.
The flashing can be used to prematurely detect variations in the clearance between the safety door switch and the actuator (e.g. sagging of a guard door). The safety door switch must be adjusted before the distance to the actuator increases and before the safety outputs (OSSD) are disabled, thus stopping the machine. If an error is detected, the red LED will be activated.

Auxiliary output

An auxiliary output additionally indicates the operating condition (refer to Table 1). The auxiliary output OUT can be used for central visualization or control functions, e.g. in a PLC. It indicates the switching condition as shown in Table 1.

Table 1: Diagnostic information for safety door switch

Status of switch	LEDs			Auxiliary output	Safety outputs Y1, Y2	Note
	Green	Red	Yellow			
Supply voltage	On	Off	Off	0 V	0 V	Voltage on
Actuated	On	Off	On	24 V	24 V	The yellow LED always signals the presence of an actuator within range.
Actuated in limit area	On	Off	Flashes (1Hz)	24 V pulsed	24 V	The safety door switch must be adjusted before the distance to the actuator increases and before the safety outputs are disabled, thus stopping the machine.
Error warning, switch actuated	Off	Flashes	On	0 V	24 V	When the error warning is not rectified, the safety outputs are disabled after 30 minutes.
Error	Off	Flashes	On	0 V	0 V	Refer to Table 2
Teach actuator	Off	On	Flashes	0 V	0 V	Safety door switch in teaching mode
Tampering protection time ✻1	Flashes	Off	Off	0 V	0 V	10 minutes pause after re-teaching
Error in input circuit X1 and/or X2	Flashes (1Hz)	Off	Off	0 V	0 V	When door is open
Error in input circuit X1 and/or X2	Flashes (1Hz)	Off	On	24 V	0 V	When door is closed

✻1. Refer to *Teaching* on page 11.

Table 2: Error message/LED indication (red)

LED indication (red)		Error cause
1 flash pulse		Error output Y1
2 flash pulses		Error output Y2
3 flash pulses		Cross-wire short between Y1 and Y2
4 flash pulses		Ambient temperature too high
5 flash pulses		Incorrect or defective actuator
Continuous red		Internal fault, with yellow flashing teaching procedure

Downloaded from Arrow.com.

Dimensions

(Unit: mm)

Switches

D41D-1CD-N1

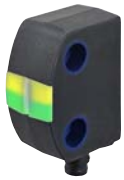

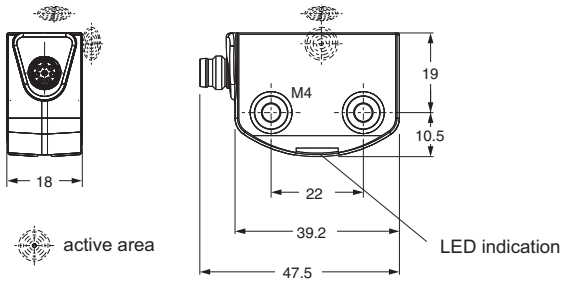

D41D-2CD-025N2

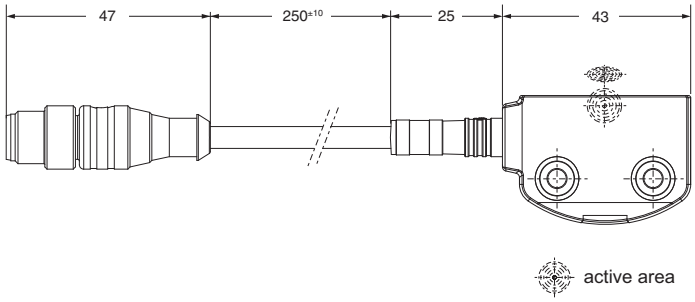

Downloaded from Arrow.com.

(Unit: mm)

Actuator (Sold separately)

D41D-A1

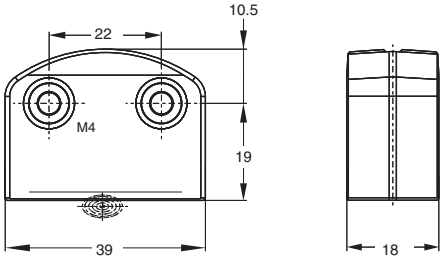

active area

M4 screw
(Tightening torque: 0.8 N•m)

D41D-A2

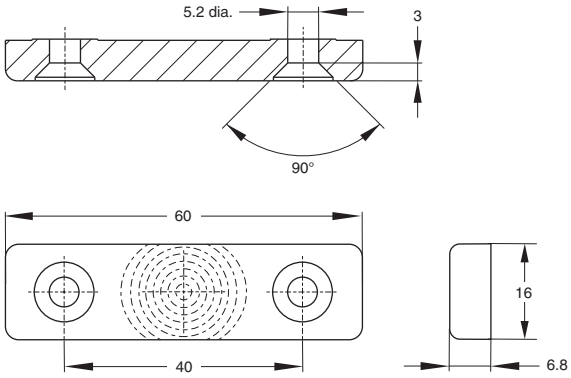

active area

M5 countersunk screw
(Tightening torque: 2 N•m)

D41D-A3

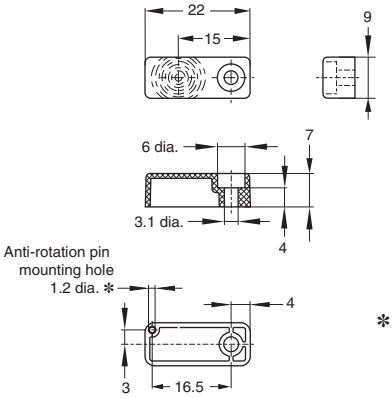

✻ D41D-A3 mounting hole is fixed in place with an M3 screw. The actuator can be prevented from twisting caused by screw tightening torque during installation by passing a pin up to 1.1 mm in size through the hole in the rear section of the D41D-A3.

active area

M3 screw
(Tightening torque: 0.6 N•m)
1.2 dia. hole, plus Twist protection

Accessory (Sold separately)

Sealing kit

D41D-SK

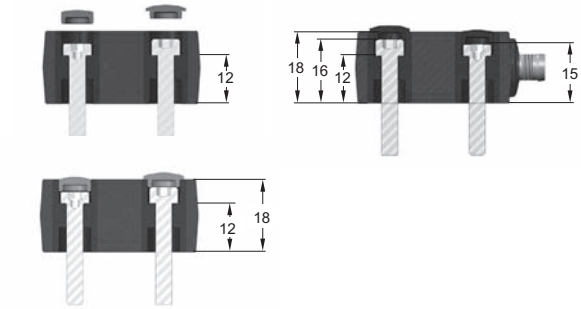

Mounting Set

D41D-MS

OMRON
Downloaded from Arrow.com.

Mounting

The mounting holes provide for a mounting by means of M4 screws (max. tightening torque 0.8 N•m).
The product can be mounted in any position. The minimum bend radius of the cable is 25 mm.
The active areas of the safety door switch and the actuator have to face each other.
The safety door switch must only be used within the assured operating distances ≤ Sao and ≥ Sar.

To avoid any interference inherent to this kind of system and any reduction of the operating distances, please observe the following guidelines:

- See the figures below for the minimum distances between two safety door switches and other systems of the same frequency (125 kHz).

[Unit: mm]

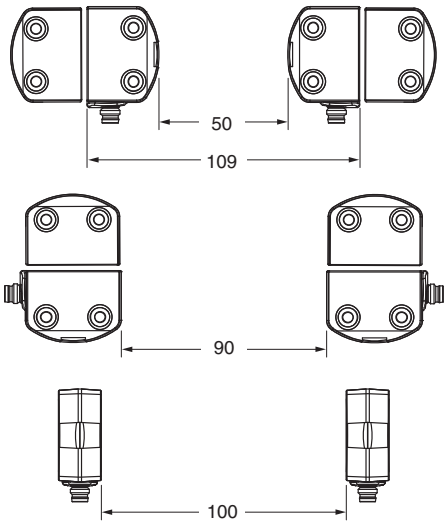

Downloaded from Arrow.com.

Troubleshooting

Operation in case of errors

Errors that, which no longer guarantee the function of the safety door switch (internal errors) cause the safety outputs (OSSD) to be disabled within the risk time.
After the rectification of the error, the error message is reset by opening the corresponding guard door.

Error warning

When an error (warning) occurs, the safety outputs (OSSD) are disabled after being enabled for 30 minutes.After the error cause is removed, the warning indication (e.g., LED flashes) is reset.

Diagnostic information for switch and error message

The switch indicates the operating condition and faults with its three-color LED and the errors with its red LED. Refer to Tables 1 and 2 on page 12 for details.

Downloaded from Arrow.com.

Wiring

Wiring example 1. D41D and G9SA Wiring Example (Single Connection)

Model
Safety Door Switch D41D-□CD-□□/D41D-A□
Safety Relay Unit G9SA-301 (24 VAC/VDC)

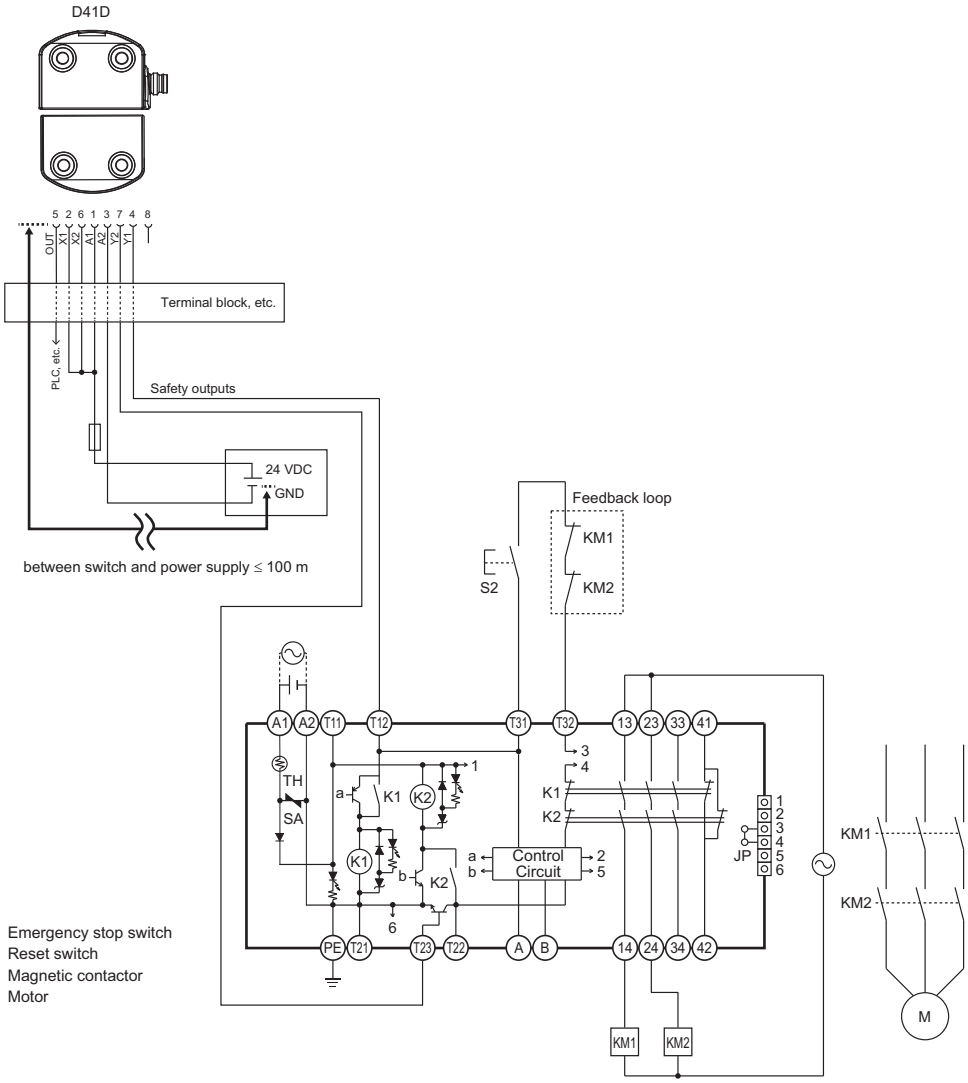

S1:	Emergency stop switch
S2:	Reset switch
KM1 and KM2:	Magnetic contactor
M:	Motor

Downloaded from Arrow.com.

Wiring 2. D41D and G9SA Wiring Example (Series Connection)

Model
Safety Door Switch D41D-□CD-□□/D41D-A□
Safety Relay Unit G9SA-301 (24 VAC/VDC)

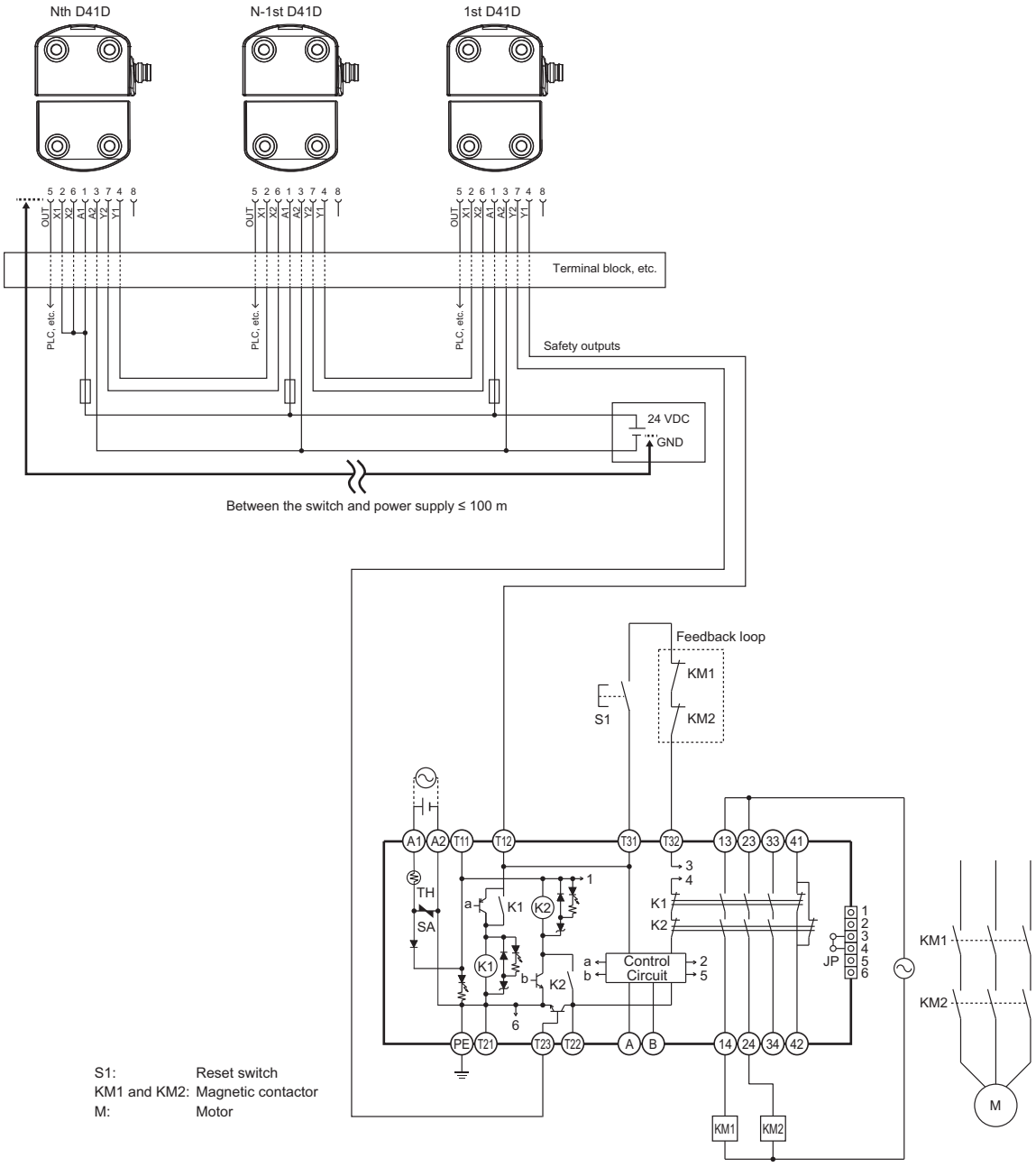

OMRON
Downloaded from Arrow.com.

Set-up and Maintenance/Disassembly and Disposal

Set-up and Maintenance

Functional testing

The safety function of the safety components must be tested.
The following conditions must be previously checked and met:

1. Fitting of the switch and the actuator.
2. Fitting and integrity of the power cable.
3. The system is free of dirt and soiling (in particular metal chips).

Maintenance

Maintenance frequency
SIL3 / PLe at least once a month
SIL2 / PLd at least once a year

The following inspections must be carried out:
(Daily inspection)

- For each guard door, check that the machine stops when the guard door opens.

(Inspection every 6 months)
Regularly conduct visual and functional inspections including:

1. Check the fitting and integrity of the safety door switch, the actuator and the cable.
2. Remove possible metal chips.
3. Check that the cable is connected correctly and there is no problem.

Disassembly and Disposal

Disassembly

The product must be disassembled in a de-energized condition only.

Disposal

The product must be disposed of in an appropriate manner in accordance with the national prescriptions and legislations.

Downloaded from Arrow.com.

Safety Precautions

Be sure to read the precautions for all models in the website at: http://www.ia.omron.com/.

Indication and Meaning for Safe Use

Warning Indications

⚠ WARNING	**Indicates a potentially hazardous situation which, if not avoided, will result in minor or moderate injury, or may result in serious injury or death. Additionally there may be significant property damage.**
Precautions for Safe Use	**Supplementary comments on what to do or avoid doing, to use the product safely.**
Precautions for Correct Use	**Supplementary comments on what to do or avoid doing, to prevent failure to operate, or undesirable effect on product performance.**

Meaning of Product Safety Symbols

	General prohibition Instructions on unspecified prohibited action.
	General instructions Instructions on unspecified general action.

⚠ WARNING

Use only appropriate components or devices complying with relevant safety standards corresponding to the required performance level and safety category. Failure to do so may result in serious injury or death. Conformity to requirements of the performance level and safety category must be determined as an entire system. It is recommended to consult a certification body regarding assessment of conformity to the required safety level.

Do not apply DC voltages exceeding the rated voltages, nor any AC voltages to the product. Failure to do so may result in serious injury or death.

Install the switch and actuator in a position where the opening of the guard door can be detected within a safe distance. Failure to do so may result in serious injury or death.

When complying with safety standards, install the product in an appropriate manner in accordance with ISO 14119, with due consideration of the risk of defeat by the operator. Failure to do so may result in serious injury or death.

Make sure that the DC power supply meets the following items. Failure to do so may result in serious injury or death.
- **Satisfies the requirements of PELV power supply defined in IEC 60204-1.**
- **Satisfies the requirements of class 2 circuits defined in UL508.**

Precautions for Safe Use

1. Disconnect the product from power supply when wiring the product. Failure to do so may cause unexpected operation of devices connected to the product.
2. Wire the input and output terminals correctly and verify the correct operation of the product before using the system in which the product is incorporated. Incorrect wiring may lead to loss of the safety function.
3. Do not use the product in any direction other than the specified mounting orientations of the main body and actuator.
4. Dispose of the product in accordance with the laws set by each country.

Precautions for Correct Use

1. Do not drop the product to the ground or expose to excessive vibration or mechanical shocks. Doing so may damage the product and cause failure.
2. Do not store or use the product under the following conditions. Doing so may damage the product and cause failure.
   1) At ambient operating temperatures out of the range of -25 to 65°C
   2) At ambient storage temperatures out of the range of -25 to 85°C
   3) At relative humidity of 93% or more
   4) In direct sunlight
   5) Under drastic temperature changes
   6) In high humidity that causes condensation
3. Keep the product away from oil or solvent.
   Oil or solvent make the marking on the product illegible and cause deterioration of some parts.
4. Do not use in an environment with corrosive gas.
5. The product may not operate normally in the vicinity of devices that generate strong radio waves or magnetic fields, such as RFID systems, proximity sensors, motors, inverters, and switch-mode power supplies. If the device is used in the vicinity of such devices, check the effect before use.
6. Installing the switch and the actuator on a metallic material may affect the operating distance. If installation on a metallic material is necessary, be sure to check the effect on the operating distance before use.
7. Tighten the screws with a specified torque.
8. Use the wires specified by OMRON to wire the product.
   (Refer to *Connection* on page 9.)
9. Do not extend the cables in excess of the specification of this product. Carry out electrical connection according to the wiring examples shown in this document and verify the correct operation of the product.
10. During installation, make sure that the safety door switch does not come in contact with the actuator due to rattling of the guard door. (The performance of the product may be degraded by a collision caused by opening or closing the guard door.)
11. Do not pull or bend the cable excessively.
    A disconnection may cause a malfunction.
12. Risk time remains unchanged by series connection. However, carry out electrical connection according to the wiring examples shown in this document.
13. Be sure to inspect the product daily and every 6 months. Failure to do so may cause a system failure and serious injury.
14. When determining the safety distance, take into account the delay of the output of the product caused by the response time. Failure to do so may cause the operator to reach the hazardous source before the machine is stopped, resulting in serious injury.
15. Install the product so that the LED indicators of the safety door switch are as visible as possible. Misinterpreting the status of the safety door switch may result in danger.
16. Do not use the product at an altitude of 2,000 m or higher.
17. Do not connect a product different from this product in series with this product. Doing so may disturb waveforms of the input and output signals, leading to loss of the safety function.
18. Do not use the product in the water or continuous water exposure environment. Doing so may cause water to leak into the product. (The degree of protection does not guarantee the protection under continuous water exposure environment.)

Downloaded from Arrow.com.

19. Do not tamper the product with a replacement actuator. Store replacement actuators in a safe place where they cannot be easily reached.
20. Build a safety system using the outputs of both Safety Outputs 1 and 2. Wiring with only one safety output may lead to loss of the safety function due to a single failure.
21. Wiring should meet the requirements specified in Section 9.4.3 of IEC 60204-1 to prevent malfunction due to ground faults in the safety output lines.
22. Do not wire the product to an input of a safety controller in parallel.
23. Do not try to disassemble, repair, or modify the product. Doing so may cause loss of the safety function.
24. Do not operate the product in an environment with flammable or explosive gas.
25. After installation of the product, qualified personnel should verify to see that the installation, inspection, and maintenance are properly performed. The qualified personnel should be qualified and authorized to secure the safety on each phase of design, installation, running, maintenance and disposal of system.
26. Auxiliary output is NOT a safety output. Do not use the Auxiliary output individually for any safety function. Such incorrect use causes loss of the safety function of the product and its relevant systems.
27. Disconnect the product and the controller connected to the product from power supply when replacing the product. Failure to do so may cause unexpected operation of devices connected to the product.
28. The safety function may not operate normally due to a malfunction of the wiring, setting, or switch, and the machine may continue to operate, which may result in personal injury. Make sure that the safety function works before starting operation.
29. Do not use the product as a door stopper. (The performance of the product may be degraded due to a collision caused by opening and closing the guard door.)

Downloaded from Arrow.com.

MEMO

OMRON
Downloaded from Arrow.com.

Terms and Conditions Agreement

Read and understand this catalog.

Please read and understand this catalog before purchasing the products. Please consult your OMRON representative if you have any questions or comments.

Warranties.

(a) Exclusive Warranty. Omron's exclusive warranty is that the Products will be free from defects in materials and workmanship for a period of twelve months from the date of sale by Omron (or such other period expressed in writing by Omron). Omron disclaims all other warranties, express or implied.

(b) Limitations. OMRON MAKES NO WARRANTY OR REPRESENTATION, EXPRESS OR IMPLIED, ABOUT NON-INFRINGEMENT, MERCHANTABILITY OR FITNESS FOR A PARTICULAR PURPOSE OF THE PRODUCTS. BUYER ACKNOWLEDGES THAT IT ALONE HAS DETERMINED THAT THE PRODUCTS WILL SUITABLY MEET THE REQUIREMENTS OF THEIR INTENDED USE.

Omron further disclaims all warranties and responsibility of any type for claims or expenses based on infringement by the Products or otherwise of any intellectual property right. (c) Buyer Remedy. Omron's sole obligation hereunder shall be, at Omron's election, to (i) replace (in the form originally shipped with Buyer responsible for labor charges for removal or replacement thereof) the non-complying Product, (ii) repair the non-complying Product, or (iii) repay or credit Buyer an amount equal to the purchase price of the non-complying Product; provided that in no event shall Omron be responsible for warranty, repair, indemnity or any other claims or expenses regarding the Products unless Omron's analysis confirms that the Products were properly handled, stored, installed and maintained and not subject to contamination, abuse, misuse or inappropriate modification. Return of any Products by Buyer must be approved in writing by Omron before shipment. Omron Companies shall not be liable for the suitability or unsuitability or the results from the use of Products in combination with any electrical or electronic components, circuits, system assemblies or any other materials or substances or environments. Any advice, recommendations or information given orally or in writing, are not to be construed as an amendment or addition to the above warranty.

See http://www.omron.com/global/ or contact your Omron representative for published information.

Limitation on Liability; Etc.

OMRON COMPANIES SHALL NOT BE LIABLE FOR SPECIAL, INDIRECT, INCIDENTAL, OR CONSEQUENTIAL DAMAGES, LOSS OF PROFITS OR PRODUCTION OR COMMERCIAL LOSS IN ANY WAY CONNECTED WITH THE PRODUCTS, WHETHER SUCH CLAIM IS BASED IN CONTRACT, WARRANTY, NEGLIGENCE OR STRICT LIABILITY.

Further, in no event shall liability of Omron Companies exceed the individual price of the Product on which liability is asserted.

Suitability of Use.

Omron Companies shall not be responsible for conformity with any standards, codes or regulations which apply to the combination of the Product in the Buyer's application or use of the Product. At Buyer's request, Omron will provide applicable third party certification documents identifying ratings and limitations of use which apply to the Product. This information by itself is not sufficient for a complete determination of the suitability of the Product in combination with the end product, machine, system, or other application or use. Buyer shall be solely responsible for determining appropriateness of the particular Product with respect to Buyer's application, product or system. Buyer shall take application responsibility in all cases.

NEVER USE THE PRODUCT FOR AN APPLICATION INVOLVING SERIOUS RISK TO LIFE OR PROPERTY OR IN LARGE QUANTITIES WITHOUT ENSURING THAT THE SYSTEM AS A WHOLE HAS BEEN DESIGNED TO ADDRESS THE RISKS, AND THAT THE OMRON PRODUCT(S) IS PROPERLY RATED AND INSTALLED FOR THE INTENDED USE WITHIN THE OVERALL EQUIPMENT OR SYSTEM.

Programmable Products.

Omron Companies shall not be responsible for the user's programming of a programmable Product, or any consequence thereof.

Performance Data.

Data presented in Omron Company websites, catalogs and other materials is provided as a guide for the user in determining suitability and does not constitute a warranty. It may represent the result of Omron's test conditions, and the user must correlate it to actual application requirements. Actual performance is subject to the Omron's Warranty and Limitations of Liability.

Change in Specifications.

Product specifications and accessories may be changed at any time based on improvements and other reasons. It is our practice to change part numbers when published ratings or features are changed, or when significant construction changes are made. However, some specifications of the Product may be changed without any notice. When in doubt, special part numbers may be assigned to fix or establish key specifications for your application. Please consult with your Omron's representative at any time to confirm actual specifications of purchased Product.

Errors and Omissions.

Information presented by Omron Companies has been checked and is believed to be accurate; however, no responsibility is assumed for clerical, typographical or proofreading errors or omissions.

Downloaded from Arrow.com.

High-Coded Safety Door Switch

High-Coded Non-Contact Safety Door Switch D41D (No.F112)

High-Coded Guard Lock Safety Door Switch D41L (No.F113)

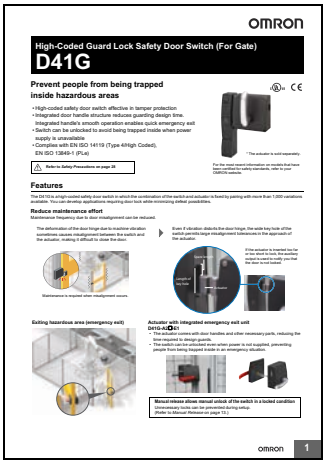

High-Coded Guard Lock (For Gate) Safety Door Switch D41G (No.F114)

Note: Do not use this document to operate the Unit.

OMRON Corporation **Industrial Automation Company**

Kyoto, JAPAN **Contact : www.ia.omron.com**

Regional Headquarters

OMRON EUROPE B.V.
Wegalaan 67-69, 2132 JD Hoofddorp
The Netherlands
Tel: (31) 2356-81-300 Fax: (31) 2356-81-388

OMRON ELECTRONICS LLC
2895 Greenspoint Parkway, Suite 200
Hoffman Estates, IL 60169 U.S.A.
Tel: (1) 847-843-7900 Fax: (1) 847-843-7787

OMRON ASIA PACIFIC PTE. LTD.
438B Alexandra Road, #08-01/02 Alexandra
Technopark, Singapore 119968
Tel: (65) 6835-3011 Fax: (65) 6835-3011

OMRON (CHINA) CO., LTD.
Room 2211, Bank of China Tower,
200 Yin Cheng Zhong Road,
PuDong New Area, Shanghai, 200120, China
Tel: (86) 21-6023-0333 Fax: (86) 21-5037-2388

Authorized Distributor:

©OMRON Corporation 2021-2025 All Rights Reserved.
In the interest of product improvement,
specifications are subject to change without notice.

CSM_5_4

Cat. No. F112-E1-08 0325 (0321)

Downloaded from Arrow.com.