Overview

The KEMET ESW radial aluminum electrolytic capacitors are designed for long life (3,000 – 6,000 hours), high reliability, low impedance, and high frequency applications.

Applications

Typical applications include high frequency switch mode circuits.

Benefits

- Suited for long life, high reliability applications
- Operating temperature of up to +105°C
- 3,000 – 6,000 hour operating life
- Case with Ø D ≥ 5 mm
- Safety vent on the capacitor base

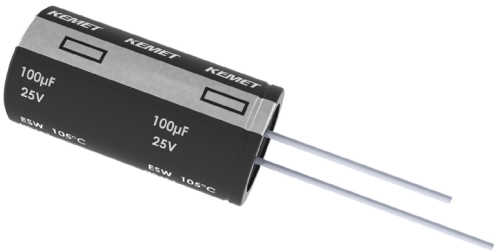

Part Number System

ESW	157	M	6R3		A	C3	AA
Series	Capacitance Code (pF)	Tolerance	Rated Voltage (VDC)		Electrical Parameters	Size Code	Packaging
Radial Aluminum Electrolytic	First two digits represent significant figures for capacitance values. Last digit specifies the number of zeros to be added.	M = ±20%	6R3 = 6.3 010 = 10 016 = 16 025 = 25	035 = 35 050 = 50 063 = 63 100 = 100	A = Standard	See Dimension Table	See Ordering Options Table

Downloaded from Arrow.com.

Ordering Options Table

Diameter	Length	Packaging Type	Lead Type	Lead Length (mm)	Lead and Packaging Code
Standard Bulk Packaging Options					
4 – 22	All	Bulk (bag)	Straight	20/15 Minimum	AA
Tape & Reel					
4 – 5	All	Tape & Reel	Formed to 2.5 mm	H_0 = 16 ±0.75	LA
4 – 8	All	Tape & Reel	2.5 mm lead spacing	H_0 = 18.5 ±0.75	KA
4 – 8	All	Tape & Reel	Formed to 5 mm	H_0 = 16 ±0.75	JA
10	≤ 20	Tape & Reel	Straight	H_0 = 18.5 ±0.75	KA
Ammo Pack					
4 – 8	All	Ammo	Formed to 5 mm	H_0 = 16 ±0.75	DA
4 – 8	All	Ammo	Straight	H_0 = 18.5 ±0.75	EA
4 – 5	All	Ammo	Formed to 2.5 mm	H_0 = 16 ±0.75	FA
10 – 13	All	Ammo	5 mm lead spacing	H_0 = 18.5 ±0.75	EA
16	All	Ammo	7.5 mm lead spacing	H_0 = 18.5 ±0.75	EA
18	≤ 25	Ammo	7.5 mm lead spacing	H_0 = 18.5 ±0.75	EA
Contact KEMET for other lead and packaging options					

Environmental Compliance

As an environmentally conscious company, KEMET is working continuously with improvements concerning the environmental effects of both our capacitors and their production. In Europe (RoHS Directive) and in some other geographical areas like China, legislation has been put in place to prevent the use of some hazardous materials, such as lead (Pb), in electronic equipment. All products in this catalog are produced to help our customers' obligations to guarantee their products and fulfill these legislative requirements. The only material of concern in our products has been lead (Pb), which has been removed from all designs to fulfill the requirement of containing less than 0.1% of lead in any homogeneous material. KEMET will closely follow any changes in legislation world wide and make any necessary changes in its products, whenever needed.

Some customer segments such as medical, military and automotive electronics may still require the use of lead in electrode coatings. To clarify the situation and distinguish products from each other, a special symbol is used on the packaging labels for RoHS compatible capacitors.

Due to customer requirements, there may appear additional markings such as lead free (LF) or lead-free wires (LFW) on the label.

Downloaded from Arrow.com.

Dimensions – Millimeters

SIDE VIEW

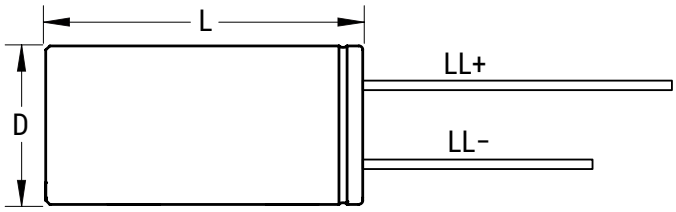

TERMINAL END VIEW

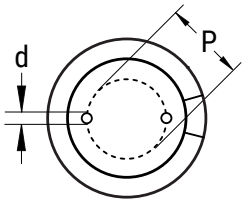

Size Code	D		L		P		d		LL+/LL-
	Nominal	Tolerance	Nominal	Tolerance	Nominal	Tolerance	Nominal	Tolerance	Minimum
C3	5.0	±0.5	11	±1.5	2.0	±0.5	0.5	Nominal	20/15
E3	6.3	±0.5	11	±1.5	2.5	±0.5	0.5	Nominal	20/15
E4	6.3	±0.5	15	±2.0	2.5	±0.5	0.5	Nominal	20/15
G3	8.0	±0.5	11	±1.5	3.5	±0.5	0.6	Nominal	20/15
G9	8.0	±0.5	12	±2.0	3.5	±0.5	0.6	Nominal	20/15
G4	8.0	±0.5	15	±2.0	3.5	±0.5	0.6	Nominal	20/15
G6	8.0	±0.5	20	±2.0	3.5	±0.5	0.6	Nominal	20/15
H9	10.0	±0.5	12.5	±1.5	5.0	±0.5	0.6	Nominal	20/15
H2	10.0	±0.5	15	±2.0	5.0	±0.5	0.6	Nominal	20/15
H8	10.0	±0.5	16	±2.0	5.0	±0.5	0.6	Nominal	20/15
H4	10.0	±0.5	20	±2.0	5.0	±0.5	0.6	Nominal	20/15
H5	10.0	±0.5	25	±2.0	5.0	±0.5	0.6	Nominal	20/15
H6	10.0	±0.5	30	±2.0	5.0	±0.5	0.6	Nominal	20/15
L2	13.0	±0.5	16	±2.0	5.0	±0.5	0.6	Nominal	20/15
L3	13.0	±0.5	20	±2.0	5.0	±0.5	0.6	Nominal	20/15
L4	13.0	±0.5	25	±2.0	5.0	±0.5	0.6	Nominal	20/15
L7	13.0	±0.5	40	±2.0	5.0	±0.5	0.6	Nominal	20/15
L8	13.0	±0.5	30	±2.0	5.0	±0.5	0.6	Nominal	20/15
L6	13.0	±0.5	35	±2.0	5.0	±0.5	0.6	Nominal	20/15
M8	16.0	±0.5	16	±2.0	7.5	±0.5	0.8	Nominal	20/15
M5	16.0	±0.5	20	±2.0	7.5	±0.5	0.8	Nominal	20/15
M7	16.0	±0.5	25	±2.0	7.5	±0.5	0.8	Nominal	20/15
M2	16.0	±0.5	32	±2.0	7.5	±0.5	0.8	Nominal	20/15
M3	16.0	±0.5	36	±2.0	7.5	±0.5	0.8	Nominal	20/15
M4	16.0	±0.5	40	±2.0	7.5	±0.5	0.8	Nominal	20/15
N6	18.0	±0.5	16	±2.0	7.5	±0.5	0.8	Nominal	20/15
N4	18.0	±0.5	20	±2.0	7.5	±0.5	0.8	Nominal	20/15
N5	18.0	±0.5	25	±2.0	7.5	±0.5	0.8	Nominal	20/15
N1	18.0	±0.5	32	±2.0	7.5	±0.5	0.8	Nominal	20/15
N2	18.0	±0.5	36	±2.0	7.5	±0.5	0.8	Nominal	20/15
N3	18.0	±0.5	40	±2.0	7.5	±0.5	0.8	Nominal	20/15
N3	18.0	±0.5	40	±2.0	7.5	±0.5	0.8	Nominal	20/15

Downloaded from Arrow.com.

Performance Characteristics

Item	Performance Characteristics
Capacitance Range	2.2 – 15,000 µF
Capacitance Tolerance	±20% at 120 Hz/20°C
Rated Voltage	6.3 – 100 VDC
Life Test	3,000 – 6,000 hours (see conditions in Test Method & Performance)
Operating Temperature	−40°C to +105°C
Leakage Current	I ≤ 0.01 CV or 3 µA, whichever is greater
	C = rated capacitance (µF), V = rated voltage (VDC). Voltage applied for 2 minutes at 20°C.

Impedance Z Characteristics at 120 Hz

Rated Voltage (VDC)	6	10	16	25	35	50	63	100
Z (−25°C)/Z (20°C)	4	3	2	2	2	2	2	2
Z (−40°C)/Z (20°C)	8	6	4	3	3	3	3	3

Compensation Factor of Ripple Current (RC) vs. Frequency

Capacitance Range (µF)	120 Hz	1 kHz	10 kHz	100 kHz
2.2 – 180	0.40	0.75	0.90	1.00
220 – 560	0.50	0.85	0.94	1.00
680 – 1,800	0.60	0.87	0.95	1.00
2,200 – 3,900	0.75	0.90	0.95	1.00
4,700 – 15,000	0.85	0.95	0.98	1.00

Downloaded from Arrow.com.

Test Method & Performance

Conditions	Load Life Test		Shelf Life Test
Temperature	105°C		105°C
Test Duration	Can Ø ≤ 6.3 mm	3,000 hours	1,000 hours
	Can Ø = 8.0 mm	4,000 hours	
	Can Ø = 10.0 mm	5,000 hours	
	Can Ø ≥ 13.0 mm	6,000 hours	
	If dimension is down size, endurance will be 1,000 hours less than standard		
Ripple Current	Maximum ripple current specified at 100 kHz 105°C		No ripple current applied
Voltage	The sum of DC voltage and the peak AC voltage must not exceed the rated voltage of the capacitor		No voltage applied
Performance	**The following specifications will be satisfied when the capacitor is restored to 20°C:**		
Capacitance Change	Within ±25% of the initial value		
Dissipation Factor	Does not exceed 200% of the specified value		
Leakage Current	Does not exceed specified value		

Shelf Life

The capacitance, ESR and impedance of a capacitor will not change significantly after extended storage periods, however, the leakage current will very slowly increase.

KEMET's E aluminum electrolytic capacitors should not be stored in high temperatures or where there is a high level of humidity. The suitable storage condition for KEMET's E aluminum electrolytic capacitors is +5 to +35°C and less than 75% in relative humidity. KEMET's E aluminum electrolytic capacitors should not be stored in damp conditions such as water, saltwater spray or oil spray. KEMET's E aluminum electrolytic capacitors should not be stored in an environment full of hazardous gas (hydrogen sulphide, sulphurous acid gas, nitrous acid, chlorine gas, ammonium, etc.) KEMET's E aluminum electrolytic capacitors should not be stored under exposure to ozone, ultraviolet rays or radiation.

If a capacitor has been stored for more than 18 months under these conditions and it shows increased leakage current, then a treatment by voltage application is recommended.

Re-Age (Reforming) Procedure

Apply the rated voltage to the capacitor at room temperature for a period of one hour, or until the leakage current has fallen to a steady value below the specified limit. During re-aging a maximum charging current of twice the specified leakage current or 5 mA, whichever is greater, is suggested.

Downloaded from Arrow.com.

Table 1 – Ratings & Part Number Reference

VDC	VDC Surge Voltage	Rated Capacitance 120 Hz 20°C (µF)	Case Size D x L (mm)	DF 120 Hz 20°C (tan δ %)[1]	RC 100 kHz 105°C (mA)	LC 20°C 2 Minutes (µA)	Part Number
6.3	8	150	5 x 11	22	210	9.5	ESW157M6R3AC3(1)
6.3	8	330	6.3 x 11	22	340	20.8	ESW337M6R3AE3(1)
6.3	8	470	6.3 x 11	22	510	29.6	ESW477M6R3AE3(1)
6.3	8	680	8 x 11	22	640	42.8	ESW687M6R3AG3(1)
6.3	8	820	10 x 12.5	22	865	51.7	ESW827M6R3AH9(1)
6.3	8	1000	8 x 15	22	840	63.0	ESW108M6R3AG4(1)
6.3	8	1200	8 x 20	22	1050	75.6	ESW128M6R3AG6(1)
6.3	8	1200	10 x 16	22	1210	75.6	ESW128M6R3AH8(1)
6.3	8	1500	8 x 20	22	1050	94.5	ESW158M6R3AG6(1)
6.3	8	1500	*10 x 16	22	1210	94.5	ESW158M6R3AH8(1)
6.3	8	1500	10 x 20	22	1400	94.5	ESW158M6R3AH4(1)
6.3	8	1800	13 x 16	22	1450	113.4	ESW188M6R3AL2(1)
6.3	8	2200	*10 x 20	22	1400	138.6	ESW228M6R3AH4(1)
6.3	8	2200	10 x 25	22	1650	138.6	ESW228M6R3AH5(1)
6.3	8	2700	10 x 30	22	1910	170.1	ESW278M6R3AH6(1)
6.3	8	2700	16 x 16	22	1940	170.1	ESW278M6R3AM8(1)
6.3	8	3300	10 x 25	22	1650	207.9	ESW338M6R3AH5(1)
6.3	8	3300	13 x 20	22	1900	207.9	ESW338M6R3AL3(1)
6.3	8	3900	13 x 25	22	2230	245.7	ESW398M6R3AL4(1)
6.3	8	3900	18 x 16	22	2210	245.7	ESW398M6R3AN6(1)
6.3	8	4700	13 x 30	22	2650	296.1	ESW478M6R3AL8(1)
6.3	8	5600	13 x 35	22	2880	352.8	ESW568M6R3AL6(1)
6.3	8	5600	16 x 20	22	2530	352.8	ESW568M6R3AM5(1)
6.3	8	6800	13 x 40	22	3350	428.4	ESW688M6R3AL7(1)
6.3	8	6800	16 x 25	22	2930	428.4	ESW688M6R3AM7(1)
6.3	8	6800	18 x 20	22	2860	428.4	ESW688M6R3AN4(1)
6.3	8	8200	16 x 32	22	3450	516.6	ESW828M6R3AM2(1)
6.3	8	10000	16 x 36	22	3610	630.0	ESW109M6R3AM3(1)
6.3	8	10000	18 x 25	22	3140	630.0	ESW109M6R3AN5(1)
6.3	8	12000	18 x 32	22	4170	756.0	ESW129M6R3AN1(1)
6.3	8	15000	18 x 36	22	4220	945.0	ESW159M6R3AN2(1)
10	13	100	5 x 11	19	210	10.0	ESW107M010AC3(1)
10	13	220	6.3 x 11	19	340	22.0	ESW227M010AE3(1)
10	13	470	8 x 11	19	640	47.0	ESW477M010AG3(1)
10	13	680	8 x 15	19	840	68.0	ESW687M010AG4(1)
10	13	820	10 x 12.5	19	865	82.0	ESW827M010AH9(1)
10	13	1000	8 x 20	19	1050	100.0	ESW108M010AG6(1)
10	13	1000	10 x 16	19	1210	100.0	ESW108M010AH8(1)
10	13	1200	10 x 20	19	1400	120.0	ESW128M010AH4(1)
10	13	1500	10 x 25	19	1650	150.0	ESW158M010AH5(1)
10	13	1500	13 x 16	19	1450	150.0	ESW158M010AL2(1)
10	13	2200	10 x 30	19	1910	220.0	ESW228M010AH6(1)
10	13	2200	13 x 20	19	1900	220.0	ESW228M010AL3(1)
10	13	2200	16 x 16	19	1940	220.0	ESW228M010AM8(1)
10	13	2700	18 x 16	19	2210	270.0	ESW278M010AN6(1)
10	13	3300	10 x 30	19	1910	330.0	ESW338M010AH6(1)
10	13	3300	13 x 25	19	2230	330.0	ESW338M010AL4(1)
10	13	3900	13 x 30	19	2650	390.0	ESW398M010AL8(1)
10	13	3900	16 x 20	19	2530	390.0	ESW398M010AM5(1)
10	13	4700	13 x 35	19	2880	470.0	ESW478M010AL6(1)
10	13	5600	13 x 40	19	3350	560.0	ESW568M010AL7(1)
10	13	5600	16 x 25	19	2930	560.0	ESW568M010AM7(1)
10	13	5600	18 x 20	19	2860	560.0	ESW568M010AN4(1)
10	13	6800	16 x 32	19	2450	680.0	ESW688M010AM2(1)
10	13	6800	18 x 25	19	3140	680.0	ESW688M010AN5(1)
10	13	8200	16 x 36	19	3610	820.0	ESW828M010AM3(1)
VDC	**VDC Surge**	**Rated Capacitance**	**Case Size**	**DF**	**RC**	**LC**	**Part Number**

(1) Insert packaging code. See Ordering Options Table for available options.

[1] When capacitance exceeds 1,000 µF, the DF value (%) is increased by 2% for every additional 1,000 µF.

** Dimension is down size, Endurance will be less 1,000 hours than standard.*

Downloaded from Arrow.com.

Table 1 – Ratings & Part Number Reference cont.

VDC	VDC Surge Voltage	Rated Capacitance 120 Hz 20°C (µF)	Case Size D x L (mm)	DF 120 Hz 20°C (tan δ %)[1]	RC 100 kHz 105°C (mA)	LC 20°C 2 Minutes (µA)	Part Number
10	13	8200	18 x 32	19	4170	820.0	ESW828M010AN1(1)
10	13	10000	16 x 40	19	4080	1000.0	ESW109M010AM4(1)
10	13	10000	18 x 36	19	4220	1000.0	ESW109M010AN2(1)
10	13	15000	18 x 40	19	4280	1500.0	ESW159M010AN3(1)
16	20	56	5 x 11	16	210	9.0	ESW566M016AC3(1)
16	20	100	6.3 x 11	16	250	16.0	ESW107M016AE3(1)
16	20	120	6.3 x 11	16	340	19.2	ESW127M016AE3(1)
16	20	220	6.3 x 11	16	469	35.2	ESW227M016AE3(1)
16	20	220	8 x 11	16	582	35.2	ESW227M016AG3(1)
16	20	330	8 x 11	16	640	52.8	ESW337M016AG3(1)
16	20	470	*8 x 15	16	840	75.2	ESW477M016AG4(1)
16	20	470	8 x 20	16	950	75.2	ESW477M016AG6(1)
16	20	470	*10 x 12.5	16	865	75.2	ESW477M016AH9(1)
16	20	470	10 x 16	16	1210	75.2	ESW477M016AH8(1)
16	20	680	8 x 20	16	1050	108.8	ESW687M016AG6(1)
16	20	680	10 x 16	16	1210	108.8	ESW687M016AH8(1)
16	20	1000	8 x 20	16	1050	160.0	ESW108M016AG6(1)
16	20	1000	*10 x 16	16	1210	160.0	ESW108M016AH8(1)
16	20	1000	10 x 20	16	1400	160.0	ESW108M016AH4(1)
16	20	1000	13 x 16	16	1450	160.0	ESW108M016AL2(1)
16	20	1200	10 x 25	16	1650	192.0	ESW128M016AH5(1)
16	20	1500	10 x 30	16	1910	240.0	ESW158M016AH6(1)
16	20	1500	13 x 20	16	1900	240.0	ESW158M016AL3(1)
16	20	1500	16 x 16	16	1940	240.0	ESW158M016AM8(1)
16	20	2200	13 x 25	16	2230	352.0	ESW228M016AL4(1)
16	20	2200	18 x 16	16	2210	352.0	ESW228M016AN6(1)
16	20	2700	13 x 30	16	2650	432.0	ESW278M016AL8(1)
16	20	2700	16 x 20	16	2530	432.0	ESW278M016AM5(1)
16	20	3300	13 x 35	16	2880	528.0	ESW338M016AL6(1)
16	20	3900	13 x 40	16	3350	624.0	ESW398M016AL7(1)
16	20	3900	16 x 25	16	2930	624.0	ESW398M016AM7(1)
16	20	3900	18 x 20	16	2860	624.0	ESW398M016AN4(1)
16	20	4700	16 x 32	16	3450	752.0	ESW478M016AM2(1)
16	20	4700	18 x 25	16	3140	752.0	ESW478M016AN5(1)
16	20	5600	16 x 36	16	3610	896.0	ESW568M016AM3(1)
16	20	5600	18 x 32	16	4170	896.0	ESW568M016AN1(1)
16	20	6800	16 x 40	16	4080	1088.0	ESW688M016AM4(1)
16	20	8200	18 x 36	16	4220	1312.0	ESW828M016AN2(1)
16	20	10000	18 x 40	16	4280	1600.0	ESW109M016AN3(1)
25	32	47	5 x 11	14	210	11.8	ESW476M025AC3(1)
25	32	100	6.3 x 11	14	340	25.0	ESW107M025AE3(1)
25	32	150	8 x 11	14	640	37.5	ESW157M025AG3(1)
25	32	220	8 x 11	14	640	55.0	ESW227M025AG3(1)
25	32	330	8 x 15	14	840	82.5	ESW337M025AG4(1)
25	32	330	10 x 12.5	14	865	82.5	ESW337M025AH9(1)
25	32	470	8 x 20	14	1050	117.5	ESW477M025AG6(1)
25	32	470	*10 x 12.5	14	1050	117.5	ESW477M025AH9(1)
25	32	470	10 x 16	14	1210	117.5	ESW477M025AH8(1)
25	32	680	10 x 20	14	1400	170.0	ESW687M025AH4(1)
25	32	680	13 x 16	14	1450	170.0	ESW687M025AL2(1)
25	32	820	10 x 25	14	1650	205.0	ESW827M025AH5(1)
25	32	1000	10 x 30	14	1910	250.0	ESW108M025AH6(1)
25	32	1000	13 x 20	14	1900	250.0	ESW108M025AL3(1)
25	32	1000	16 x 16	14	1940	250.0	ESW108M025AM8(1)
25	32	1200	18 x 16	14	2210	300.0	ESW128M025AN6(1)
25	32	1500	*13 x 20	14	1900	375.0	ESW158M025AL3(1)
VDC	**VDC Surge**	**Rated Capacitance**	**Case Size**	**DF**	**RC**	**LC**	**Part Number**

(1) Insert packaging code. See Ordering Options Table for available options.

[1] When capacitance exceeds 1,000 µF, the DF value (%) is increased by 2% for every additional 1,000 µF.

** Dimension is down size, Endurance will be less 1,000 hours than standard.*

Downloaded from Arrow.com.

Table 1 – Ratings & Part Number Reference cont.

VDC	VDC Surge Voltage	Rated Capacitance 120 Hz 20°C (µF)	Case Size D x L (mm)	DF 120 Hz 20°C (tan δ %)[1]	RC 100 kHz 105°C (mA)	LC 20°C 2 Minutes (µA)	Part Number
25	32	1500	13 x 25	14	2230	375.0	ESW158M025AL4(1)
25	32	1800	13 x 30	14	2650	450.0	ESW188M025AL8(1)
25	32	1800	16 x 20	14	2530	450.0	ESW188M025AM5(1)
25	32	2200	13 x 35	14	2880	550.0	ESW228M025AL6(1)
25	32	2200	18 x 20	14	2860	550.0	ESW228M025AN4(1)
25	32	2700	13 x 40	14	3350	675.0	ESW278M025AL7(1)
25	32	2700	16 x 25	14	2930	675.0	ESW278M025AM7(1)
25	32	3300	16 x 32	14	3450	825.0	ESW338M025AM2(1)
25	32	3300	18 x 25	14	3140	825.0	ESW338M025AN5(1)
25	32	3900	18 x 32	14	4170	975.0	ESW398M025AN1(1)
25	32	4700	18 x 36	14	4220	1175.0	ESW478M025AN2(1)
25	32	6800	18 x 40	14	4280	1700.0	ESW688M025AN3(1)
35	44	4.7	5 x 11	12	95	3.0	ESW475M035AC3(1)
35	44	10	5 x 11	12	130	3.5	ESW106M035AC3(1)
35	44	33	5 x 11	12	210	11.6	ESW336M035AC3(1)
35	44	47	6.3 x 11	12	275	16.5	ESW476M035AE3(1)
35	44	56	6.3 x 11	12	340	19.6	ESW566M035AE3(1)
35	44	68	6.3 x 15	12	500	23.8	ESW686M035AE4(1)
35	44	82	6.3 x 15	12	540	28.7	ESW826M035AE4(1)
35	44	100	8 x 11	12	580	35.0	ESW107M035AG3(1)
35	44	150	8 x 11	12	640	52.5	ESW157M035AG3(1)
35	44	220	*8 x 15	12	840	77.0	ESW227M035AG4(1)
35	44	220	10 x 12.5	12	865	77.0	ESW227M035AH9(1)
35	44	270	8 x 20	12	1050	94.5	ESW277M035AG6(1)
35	44	330	*10 x 16	12	1210	115.5	ESW337M035AH8(1)
35	44	330	10 x 20	12	1400	115.5	ESW337M035AH4(1)
35	44	470	10 x 20	12	1400	164.5	ESW477M035AH4(1)
35	44	470	13 x 16	12	1450	164.5	ESW477M035AL2(1)
35	44	560	10 x 25	12	1650	196.0	ESW567M035AH5(1)
35	44	680	10 x 30	12	1910	238.0	ESW687M035AH6(1)
35	44	680	13 x 20	12	1900	238.0	ESW687M035AL3(1)
35	44	680	16 x 16	12	1940	238.0	ESW687M035AM8(1)
35	44	820	13 x 20	12	1900	287.0	ESW827M035AL3(1)
35	44	1000	13 x 25	12	2230	350.0	ESW108M035AL4(1)
35	44	1000	18 x 16	12	2210	350.0	ESW108M035AN6(1)
35	44	1200	13 x 30	12	2650	420.0	ESW128M035AL8(1)
35	44	1200	16 x 20	12	2530	420.0	ESW128M035AM5(1)
35	44	1500	13 x 35	12	2880	525.0	ESW158M035AL6(1)
35	44	1800	13 x 40	12	3350	630.0	ESW188M035AL7(1)
35	44	1800	16 x 25	12	2930	630.0	ESW188M035AM7(1)
35	44	1800	18 x 20	12	2860	630.0	ESW188M035AN4(1)
35	44	2200	16 x 32	12	3450	770.0	ESW228M035AM2(1)
35	44	2200	18 x 25	12	3140	770.0	ESW228M035AN5(1)
35	44	2700	16 x 36	12	3610	945.0	ESW278M035AM3(1)
35	44	2700	18 x 32	12	4170	945.0	ESW278M035AN1(1)
35	44	3300	16 x 40	12	4080	1155.0	ESW338M035AM4(1)
35	44	3300	18 x 36	12	4220	1155.0	ESW338M035AN2(1)
35	44	4700	18 x 40	12	4280	1645.0	ESW478M035AN3(1)
50	63	2.2	5 x 11	10	85	3.0	ESW225M050AC3(1)
50	63	4.7	5 x 11	10	100	3.0	ESW475M050AC3(1)
50	63	10	5 x 11	10	135	5.0	ESW106M050AC3(1)
50	63	22	5 x 11	10	180	11.0	ESW226M050AC3(1)
50	63	33	6.3 x 11	10	245	16.5	ESW336M050AE3(1)
50	63	47	6.3 x 11	10	300	23.5	ESW476M050AE3(1)
50	63	56	6.3 x 15	10	295	28.0	ESW566M050AE4(1)
50	63	100	8 x 11	10	555	50.0	ESW107M050AG3(1)
VDC	**VDC Surge**	**Rated Capacitance**	**Case Size**	**DF**	**RC**	**LC**	**Part Number**

(1) Insert packaging code. See Ordering Options Table for available options.

[1] When capacitance exceeds 1,000 µF, the DF value (%) is increased by 2% for every additional 1,000 µF.

** Dimension is down size, Endurance will be less 1,000 hours than standard.*

Downloaded from Arrow.com.

Table 1 – Ratings & Part Number Reference cont.

VDC	VDC Surge Voltage	Rated Capacitance 120 Hz 20°C (µF)	Case Size D x L (mm)	DF 120 Hz 20°C (tan δ %)[1]	RC 100 kHz 105°C (mA)	LC 20°C 2 Minutes (µA)	Part Number
50	63	120	8 x 15	10	730	60.0	ESW127M050AG4(1)
50	63	150	10 x 12.5	10	760	75.0	ESW157M050AH9(1)
50	63	180	8 x 20	10	910	90.0	ESW187M050AG6(1)
50	63	220	10 x 16	10	1050	110.0	ESW227M050AH8(1)
50	63	270	10 x 20	10	1220	135.0	ESW277M050AH4(1)
50	63	270	13 x 16	10	1260	135.0	ESW277M050AL2(1)
50	63	330	*10 x 20	10	1400	165.0	ESW337M050AH4(1)
50	63	330	10 x 25	10	1440	165.0	ESW337M050AH5(1)
50	63	470	10 x 30	10	1690	235.0	ESW477M050AH6(1)
50	63	470	13 x 20	10	1660	235.0	ESW477M050AL3(1)
50	63	470	16 x 16	10	1690	235.0	ESW477M050AM8(1)
50	63	560	13 x 25	10	1950	280.0	ESW567M050AL4(1)
50	63	560	18 x 16	10	1930	280.0	ESW567M050AN6(1)
50	63	680	13 x 30	10	2310	340.0	ESW687M050AL8(1)
50	63	820	13 x 35	10	2510	410.0	ESW827M050AL6(1)
50	63	820	16 x 20	10	2210	410.0	ESW827M050AM5(1)
50	63	1000	13 x 40	10	2920	500.0	ESW108M050AL7(1)
50	63	1000	16 x 25	10	2555	500.0	ESW108M050AM7(1)
50	63	1000	18 x 20	10	2490	500.0	ESW108M050AN4(1)
50	63	1200	16 x 32	10	3010	600.0	ESW128M050AM2(1)
50	63	1200	18 x 25	10	2740	600.0	ESW128M050AN5(1)
50	63	1500	16 x 36	10	3150	750.0	ESW158M050AM3(1)
50	63	1800	16 x 40	10	3710	900.0	ESW188M050AM4(1)
50	63	1800	18 x 32	10	3635	900.0	ESW188M050AN1(1)
50	63	2200	18 x 36	10	3680	1100.0	ESW228M050AN2(1)
63	79	15	5 x 11	9	55	9.5	ESW156M063AC3(1)
63	79	33	6.3 x 11	9	115	20.8	ESW336M063AE3(1)
63	79	56	8 x 12	9	232	35.3	ESW566M063AG9(1)
63	79	82	8 x 15	9	300	51.7	ESW826M063AG4(1)
63	79	82	10 x 12.5	9	288	51.7	ESW826M063AH9(1)
63	79	120	8 x 20	9	362	75.6	ESW127M063AG6(1)
63	79	120	10 x 16	9	357	75.6	ESW127M063AH8(1)
63	79	180	10 x 20	9	466	113.4	ESW187M063AH4(1)
63	79	180	13 x 16	9	466	113.4	ESW187M063AL2(1)
63	79	220	10 x 25	9	531	138.6	ESW227M063AH5(1)
63	79	270	10 x 30	9	663	170.1	ESW277M063AH6(1)
63	79	270	13 x 20	9	690	170.1	ESW277M063AL3(1)
63	79	270	16 x 16	9	795	170.1	ESW277M063AM8(1)
63	79	330	13 x 25	9	784	207.9	ESW337M063AL4(1)
63	79	390	18 x 16	9	920	245.7	ESW397M063AN6(1)
63	79	470	13 x 30	9	905	296.1	ESW477M063AL8(1)
63	79	470	16 x 20	9	1040	296.1	ESW477M063AM5(1)
63	79	560	13 x 35	9	1050	352.8	ESW567M063AL6(1)
63	79	560	16 x 25	9	1250	352.8	ESW567M063AM7(1)
63	79	680	13 x 40	9	1180	428.4	ESW687M063AL7(1)
63	79	680	18 x 20	9	1240	428.4	ESW687M063AN4(1)
63	79	820	16 x 32	9	1570	516.6	ESW827M063AM2(1)
63	79	820	18 x 25	9	1490	516.6	ESW827M063AN5(1)
63	79	1000	16 x 36	9	1790	630.0	ESW108M063AM3(1)
63	79	1000	18 x 32	9	1630	630.0	ESW108M063AN1(1)
63	79	1200	18 x 32	9	2020	756.0	ESW128M063AN1(1)
100	125	6.8	5 x 11	8	55	6.8	ESW685M100AC3(1)
100	125	15	6.3 x 11	8	115	15.0	ESW156M100AE3(1)
100	125	27	8 x 12	8	232	27.0	ESW276M100AG9(1)
100	125	39	8 x 15	8	300	39.0	ESW396M100AG4(1)
100	125	47	10 x 12.5	8	288	47.0	ESW476M100AH9(1)
VDC	**VDC Surge**	**Rated Capacitance**	**Case Size**	**DF**	**RC**	**LC**	**Part Number**

(1) Insert packaging code. See Ordering Options Table for available options.

[1] When capacitance exceeds 1,000 µF, the DF value (%) is increased by 2% for every additional 1,000 µF.

** Dimension is down size, Endurance will be less 1,000 hours than standard.*

Downloaded from Arrow.com.

Table 1 – Ratings & Part Number Reference cont.

VDC	VDC Surge Voltage	Rated Capacitance 120 Hz 20°C (µF)	Case Size D x L (mm)	DF 120 Hz 20°C (tan δ %)[1]	RC 100 kHz 105°C (mA)	LC 20°C 2 Minutes (µA)	Part Number
100	125	56	8 x 20	8	362	56.0	ESW566M100AG6(1)
100	125	68	10 x 16	8	357	68.0	ESW686M100AH8(1)
100	125	82	10 x 20	8	466	82.0	ESW826M100AH4(1)
100	125	82	13 x 16	8	466	82.0	ESW826M100AL2(1)
100	125	100	10 x 25	8	531	100.0	ESW107M100AH5(1)
100	125	120	10 x 30	8	663	120.0	ESW127M100AH6(1)
100	125	120	13 x 20	8	690	120.0	ESW127M100AL3(1)
100	125	150	16 x 16	8	795	150.0	ESW157M100AM8(1)
100	125	180	13 x 25	8	784	180.0	ESW187M100AL4(1)
100	125	180	18 x 16	8	920	180.0	ESW187M100AN6(1)
100	125	220	13 x 30	8	905	220.0	ESW227M100AL8(1)
100	125	220	16 x 20	8	1040	220.0	ESW227M100AM5(1)
100	125	270	13 x 35	8	1050	270.0	ESW277M100AL6(1)
100	125	270	16 x 25	8	1250	270.0	ESW277M100AM7(1)
100	125	330	13 x 40	8	1180	330.0	ESW337M100AL7(1)
100	125	330	18 x 20	8	1240	330.0	ESW337M100AN4(1)
100	125	390	16 x 32	8	1570	390.0	ESW397M100AM2(1)
100	125	390	18 x 25	8	1490	390.0	ESW397M100AN5(1)
100	125	470	16 x 36	8	1790	470.0	ESW477M100AM3(1)
100	125	470	18 x 32	8	1630	470.0	ESW477M100AN1(1)
100	125	560	16 x 40	8	2020	560.0	ESW567M100AM4(1)
100	125	680	18 x 36	8	1790	680.0	ESW687M100AN2(1)
100	125	820	18 x 40	8	2330	820.0	ESW827M100AN3(1)
VDC	**VDC Surge**	**Rated Capacitance**	**Case Size**	**DF**	**RC**	**LC**	**Part Number**

(1) Insert packaging code. See Ordering Options Table for available options.
[1] When capacitance exceeds 1,000 µF, the DF value (%) is increased by 2% for every additional 1,000 µF.
** Dimension is down size, Endurance will be less 1,000 hours than standard.*

Downloaded from Arrow.com.

Mounting Positions (Safety Vent)

In operation, electrolytic capacitors will always conduct a leakage current, which causes electrolysis. The oxygen produced by electrolysis will regenerate the dielectric layer but, at the same time, the hydrogen released may cause the internal pressure of the capacitor to increase. The overpressure vent, or safety vent, ensures that the gas can escape when the pressure reaches a certain value. All mounting positions must allow the safety vent to work properly.

Installing

- As a general principle, lower-use temperatures result in a longer, useful life of the capacitor. For this reason, it should be ensured that electrolytic capacitors are placed away from heat-emitting components. Adequate space should be allowed between components for cooling air to circulate, particularly when high ripple current loads are applied. In any case, the maximum category temperature must not be exceeded.
- Do not deform the case of the capacitors or use capacitors with a deformed case.
- Verify that the connections of the capacitors are able to insert on the board without excessive mechanical force.
- If the capacitors require mounting through additional means, the recommended mounting accessories shall be used.
- Verify the correct polarization of the capacitor on the board.
- Verify that the space around the pressure relief device is according to the following guideline:

Case Diameter	Space Around Safety Vent
≤ 16 mm	> 2 mm
> 16 to ≤ 40 mm	> 3 mm
> 40 mm	> 5 mm

It is recommended that capacitors always be mounted with the safety device uppermost or in the upper part of the capacitor.

- If the capacitors are stored for a long time, the leakage current must be verified. If the leakage current is superior to the value listed in this catalog, the capacitors must be reformed. In this case, they can be reformed by application of the rated voltage through a series resistor approximately 1 kΩ for capacitors with V_R ≤ 160 V (5 W resistor) and 10 kΩ for the other rated voltages.
- In the case of capacitors connected in a series, a suitable voltage sharing must be used.
  In the case of balancing resistors, the approximate resistance value can be calculated as: R = 60/C.

KEMET recommends, nevertheless, to ensure that the voltage across each capacitor does not exceed its rated voltage.

Downloaded from Arrow.com.

Application & Operation Guidelines

Electrical Ratings:
Capacitance (ESC)

Simplified equivalent circuit diagram of an electrolytic capacitor

The capacitive component of the equivalent series circuit, (equivalent series capacitance - ESC), is determined by applying an alternate voltage of ≤ 0.5 V at a frequency of 120 or 100 Hz and 20°C (IEC 384-1, 384-4).

Temperature Dependence of the Capacitance
Capacitance of an electrolytic capacitor depends upon temperature: with decreasing temperature the viscosity of the electrolyte increases, thereby reducing its conductivity.
Capacitance will decrease if temperature decreases. Furthermore, temperature drifts cause armature dilatation and, therefore, capacitance changes (up to 20% depending on the series considered, from 0 to 80°C). This phenomenon is more evident for electrolytic capacitors than for other types.

Frequency Dependence of the Capacitance
Effective capacitance value is derived from the impedance curve, as long as impedance is still in the range where the capacitance component is dominant.

$$C = \frac{1}{2\pi f Z}$$

C = capacitance (F)
f = frequency (Hz)
Z = impedance (Ω)

Dissipation Factor tan δ (DF)
Dissipation Factor tan δ is the ratio between the active and reactive power for a sinusoidal waveform voltage. It can be thought of as a measurement of the gap between an actual and ideal capacitor.

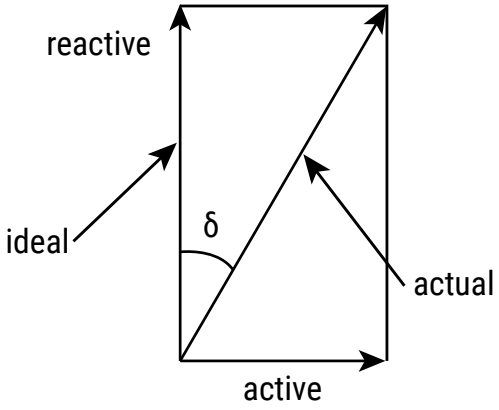

Tan δ is measured with the same set-up used for the series capacitance ESC.
Tan δ = ω x ESC x ESR where:
ESC = Equivalent series capacitance
ESR = Equivalent series resistance

Downloaded from Arrow.com.

Application & Operation Guidelines cont.

Equivalent Series Inductance (ESL)
Equivalent series inductance or self inductance results from the terminal configuration and internal design of the capacitor.

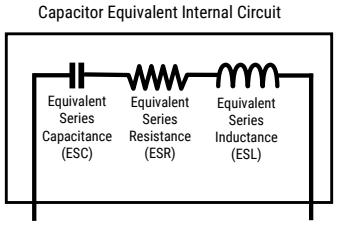

Equivalent Series Resistance (ESR)
Equivalent series resistance is the resistive component of the equivalent series circuit. ESR value depends on frequency and temperature, and is related to the tan δ by the following equation:

$$ESR = \frac{\tan \delta}{2\pi f\ ESC}$$

ESR = Equivalent series resistance (Ω)
tan δ = Dissipation factor
ESC = Equivalent series capacitance (F)
f = Frequency (Hz)

Tolerance limits of the rated capacitance must be taken into account when calculating this value.

Impedance (Z)
Impedance of an electrolytic capacitor results from a circuit formed by the following individual equivalent series components:

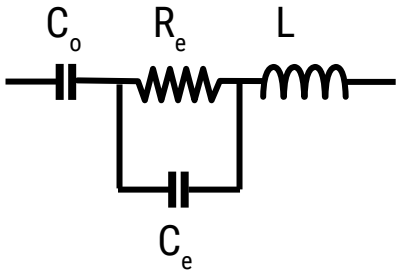

C_o = Aluminum oxide capacitance (surface and thickness of the dielectric.)
R_e = Resistance of electrolyte and paper mixture (other resistances not depending on the frequency are not considered: tabs, plates, etc.)
C_e = Electrolyte soaked paper capacitance.
L = Inductive reactance of the capacitor winding and terminals.
Impedance of an electrolytic capacitor is not a constant quantity that retains its value under all conditions; it changes depending on frequency and temperature.
Impedance as a function of frequency (sinusoidal waveform) for a certain temperature can be represented as follows:

Downloaded from Arrow.com.

Application & Operation Guidelines cont.

Impedance (Z) cont.

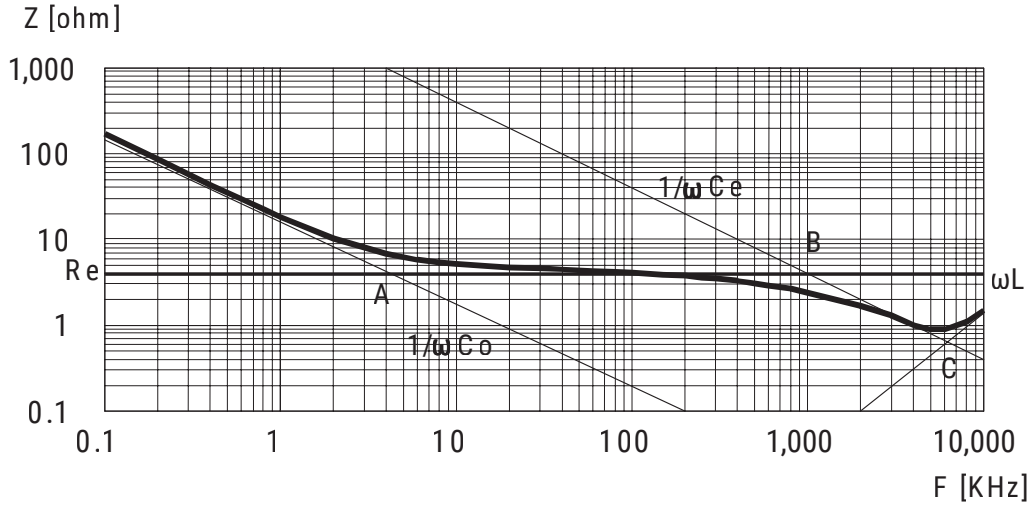

- Capacitive reactance predominates at low frequencies.
- With increasing frequency, capacitive reactance $Xc = 1/\omega C_o$ decreases until it reaches the order of magnitude of electrolyte resistance R_e(A)
- At even higher frequencies, resistance of the electrolyte predominates: $Z = R_e$ (A - B)
- When the capacitor's resonance frequency is reached (ω_0), capacitive and inductive reactance mutually cancel each other $1/\omega C_e = \omega L$, $\omega_0 = 1/SQR(LC_e)$
- Above this frequency, inductive reactance of the winding and its terminals (XL = Z = ωL) becomes effective and leads to an increase in impedance

Generally speaking, it can be estimated that $C_e \approx 0.01\ C_o$.

Impedance as a function of frequency (sinusoidal waveform) for different temperature values can be represented as follows (typical values):

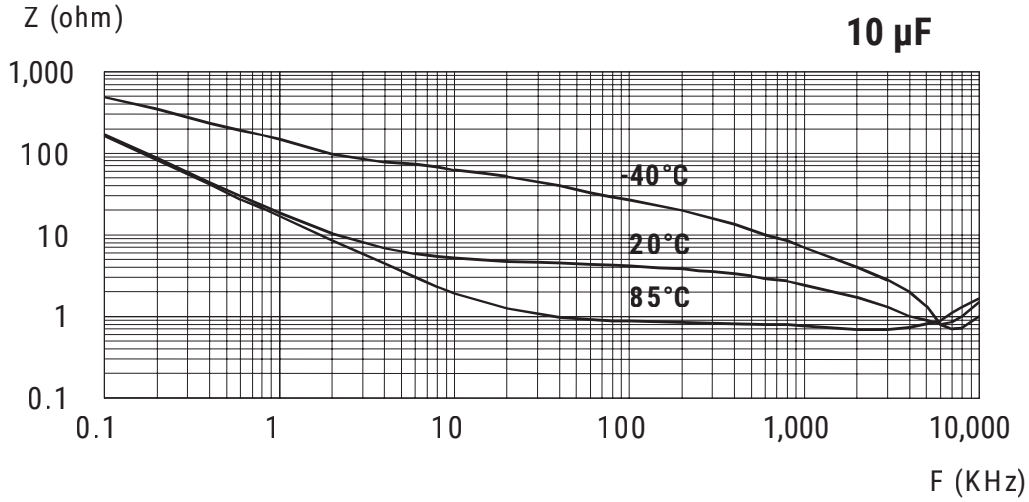

R_e is the most temperature-dependent component of an electrolytic capacitor equivalent circuit. Electrolyte resistivity will decrease if temperature rises.
In order to obtain a low impedance value throughout the temperature range, R_e must be as little as possible. However, R_e values that are too low indicate a very aggressive electrolyte, resulting in a shorter life of the electrolytic capacitor at high temperatures. A compromise must be reached.

Downloaded from Arrow.com.

Application & Operation Guidelines cont.

Leakage Current (LC)
Due to the aluminum oxide layer that serves as a dielectric, a small current will continue to flow even after a DC voltage has been applied for long periods. This current is called leakage current.

A high leakage current flows after applying voltage to the capacitor then decreases in a few minutes, for example, after prolonged storage without any applied voltage. In the course of continuous operation, the leakage current will decrease and reach an almost constant value.

After a voltage-free storage the oxide layer may deteriorate, especially at a high temperature. Since there are no leakage currents to transport oxygen ions to the anode, the oxide layer is not regenerated. The result is that a higher than normal leakage current will flow when voltage is applied after prolonged storage.

As the oxide layer is regenerated in use, the leakage current will gradually decrease to its normal level.
The relationship between the leakage current and voltage applied at constant temperature can be shown schematically as follows:

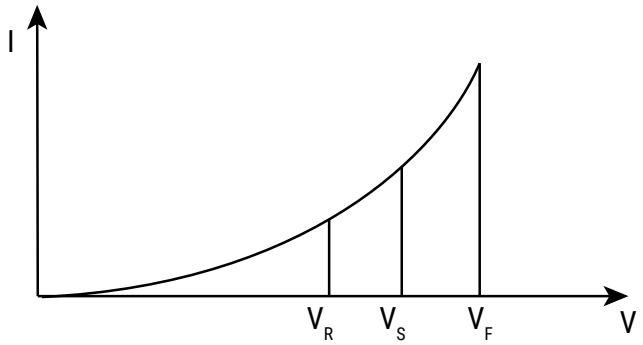

Where:
V_F = Forming voltage
If this level is exceeded, a large quantity of heat and gas will be generated and the capacitor could be damaged.
V_R = Rated voltage
This level represents the top of the linear part of the curve.
V_S = Surge voltage
This lies between V_R and V_F. The capacitor can be subjected to V_S for short periods only.

Electrolytic capacitors are subjected to a reforming process before acceptance testing. The purpose of this preconditioning is to ensure that the same initial conditions are maintained when comparing different products.

Ripple Current (RC)
The maximum ripple current value depends on:
- Ambient temperature
- Surface area of the capacitor (heat dissipation area)
tan δ or ESR
- Frequency

The capacitor's life depends on the thermal stress.

Downloaded from Arrow.com.

Application & Operation Guidelines cont.

Frequency Dependence of the Ripple Current
ESR and, thus, the tan δ depend on the frequency of the applied voltage. This indicates that the allowed ripple current is also a function of the frequency.

Temperature Dependence of the Ripple Current
The data sheet specifies maximum ripple current at the upper category temperature for each capacitor.

Expected Life Calculation
Expected life depends on operating temperature according to the following formula: $L = Lo \times 2^{(To-T)/10}$
Where:

L: Expected life
Lo: Load life at a maximum permissible operating temperature
T: Actual operating temperature
To: Maximum permissible operating temperature

This formula is applicable between 40°C and To.

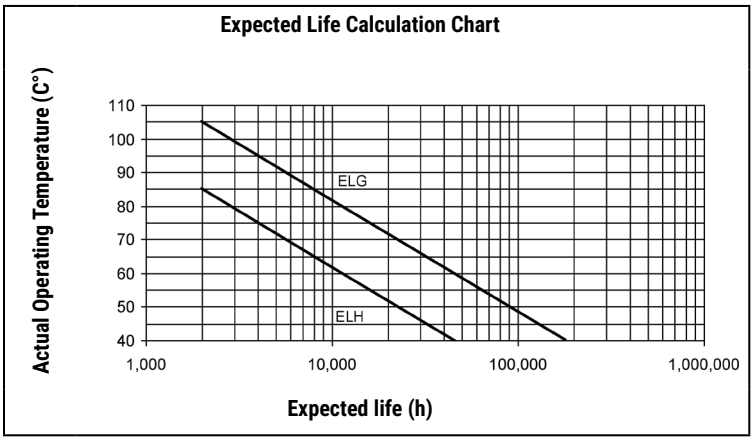

Downloaded from Arrow.com.

Marking

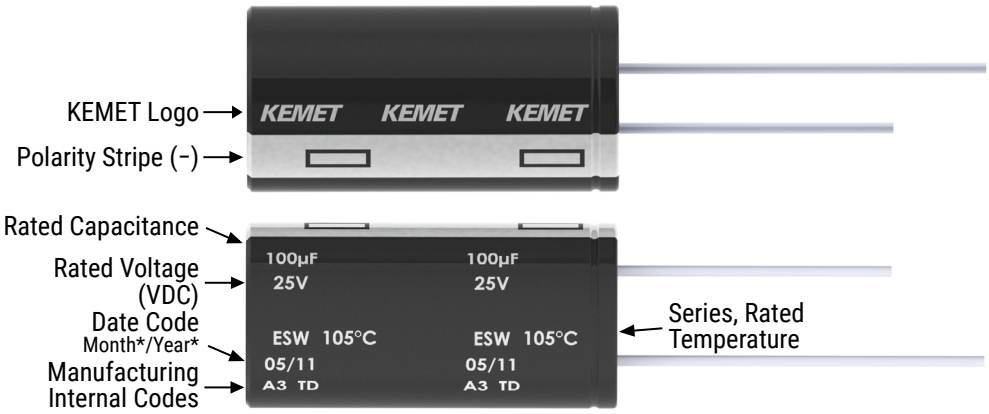

*Y = Year

Code	01	02	03	04	05	06	07	08	09
Year	2011	2012	2013	2014	2015	2016	2017	2018	2019

*M = Month

Code	01	02	03	04	05	06	07	08	09	10	11	12
Month	1	2	3	4	5	6	7	8	9	10	11	12

** Image for reference only. A slight change in the layout can occur, not affecting the marking content. This change will not impact the product's form, fit, or function, as the products remain equivalent in physical, mechanical, quality, and reliability characteristics.

Construction

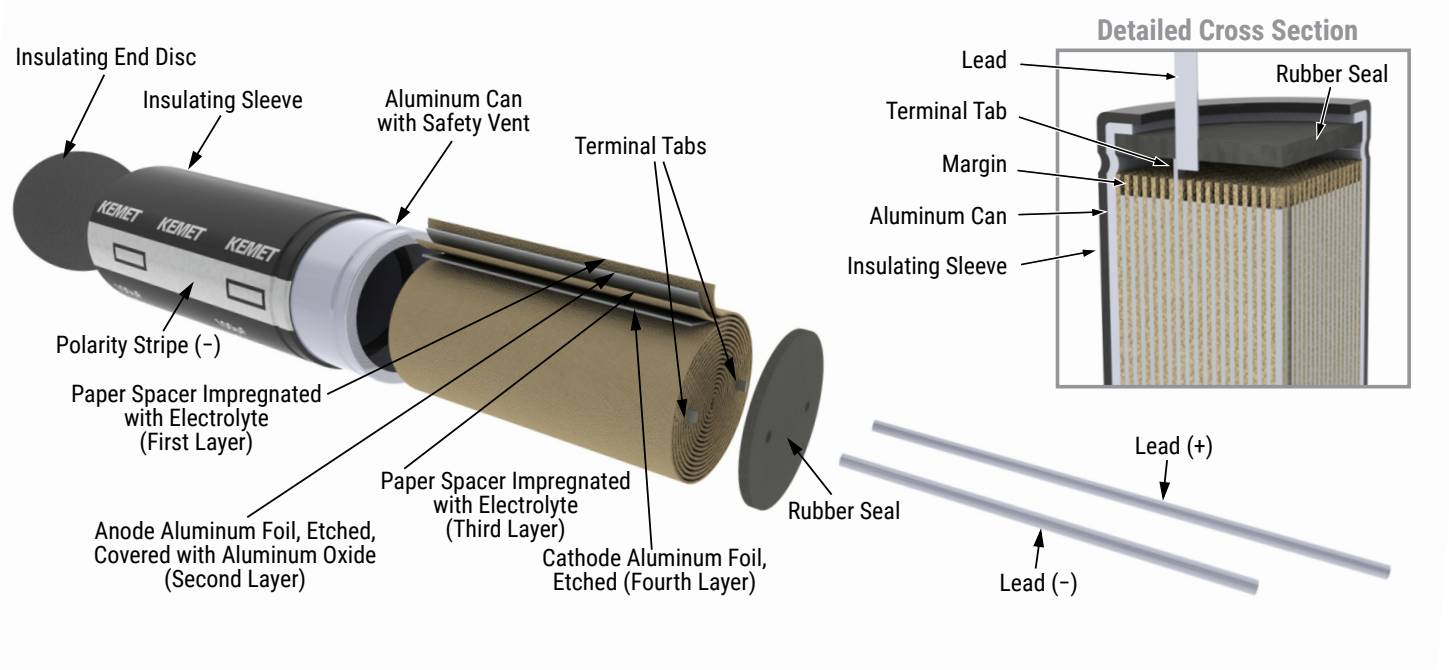

Downloaded from Arrow.com.

Taping for Automatic Insertion Machines

Formed to 2.5 mm
(Lead and packaging code LA and FA)

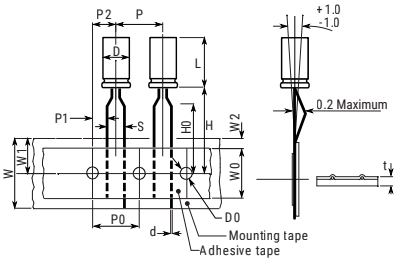

Formed to 5 mm
(Lead and packaging code JA and DA)

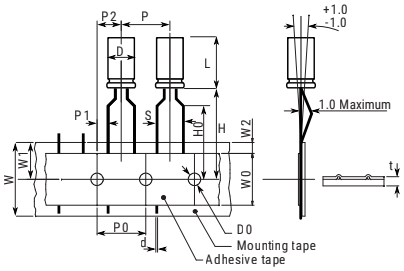

Straight Leads (Diameter: 4 – 8 mm)
Lead and packaging code EA and KA

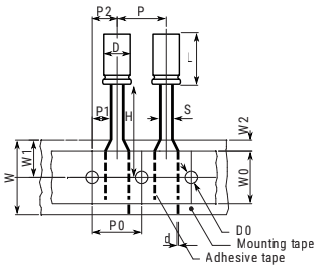

Straight Leads (Diameter > 8)
Lead and packaging code EA and KA

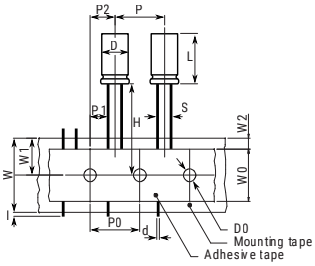

Dimensions (mm)	D	L	S	d	P	P0	P1	P2	W	W0	W1	W2	H0	H1	l	D0	t
Tolerance	**+0.5**		**+0.8/−0.2**	**±0.05**	**±1.0**	**±0.3**	**±0.7**	**±1.3**	**+1/−0.5**	**±0.5**	**Maximum**	**Maximum**	**±0.75**	**±0.5**	**Maximum**	**±0.2**	**±0.2**
Formed to 2.5 mm	4	5 – 7	2.5	0.45	12.7	12.7	5.1	6.35	18	12	11	3	16.0	18.5		4	0.7
	5	≤ 7	2.5	0.45	12.7	12.7	5.1	6.35	18	12	11	3	16.0	18.5		4	0.7
		> 7	2.5	0.50	12.7	12.7	5.1	6.35	18	12	11	3	16.0	18.5		4	0.7
Formed to 5 mm	4	5 – 7	5.0	0.45	12.7	12.7	3.85	6.35	18	12	11	3	16.0	18.5		4	0.7
	5	≤ 7	5.0	0.45	12.7	12.7	3.85	6.35	18	12	11	3	16.0	18.5		4	0.7
		>7	5.0	0.50	12.7	12.7	3.85	6.35	18	12	11	3	16.0	18.5		4	0.7
	6	≤ 7	5.0	0.50	12.7	12.7	3.85	6.35	18	12	11	3	16.0	18.5		4	0.7
		> 7	5.0	0.50	12.7	12.7	3.85	6.35	18	12	11	3	16.0	18.5		4	0.7
	8	≤ 7	5.0	0.50	12.7	12.7	3.85	6.35	18	12	11	3	16.0	18.5		4	0.7
		> 7	5.0	0.50	12.7	12.7	3.85	6.35	18	12	11	3	16.0	18.5		4	0.7
Straight leads	4	5 – 7	1.5	0.45	12.7	12.7	5.6	6.35	18	12	11	3	18.5			4	0.7
	5	≤ 7	2.0	0.45	12.7	12.7	5.35	6.35	18	12	11	3	18.5			4	0.7
		> 7	2.0	0.50	12.7	12.7	5.35	6.35	18	12	11	3	18.5			4	0.7
	6	≤ 7	2.5	0.50	12.7	12.7	5.1	6.35	18	12	11	3	18.5			4	0.7
		> 7	2.5	0.50	12.7	12.7	5.1	6.35	18	12	11	3	18.5			4	0.7
	8	≤ 7	3.5	0.50	12.7	12.7	4.6	6.35	18	12	11	3	18.5			4	0.7
		> 7	3.5	0.50	12.7	12.7	4.6	6.35	18	12	11	3	18.5			4	0.7
	10	≤ 20	5.0	0.60	12.7	12.7	3.85	6.35	18	12	11	3	18.5		1	4	1.0

Downloaded from Arrow.com.

Lead Taping & Packaging

Ammo Box

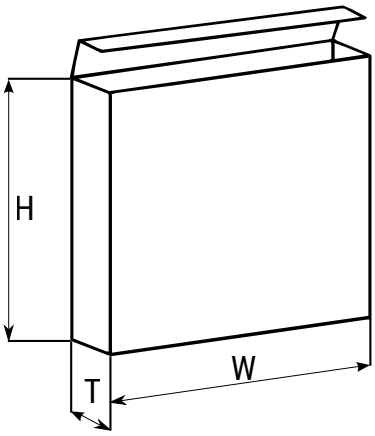

Reel

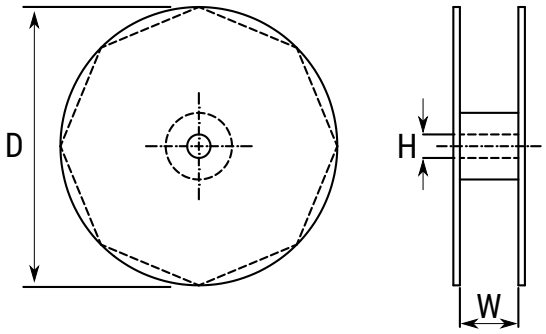

Diameter	Length	Ammo			Reel		
		H	W	T	D	H	W
			Maximum	Maximum	±2	±0.5	+1/−0.1
4	All	230	340	42	350	30	50
5	≤ 7	230	340	42			
5	11	275	340	42			
6.3	≤ 7	235	340	45			
6.3	11	230	340	48			
8	≤ 7	270	340	48			
8	11	235	340	48			
8	>11 ≤ 20	240	340	57			
10	≤ 13	250	340	52			
10	>13 ≤ 20	256	340	57			
10	>20	250	340	60	NA	NA	NA
12	All	270	340	57			
13	All	285	340	62			
16	All	265	340	62			
18	All	288	340	65			

Downloaded from Arrow.com.

Construction Data

The manufacturing process begins with the anode foil being electrochemically etched to increase the surface area and then "formed" to produce the aluminum oxide layer. Both the anode and cathode foils are then interleaved with absorbent paper and wound into a cylinder. During the winding process, aluminum tabs are attached to each foil to provide the electrical contact.

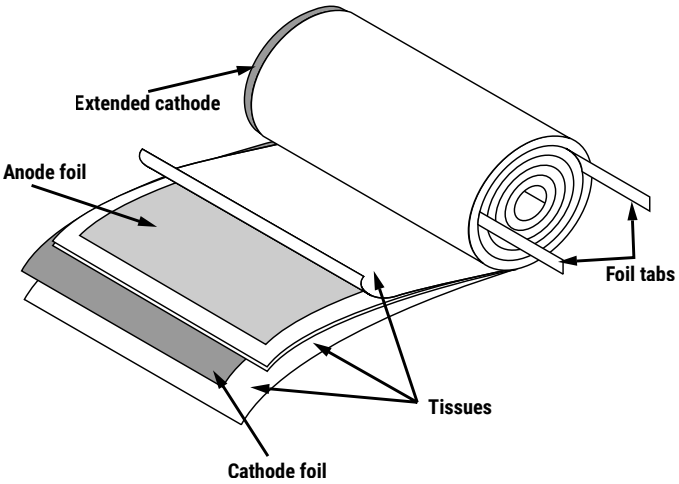

The deck, complete with terminals, is attached to the tabs and then folded down to rest on top of the winding. The complete winding is impregnated with electrolyte before being housed in a suitable container, usually an aluminum can, and sealed. Throughout the process, all materials inside the housing must be maintained at the highest purity and be compatible with the electrolyte.

Each capacitor is aged and tested before being sleeved and packed. The purpose of aging is to repair any damage in the oxide layer and thus reduce the leakage current to a very low level. Aging is normally carried out at the rated temperature of the capacitor and is accomplished by applying voltage to the device while carefully controlling the supply current. The process may take several hours to complete.

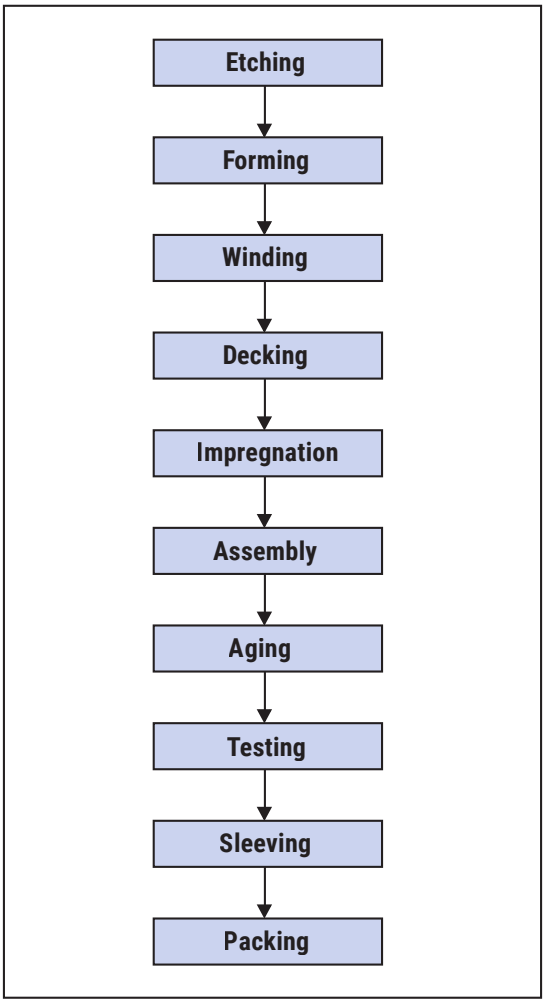

Damage to the oxide layer can occur due to variety of reasons:
- Slitting of the anode foil after forming
- Attaching the tabs to the anode foil
- Minor mechanical damage caused during winding

A sample from each batch is taken by the quality department after completion of the production process. This sample size is controlled by the use of recognized sampling tables defined in BS 6001.

The following tests are applied and may be varied at the request of the customer. In this case the batch, or special procedure, will determine the course of action.

Electrical:
- Leakage current
- Capacitance
- ESR
- Impedance
- Tan Delta

Mechanical/Visual:
- Overall dimensions
- Torque test of mounting stud
- Print detail
- Box labels
- Packaging, including packed quantity

Downloaded from Arrow.com.

KEMET Electronics Corporation Sales Offices

For a complete list of our global sales offices, please visit https://www.yageogroup.com/SalesResources/SalesOffices

Disclaimer

YAGEO Corporation and its affiliates do not recommend the use of commercial or automotive grade products for high reliability applications or manned space flight.

All product specifications, statements, information and data (collectively, the "Information") in this datasheet are subject to change. The customer is responsible for checking and verifying the extent to which the Information contained in this publication is applicable to an order at the time the order is placed. All Information given herein is believed to be accurate and reliable, but it is presented without guarantee, warranty, or responsibility of any kind, expressed or implied.

Statements of suitability for certain applications are based on KEMET Electronics Corporation's ("KEMET") knowledge of typical operating conditions for such applications, but are not intended to constitute – and KEMET specifically disclaims – any warranty concerning suitability for a specific customer application or use. The Information is intended for use only by customers who have the requisite experience and capability to determine the correct products for their application. Any technical advice inferred from this Information or otherwise provided by KEMET with reference to the use of KEMET's products is given gratis, and KEMET assumes no obligation or liability for the advice given or results obtained.

Although KEMET designs and manufactures its products to the most stringent quality and safety standards, given the current state of the art, isolated component failures may still occur. Accordingly, customer applications which require a high degree of reliability or safety should employ suitable designs or other safeguards (such as installation of protective circuitry or redundancies) in order to ensure that the failure of an electrical component does not result in a risk of personal injury or property damage.

Although all product–related warnings, cautions and notes must be observed, the customer should not assume that all safety measures are indicated or that other measures may not be required.

KEMET requires its products to be packaged and shipped on pallets. This is because KEMET's products are specifically designed to be packed onto pallets during shipment. If for any reason, the products are removed from pallets by the shipping party and shipped to the end customer, then additional external protection is required. In this instance, an external box with two carton layers and an upwards orientation sticker must be used by the shipping party, with the empty space filled with filling material, and afterwards sealing the box. If this packing and packaging guideline is not followed by the shipping party, the shipping party, and not KEMET, will be held responsible for any packaging, packing and/or product damages upon delivery of the products to the end customer. KEMET hereby disclaims any liability for damages to the products or otherwise that have been, or threaten to be, inflicted, result from or are in any way related to the packaging, packing or damage by the shipping party in contravention of the packing and packaging guidelines herein.

KEMET is a registered trademark of KEMET Electronics Corporation.

Downloaded from Arrow.com.