ED-EHD

D-Sub connectors - Screw-machined contacts

STANDARD AND HIGH DENSITY WATERPROOF CONNECTORS

CHARACTERISTICS

Materials and Platings	
Shells	Steel, Nickel plated 1.25µm(50µ") min.
Body	Glass-filled thermoplastic Flame retardant to UL94 V-0 Color Black
Contacts	Copper alloy(Brass for plug, Phospher bronze for socket) gold over 1.25µm(50µ") min nickel
Boardlock	Copper alloy, 100µ" min. sn over 50µ" min. nickel.
Standoff	Copper alloy, 100µ" min. sn over 50µ" min. nickel.

Electrical Data	
Current rating	5.0A
Voltage rating	300V rms at 50Hz
Insulation resistance	>5000MΩ
Contact resistance	20mΩ Max.

Climatic Data	
Operating temperature	-55°C to +85°C
Salt spray	48 hours
Waterproof rating	IP 67 minimum

Mechanical Data

Mating and unmating force
Unit: kg (lb)

No. of Cts		ED		EHD	
ED	**EHD**	**Mate (max)**	**Unmate (min)**	**Mate (max)**	**Unmate (min)**
9	15	3.05 (6.74)	0.36 (0.79)	3.81 (8.42)	0.52 (1.14)
15	26	5.09 (11.24)	0.46 (1.01)	5.95 (13.16)	1.05 (2.32)
25	44	8.44 (18.66)	0.81 (1.80)	9.26 (20.46)	1.37 (3.02)

Mating cycles

Gold flash : 100 cycles
0.4µm (15µ") : 200 cycles
0.76µm (30µ") : 500 cycles

DESCRIPTION

The 17ED and 17EHD series are suitable for waterproof applications.

The machined contacts provide robustness and reliability.

This series offers:
- Panel mount connectors with solder cup, straight and right angle PCB terminations.

Connectors are waterproof unmated.

Harsh environment connectors

APPLICATIONS

- Marine electronic devices
- Industrial electrical
- Security Monitoring
- Robotics
- Lighting systems

ED-EHD

Amphenol RoHS Compliant EU 2002/95/EC

Amphenol

Downloaded from Arrow.com.

Termination

Solder cup (blank) :

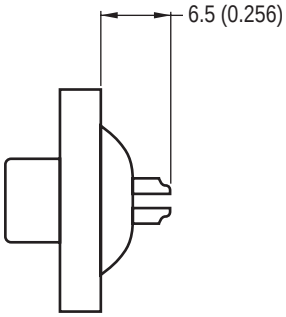

Standard density

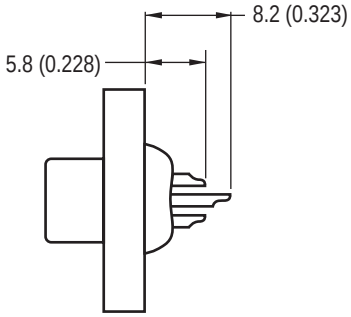

High density

Straight PCB with standoff and boardlocks:

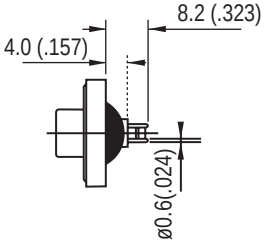

Standard density

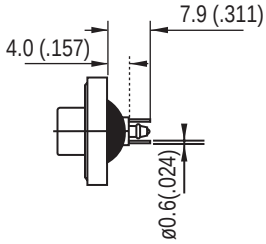

High density

Right angle PCB with brackets and boardlocks:

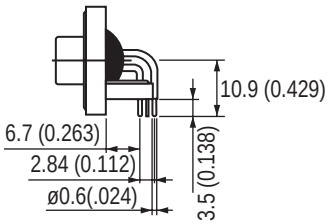

Standard density

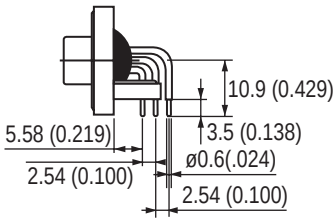

High density

Right angle PCB without brackets and boardlocks:

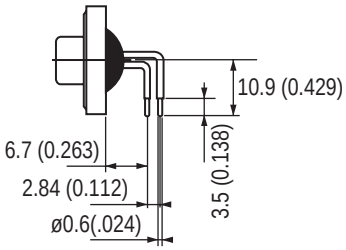

Standard density

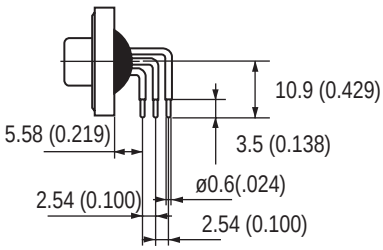

High density

Amphenol

Downloaded from Arrow.com.

Shell Size Dimensions

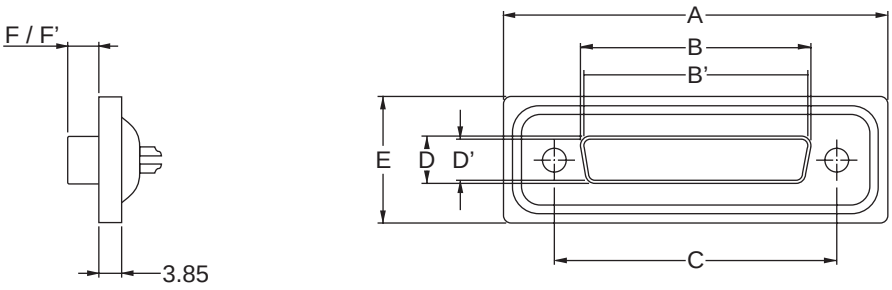

SHELL SIZE	Contact P: pin S: socket	A ±0.25 (±.010)	B 0 / -0.20 (0/-.008	B' +0.20 / 0 (+.008/0)	C ±0.10 (±.004)	D 0 / -0.25 (0/-.010)	D' +0.25 / 0 (+.010/0)	E ±0.25 (±.010)	F +0.10/-0.20 (+.004/-.008)	F' ±0.10 (±.004)
E	P	39.4		16.8(0.661)	25.0		8.2(0.325)	21.0		5.9(0.232)
	S	(1.551)	16.4(0.646)		(0.984)	8.0(0.315)		(0.827)	6.2(0.244)	
A	P	47.7		25.1(0.988)	33.3		8.2(0.325)	21.0		5.9(0.232)
	S	(1.878)	24.8(0.976)		(1.311)	8.0(0.315)		(0.827)	6.2(0.244)	
B	P	64.5		28.8(1.528)	47.0		8.2(0.325)	21.0		5.9(0.232)
	S	(2.539)	38.5(1.513)		(1.850)	8.0(0.315)		(0.827)	6.2(0.244)	

Panel cutouts

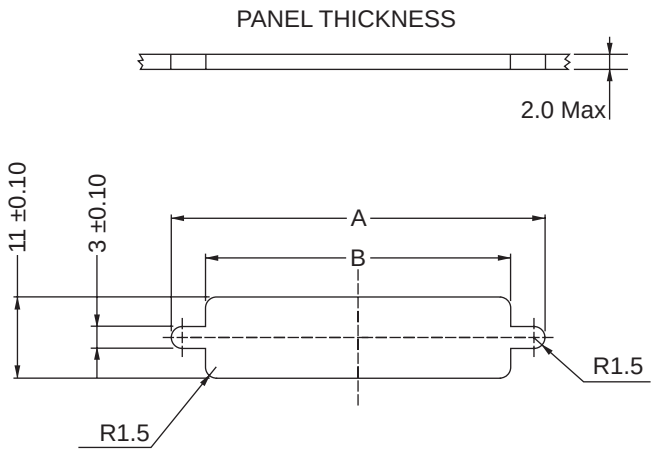

SHELL SIZE	A ±0.10(±.004)	B 0 / -0.10(0 / -.004)
E	28.8 (1.111)	20.0 (0.788)
A	36.5 (1.438)	28.0 (1.103)
B	51.0 (2.009)	41.5 (1.635)

Downloaded from Arrow.com.

NOTES

Connector Dimensions

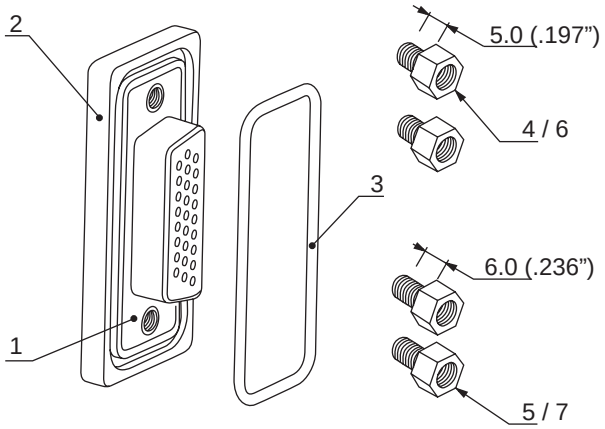

NO	Description	Material	Qty
2	Housing	Black thermoplastic UL 94-VO	1
1	Front shell	Steel tin plated	1
3	Ring	Silicone	1
4 & 5	#4-40 Front screw lock	Steel, Nickel plated	4
6 & 7	M3 Front screw lock	Steel, Nickel plated	4

How to order

Examples: L 717 ED 09 P 0 0
L 77 EHD 26 S 2 1 1

L 17 ... ...

RoHS Compliant

ED = Standard density series
EHD = High density series

Number of contacts
Standard density: **09, 15, 25**
High density: **15, 26, 44**

Contact type
P = Plug
S = Socket

Panel mounting option
Blank = 4-40 x 4 (4 & 5)
1 = M3 x 4 (6 & 7)

Contact plating
0 = Gold flash
1 = 0.4µm (15µ") gold
2 = 0.76µm (30µ") gold

Termination
0 = Solder cup
1 = Straight PCB without stand-off & boardlocks
2 = Straight PCB with stand-off & boardlocks
3 = Right angle PCB without brackets & boardlocks
4 = Right angle PCB with brackets & boardlocks

For special request, please consult factory

Do not hesitate to contact us for further information

Amphenol

Amphenol IT & Communication Products
Block A3/A4, The 4th Industrial District of
Industrial Headquarters, Dong Keng Road
Gong Ming Town, Shen Zhen China
Fax:+86(0)755 2754 9955

Technical Support
Tel:+86(0)755 2717 7945
Info-dsub@amphenol.com.cn
http://www.dsubconnector.com

ED-EHD/F The information given in this document are as a guideline only. We reserve the right to modify our products in any way we deem necessary. Any duplication is prohibited, unless approved in writing.

Downloaded from Arrow.com.