PRODUCT CATALOG

HIROSE ELECTRIC CO.,LTD.

BWA Series

Conversion Adapter

RF

Wide Variation

Adapter



Oct.1.2026 Copyright 2026 HIROSE ELECTRIC CO., LTD. All Rights Reserved.

Product Page
https://www.hirose.com/en/product/series/BWA

Jun. 2024

Downloaded from Arrow.com.

Features

1. Use to connect different types of connectors.

2. Wide variety.

3. RoHS2 Compliant

Applications

For various high frequency equipment, measuring instruments, testing and measurement, etc.

Product Specifications

Performance is comparable to that of series, which has a lower level of performance in the two series parts of the joint.

Materials / Finish

Conform to each type of connector.

Product Number Structure

Refer to the chart below when determining the product specifications from the product number.
Please select from the product numbers listed in this catalog when placing orders.

■ General Product Number

HRM ❶ J ❷ - TNC ❶ J ❷ - PA ❸

❶ Series Name		❸ Adapter Type	PA : Panel Adapter (Screw Type) BPA : Panel Adapter (Nut Type) LA : Right Angle Type
❷ Mated Portion Type	P : Plug J : Jack		

■ Product Number of SMA (HRM) to N, BNC and S Conversion Adapter

HRM - ❶ ❷

❶ Converter Adapter	
❷ Serial Number	

Oct.1.2026 Copyright 2026 HIROSE ELECTRIC CO., LTD. All Rights Reserved.

Downloaded from Arrow.com.

N Series

Plug



Part No.	HRS No.	Mated Portion 2 Series Name	Mated Portion 2 Connector Type	Purchase Unit
JUG-201A/U(40)	CL0311-0007-8-40	BNC	Jack	20pcs per bag
HRM-555S(40)	CL0311-0125-4-40	SMA(HRM)	Plug	
HRM-554S(40)	CL0311-0123-9-40	SMA(HRM)	Jack	

Jack



Part No.	HRS No.	Mated Portion 2 Series Name	Mated Portion 2 Connector Type	Remarks	Purchase Unit
HRM-553S	CL0311-0121-3-00	SMA(HRM)	Plug	-	20pcs per bag
HRM-557SV	CL0311-0272-9-00			For panel installation	
HRM-552S	CL0311-0119-1-00	SMA(HRM)	Jack	-	
HRM-556SV	CL0311-0298-2-00			For panel installation	

Oct.1.2026 Copyright 2026 HIROSE ELECTRIC CO., LTD. All Rights Reserved.

Downloaded from Arrow.com.

N75 Series

Jack



Part No.	HRS No.	Mated Portion 2 Series Name	Mated Portion 2 Connector Type	Purchase Unit
NCJ-NFP(40)	CL0355-0011-0-40	Model C15 (NF)	Plug	10pcs per bag
NCJ-PL75P(01)	CL0311-0412-6-01	PL75	Plug	
NCJ-PL75J(01)	CL0311-0413-9-01	PL75	Jack	

Oct.1.2026 Copyright 2026 HIROSE ELECTRIC CO., LTD. All Rights Reserved.

Downloaded from Arrow.com.

BNC Series

Plug



Part No.	HRS No.	Mated Portion 2 Series Name	Mated Portion 2 Connector Type	Purchase Unit
HRM-519(40)	CL0311-0101-6-40	SMA(HRM)	Plug	20pcs per bag
HRM-518(40)	CL0311-0100-3-40	SMA(HRM)	Jack	

Jack

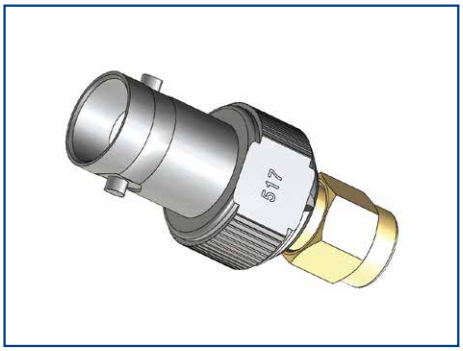

Part No.	HRS No.	Mated Portion 2 Series Name	Mated Portion 2 Connector Type	Remarks	Purchase Unit
HRM-517(40)	CL0311-0099-6-40	SMA(HRM)	Plug	-	20pcs per bag
HRM-516(40)	CL0311-0102-9-40	SMA(HRM)	Jack	-	
BNCJ-UMJ-PA(44)	CL0311-0103-1-44	UM	Jack	For panel installation	

Oct.1.2026 Copyright 2026 HIROSE ELECTRIC CO., LTD. All Rights Reserved.

Downloaded from Arrow.com.

BNC75 Series

Jack



Part No.	HRS No.	Mated Portion 2 Series Name	Mated Portion 2 Connector Type	Remarks	Purchase Unit
BNC(75)J-H.FLJ-BPA(40)	CL0311-0302-8-40	H.FL75	Jack	For panel installation	20pcs per bag
BNC(75)J-D.FL75J-BPA-2	CL0311-0039-0-00	D.FL75	Jack	For panel installation	
BNC(75)J-PL71J-BPA(40)	CL0311-0304-3-40	PL71	Jack	For panel installation	

Oct.1.2026 Copyright 2026 HIROSE ELECTRIC CO., LTD. All Rights Reserved.

Downloaded from Arrow.com.

TNC Series

Plug



Part No.	HRS No.	Mated Portion 2 Series Name	Mated Portion 2 Connector Type	Purchase Unit
TNCP-HRMJ-1(40)	CL0311-0345-0-40	SMA(HRM)	Jack	20pcs per bag

Jack



Part No.	HRS No.	Mated Portion 2 Series Name	Mated Portion 2 Connector Type	Remarks	Purchase Unit
HRMJ-TNCJ-PA(40)	CL0311-0202-3-40	SMA(HRM)	Jack	For panel installation	20pcs per bag

Oct.1.2026 Copyright 2026 HIROSE ELECTRIC CO., LTD. All Rights Reserved.

Downloaded from Arrow.com.

S Series

Plug



Part No.	HRS No.	Mated Portion 2 Series Name	Mated Portion 2 Connector Type	Purchase Unit
HRM-509(31)	CL0311-0093-0-31	SMA(HRM)	Plug	20pcs per bag

Jack



Part No.	HRS No.	Mated Portion 2 Series Name	Mated Portion 2 Connector Type	Remarks	Purchase Unit
HRM-512S(40)	CL0311-0144-9-40	SMA(HRM)	Plug	For panel installation, S type (Note)	20pcs per bag
HRM-506(40)	CL0311-0090-1-40	SMA(HRM)	Jack	-	
HRM-511(40)	CL0311-0094-2-40	SMA(HRM)	Jack	For panel installation	

(Note) S type indicates exterior passivated finish type.

Oct.1.2026 Copyright 2026 HIROSE ELECTRIC CO., LTD. All Rights Reserved.

Downloaded from Arrow.com.

UM Series

Plug



Part No.	HRS No.	Mated Portion 2 Series Name	Mated Portion 2 Connector Type	Purchase Unit
UM.P-HRM.J(40)	CL0311-0176-5-40	SMA(HRM)	Jack	20pcs per bag

Jack



Part No.	HRS No.	Mated Portion 2 Series Name	Mated Portion 2 Connector Type	Purchase Unit
HRMJ-UMJ(40)	CL0311-0164-6-40	SMA(HRM)	Jack	20pcs per bag

Oct.1.2026 Copyright 2026 HIROSE ELECTRIC CO., LTD. All Rights Reserved.

Downloaded from Arrow.com.

MSS Series

Plug



Part No.	HRS No.	Mated Portion 2 Series Name	Mated Portion 2 Connector Type	Purchase Unit
BNCJ-MSSP(40)	CL0311-0081-0-40	BNC	Jack	20pcs per bag

Jack

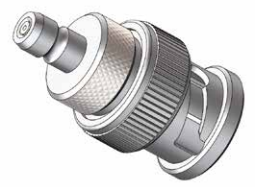

Part No.	HRS No.	Mated Portion 2 Series Name	Mated Portion 2 Connector Type	Purchase Unit
BNCP-MSSJ(40)	CL0311-0082-3-40	BNC	Plug	20pcs per bag

Oct.1.2026 Copyright 2026 HIROSE ELECTRIC CO., LTD. All Rights Reserved.

Downloaded from Arrow.com.

FL Various

Plug

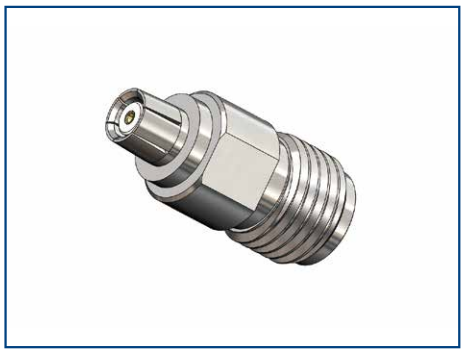

Part No.	HRS No.	Mated Portion 1 Series Name	Mated Portion 1 Connector Type	Mated Portion 2 Series Name	Mated Portion 2 Connector Type	Remarks	Purchase Unit
HRMJ-H.FLP-3(40)	CL0311-0264-0-40	H.FL	Plug	SMA(HRM)	Jack	For receptacle side measurement	20pcs per bag
HRMJ-E.FLP(40)	CL0311-0278-5-40	E.FL	Plug	SMA(HRM)	Jack	For receptacle side measurement	
HRMJ-U.FLP(40)	CL0311-0301-5-40	U.FL	Plug	SMA(HRM)	Jack	For receptacle side measurement	
HRMJ-X.FLP	CL0311-0436-4-00	X.FL	Plug	SMA(HRM)	Jack	For receptacle side measurement	
HRMJ-X.FLP-ST3	CL0311-0450-5-00	X.FL	Plug	SMA(HRM)	Jack	For receptacle automatic inspection	
HRMJ-W.FLP(40)	CL0311-0368-6-40	W.FL2	Plug	SMA(HRM)	Jack	For receptacle side measurement	
HRMJ-W.FL2P-ST3	CL0311-0417-0-00	W.FL2	Plug	SMA(HRM)	Jack	For receptacle automatic inspection	

Jack



Part No.	HRS No.	Mated Portion 1 Series Name	Mated Portion 1 Connector Type	Mated Portion 2 Series Name	Mated Portion 2 Connector Type	Remarks	Purchase Unit
HRMP-H.FLJ(40)	CL0311-0232-4-40	H.FL	Jack	SMA(HRM)	Plug	For cable assembly inspection	20pcs per bag
HRMP-E.FLJ(40)	CL0311-0279-8-40	E.FL	Jack	SMA(HRM)	Plug	For cable assembly inspection	
HRMP-U.FLJ(40)	CL0311-0300-2-40	U.FL	Jack	SMA(HRM)	Plug	For cable assembly inspection	
HRMP-X.FLJ	CL0311-0435-1-00	X.FL	Jack	SMA(HRM)	Plug	For cable assembly inspection	
HRMP-W.FL2J	CL0311-0394-6-00	W.FL2	Jack	SMA(HRM)	Plug	For cable assembly inspection	

Oct.1.2026 Copyright 2026 HIROSE ELECTRIC CO., LTD. All Rights Reserved.

Downloaded from Arrow.com.

FL Series

Plug



Part No.	HRS No.	Mated Portion 2 Series Name	Mated Portion 2 Connector Type	Purchase Unit
HRMJ-FLP-1(41)	CL0311-0195-0-41	SMA(HRM)	Jack	20pcs per bag

Jack



Part No.	HRS No.	Mated Portion 2 Series Name	Mated Portion 2 Connector Type	Purchase Unit
HRMJ-FLJ(40)	CL0311-0179-3-40	SMA(HRM)	Jack	20pcs per bag

Oct.1.2026 Copyright 2026 HIROSE ELECTRIC CO., LTD. All Rights Reserved.

Downloaded from Arrow.com.

PO (Push-on) Various

Plug



Part No.	HRS No.	Mated Portion 1 Series Name	Mated Portion 1 Connector Type	Mated Portion 2 Series Name	Mated Portion 2 Connector Type	Remarks	Purchase Unit
HRMP-POBP-1(40)	CL0311-0169-0-40	POB	Plug	SMA(HRM)	Plug	-	20pcs per bag
HRMJ-POBP(40)	CL0311-0151-4-40	POB	Plug	SMA(HRM)	Jack	-	
HRMJ-PODP(40)	CL0311-0157-0-40	POD	Plug	SMA(HRM)	Jack	-	
HRMJ-PO6P(40)	CL0311-0173-7-40	PO6	Plug	SMA(HRM)	Jack	-	
PO(ST)P-HRMJ(40)	CL0311-0327-9-40	PO(ST)	Plug	SMA(HRM)	Jack	-	
PO(ST)PP-HRMJ(4.8)-2	CL0311-0430-8-00	PO(ST)	Plug	SMA(HRM)	Jack	For panel installation	

Jack

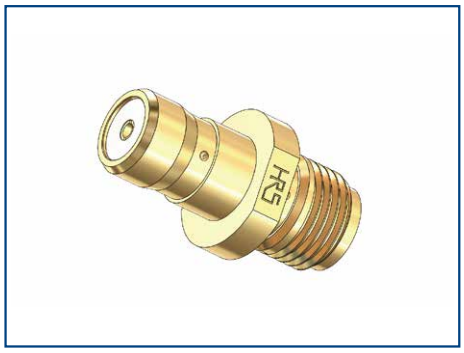

Part No.	HRS No.	Mated Portion 1 Series Name	Mated Portion 1 Connector Type	Mated Portion 2 Series Name	Mated Portion 2 Connector Type	Remarks	Purchase Unit
HRMP-POBJ	CL0311-0152-7-00	POB	Jack	SMA(HRM)	Plug	-	20pcs per bag
HRMJ-POBJ(40)	CL0311-0149-2-40	POB	Jack	SMA(HRM)	Jack	-	
HRMJ-POBJ-PA(40)	CL0311-0150-1-40	POB	Jack	SMA(HRM)	Jack	For panel installation	
HRM.P-POD.J(40)	CL0311-0177-8-40	POD	Jack	SMA(HRM)	Plug	-	
HRMP-PO6J(40)	CL0311-0172-4-40	PO6	Jack	SMA(HRM)	Plug	-	
PO(ST)J-HRMJ-PA(16.6)(41)	CL0311-0335-7-41	PO(ST)	Jack	SMA(HRM)	Jack	For panel installation	

Oct.1.2026 Copyright 2026 HIROSE ELECTRIC CO., LTD. All Rights Reserved.

Downloaded from Arrow.com.

PO51 Series

Plug

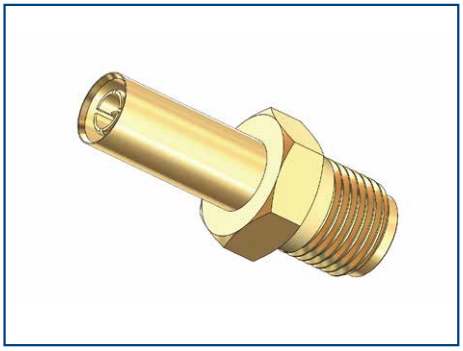

Part No.	HRS No.	Mated Portion 2 Series Name	Mated Portion 2 Connector Type	Purchase Unit
HRMJ-PO51P(40)	CL0311-0231-1-40	SMA(HRM)	Jack	20pcs per bag

Oct.1.2026 Copyright 2026 HIROSE ELECTRIC CO., LTD. All Rights Reserved.

Downloaded from Arrow.com.

ML51 Series

Plug

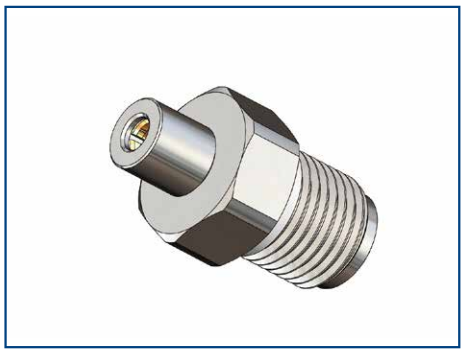

Part No.	HRS No.	Mated Portion 2 Series Name	Mated Portion 2 Connector Type	Purchase Unit
HRM.J-ML51.P-A(41)	CL0311-0317-5-41	SMA(HRM)	Jack	20pcs per bag
HRMMJ-ML51P-LA	CL0311-0460-9-00	SSMA(HRMM)	Jack	

Jack

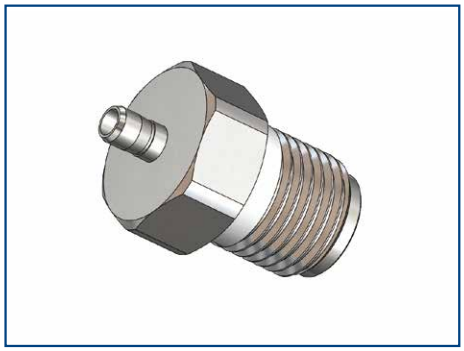

Part No.	HRS No.	Mated Portion 2 Series Name	Mated Portion 2 Connector Type	Purchase Unit
HRM.J-ML51.J-A	CL0311-0316-2-00	SMA(HRM)	Jack	20pcs per bag

While Taking into Consideration

Specifications mentioned in this catalog are reference values.
When considering to order or use this product, please review the Drawing and Product Specifications sheets.
Use an appropriate cable when using the connector in combination with cables.
If considering usage of a non- specified cable, please contact your sales representative.
If assembly process is done by jigs & tools which are not identified by Hirose, the warranty of the product may be affected.
If considering usage for below mentioned applications, please contact your sales representative.
In cases where the application will demand a high level of reliability, such as automotive, medical instruments, public infrastructure, aerospace/ defense etc. Hirose must review before assurance of reliability can be given.

Oct.1.2026 Copyright 2026 HIROSE ELECTRIC CO., LTD. All Rights Reserved.

HIROSE ELECTRIC CO.,LTD. 2-6-3,Nakagawa Chuoh,Tsuzuki-Ku,Yokohama-Shi 224-8540,JAPAN
https://www.hirose.com

※The contents of this catalog are current as of date of 6/2024. Contents are subject to change without notice for the purpose of improvements.
※The HRS logo and "HIROSE" are trademarks of HIROSE ELECTRIC CO., LTD.

Downloaded from Arrow.com.