SAJS Series – Snap Action Switches

Applications

- **Kitchen Appliances**
- **Vacuum Cleaners**
- **Print and Process equipment**
- **Low voltage applications**

Features

- **Sealed to IP67**
- **Conforms to IP67**
- **Various termination styles**
- **Highly reliable with long operating life.**



TE Connectivity SAJS Series of Snap Action Switches offer flexibility through various combinations of terminal styles. These switches are designed to convert a mechanical action in an electrical one. This makes them very suitable for applications such as Home Appliances and Factory Automation as well as other domestic and industrial uses.

TE's Snap Action Switches are dimensionally identical with other popular brands, making them extremely suitable for use in existing designs. They are available with various contact styles to aid flexibility

Specifications

Contact Rating	2A at 250V/ 30 AC
Mechanical Durability	1,000,000 cycles min
Electrical Durability	50,000 cycles min.
Contact Resistance	50mΩ max.
Insulation Resistance	100MΩ min. (500 VDC)
Dielectric Strength	Between terminals of the same polarity: 1000 V AC (50Hz or 60Hz) for 1 minute Between current-carrying metal parts and ground 1,500VAC, 50/60 Hz for 1 minute Between each terminal and non-current-carrying metal part 1,500VAC, 50/60Hz for 1 minute
Operating Temperature	-40°C ~ +85°C

Downloaded from Arrow.com.

Circuit

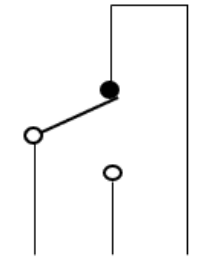

How to Order

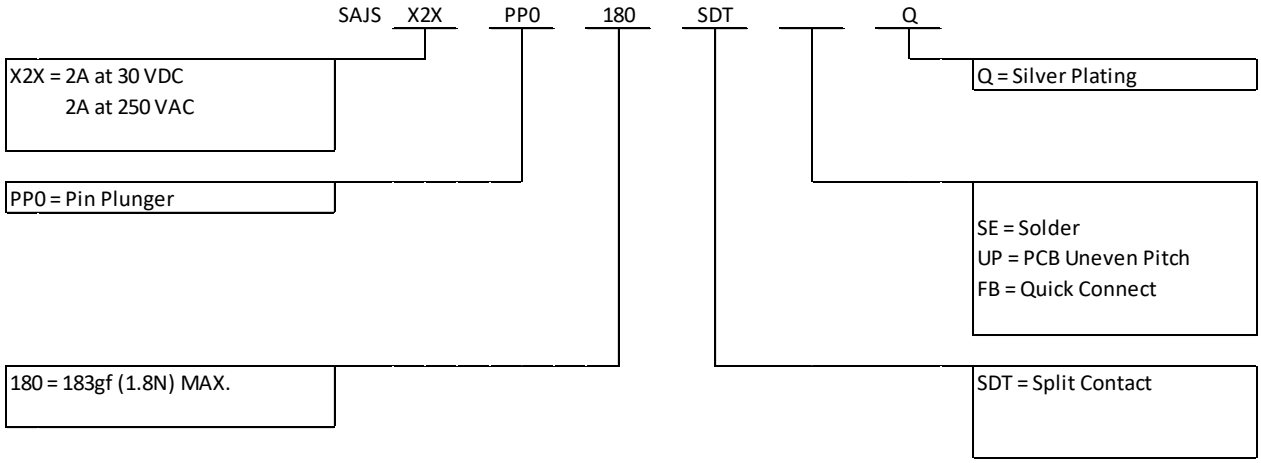

Downloaded from Arrow.com.

Mechanical Measurements

TE Smart Part Number: SAJSX2XPP0180SDTUPQ

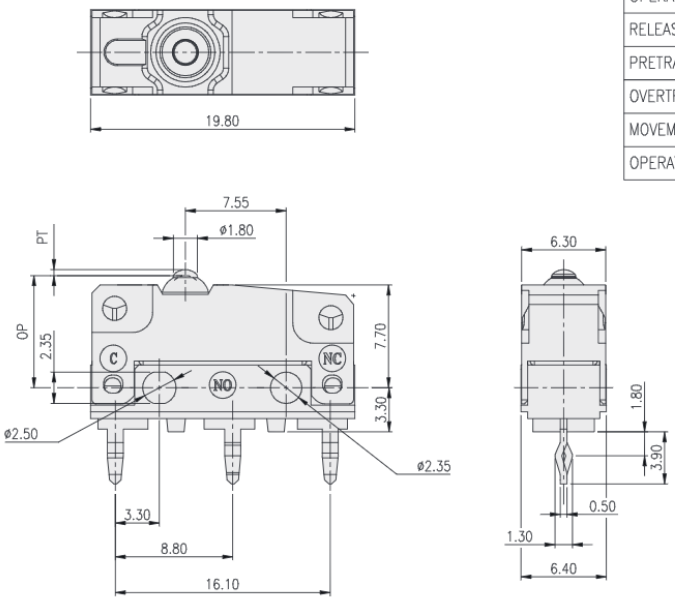

OPERATING CHARACTERISTICS

ITEM	SPEC.
OPERATING FORCE(OF)	183gf (1.8N) MAX.
RELEASE FORCE(RF)	20gf (0.2N) MIN.
PRETRAVEL(PT)	0.6mm MAX.
OVERTRAVEL(OT)	0.4mm MIN.
MOVEMENT DIFFERENTIAL(MD)	0.15mm MAX.
OPERATING POSITION(OP)	8.4±0.3mm

TE Smart Part Number: SAJSX2XPP0180SDTFBQ

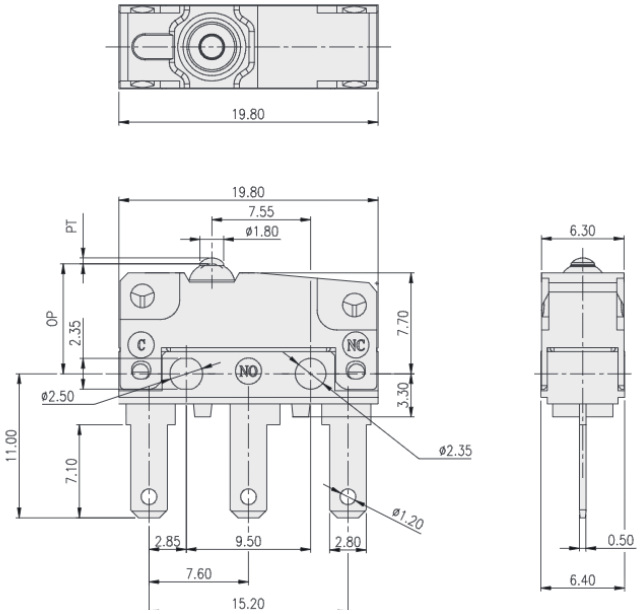

OPERATING CHARACTERISTICS

ITEM	SPEC.
OPERATING FORCE(OF)	183gf (1.8N) MAX.
RELEASE FORCE(RF)	20gf (0.2N) MIN.
PRETRAVEL(PT)	0.6mm MAX.
OVERTRAVEL(OT)	0.4mm MIN.
MOVEMENT DIFFERENTIAL(MD)	0.15mm MAX.
OPERATING POSITION(OP)	8.4±0.3mm

Downloaded from Arrow.com.

Mechanical Measurements

TE Smart Part Number: SAJSX2XPP0180SDTSEQ

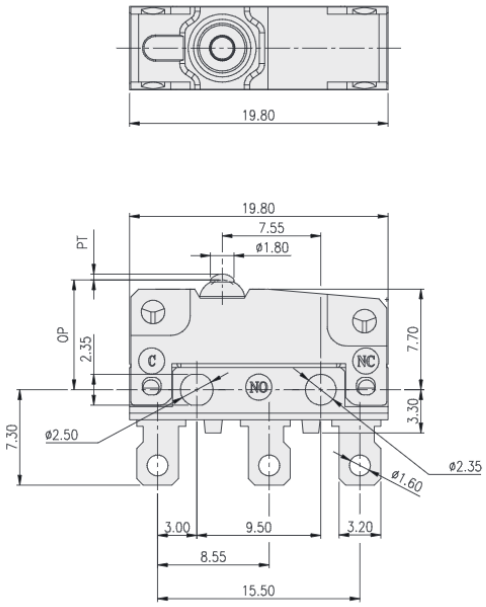

OPERATING CHARACTERISTICS

ITEM	SPEC.
OPERATING FORCE(OF)	183gf (1.8N) MAX.
RELEASE FORCE(RF)	20gf (0.2N) MIN.
PRETRAVEL(PT)	0.6mm MAX.
OVERTRAVEL(OT)	0.4mm MIN.
MOVEMENT DIFFERENTIAL(MD)	0.15mm MAX.
OPERATING POSITION(OP)	8.4±0.3mm

Downloaded from Arrow.com.