THIS DRAWING IS UNPUBLISHED. RELEASED FOR PUBLICATION 20
© COPYRIGHT 20 BY TYCO ELECTRONICS CORPORATION. ALL RIGHTS RESERVED.

LOC	DIST
AL	2

REVISIONS

P	LTR	DESCRIPTION	DATE	DWN	APVD
	AC	REVISED BY ES00-0040-02	02APR02	J.L	J.L
	AD	REVISED BY ES00-05-0095	14/DEC/05	J.L	JL
	AD1	REVISED PER ECO-10-000444	09JAN10	KK	AEG
	AD2	ECR-10-009742	29JUN10	RK	SRE
	AD3	ADDED NEW DASH 3-160759-4	22MAR11	J.S.	L.B.
	AD4	UPDATED TE CONNECTIVITY LOGO	04APR2011	J.S.	L.B.

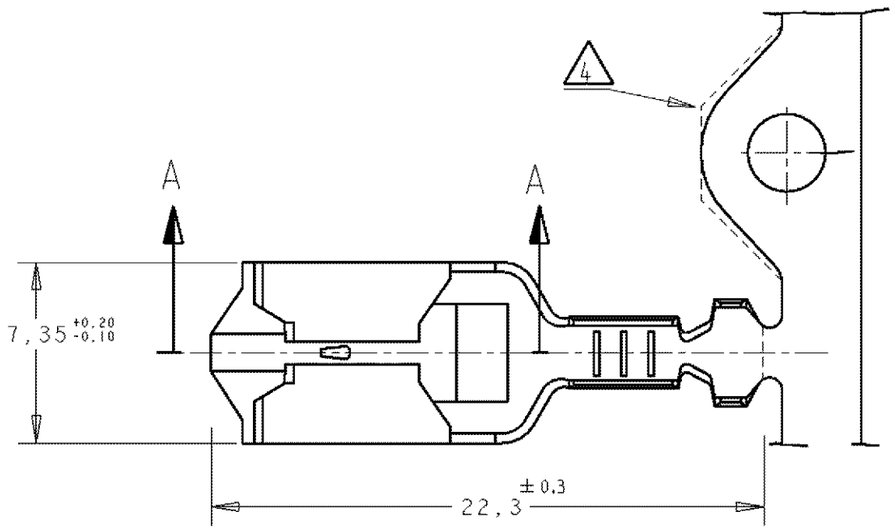

NOTES:

1 FOR USE ON STANDARD APPLICATOR (RIGHT-LEFT FEED)

2 FOR USE ON MINIATURE APPLICATOR (LEFT-RIGHT FEED)

3 FOR USE ON MINIATURE APPLICATOR (LEFT-RIGHT FEED) AMPOMATOR APPLICATION.

4 CONFIGURATION OF CARRIER-STRIP OPTIONAL

5 OBSOLETE PARTS: OBSOLETE CIS STREAMLINING PER D.RENAUD/D.SINISI

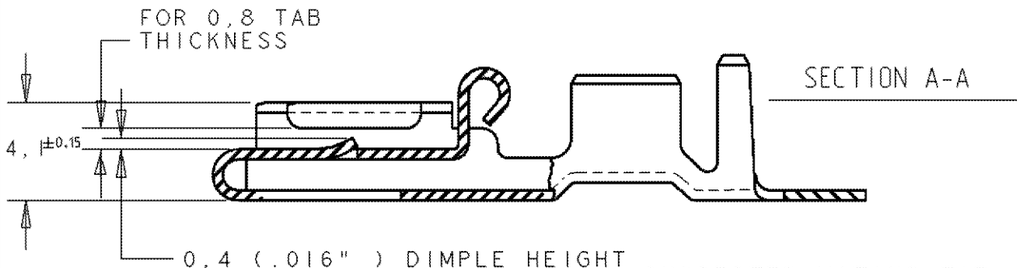

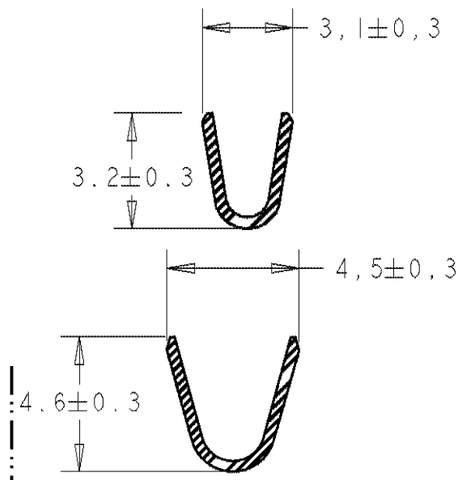

1- MATL.1/2H BRASS OR NICKEL PL.STEEL.
2- NO BURRS PERMISSIBLE AT HOLE
3 -MUST BE FLAT WITHIN 0.076 OVER THIS LENG.
4-TIN PLATING IS REQUIRED ON BRASS WHEN TERMINALTEM. IS OVER 225°F
5- HOLE MUST BE SYMETRICAL ABOUT TAB ℄ WITHIN 0.076

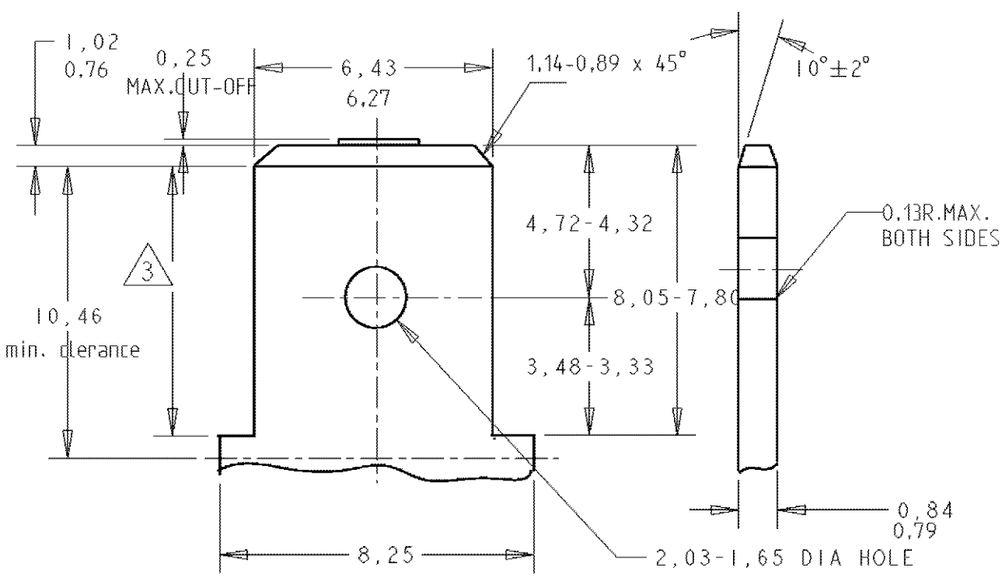

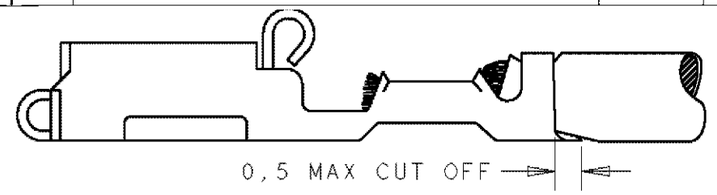

	UNPLATED & DEGREASED	NICKEL SILVER	2	3-160759-4
	UNPLATED	NICKEL SILVER	3	3-160759-3
OBSOLETE	UNPLATED	NICKEL SILVER	3	3-160759-3
	TIN PLATED	PH.BRONZE	3	3-160759-0
	UNPLATED	NICKEL SILVER	2	2-160759-9
5 OBSOLETE	HOT DIP PRETIN.	PH.BRONZE	3	~~2-160759-8~~
SUPERSEDED BY 160759-4	TIN-LEAD	PH.BRONZE	2	~~2-160759-7~~
	SILVERPLATED	BRASS	3	~~2-160759-6~~
	UNPLATED	BRASS	3	~~2-160759-5~~
5 OBSOLETE	HOT DIP PRETIN.	BRASS	3	~~2-160759-4~~
	TIN PLATED	BRASS	3	~~2-160759-3~~
	NICKEL PLATED	PH.BRONZE	1	~~2-160759-2~~
	NICKEL PLATED	PH.BRONZE	2	2-160759-1
5 OBSOLETE	SILVERPLATED	PH.BRONZE	1	~~2-160759-0~~
	SILVERPLATED	PH.BRONZE	2	1-160759-9
	HOT DIP PRETIN.	PH.BRONZE	1	1-160759-4
5 OBSOLETE	HOT DIP PRETIN.	BRASS	1	~~1-160759-3~~
	HOT DIP PRETIN.	PH.BRONZE	2	1-160759-2
	HOT DIP PRETIN.	BRASS	2	1-160759-1
	PRETINNED	PH.BRONZE	1	~~1-160759-0~~
5 OBSOLETE	TIN PLATED	PH.BRONZE	1	~~0-160759-9~~
	TIN PLATED	BRASS	1	~~0-160759-8~~
	UNPLATED	PH.BRONZE	1	0-160759-7
	UNPLATED	BRASS	1	0-160759-6
5 OBSOLETE	PRETINNED	PH.BRONZE	2	~~0-160759-5~~
	TIN PLATED	PH.BRONZE	2	0-160759-4
	TIN PLATED	BRASS	2	0-160759-3
	UNPLATED	PH.BRONZE	2	0-160759-2
	UNPLATED	BRASS	2	0-160759-1
FINISH	MATERIAL			PARTNUMBER

THIS DRAWING IS A CONTROLLED DOCUMENT FOR TYCO ELECTRONICS CORPORATION. IT IS SUBJECT TO CHANGE AND THE CONTROLLING ENGINEERING ORGANIZATION SHOULD BE CONTACTED FOR THE LATEST REVISION.

DIMENSIONS: mm

TOLERANCES UNLESS OTHERWISE SPECIFIED:
0 PLC ±-
1 PLC ±-
2 PLC ±0,3 GENERAL
3 PLC ±-
4 PLC ±-
ANGLES ±-

MATERIAL SEE TABLE
FINISH SEE TABLE

DWN J.Z 16-11-95
CHK A.BIJNEN 17-11-95
APVD -
PRODUCT SPEC 108-3017
APPLICATION SPEC -
WEIGHT -

TE Connectivity

NAME POSITIVE LOCK REC. .250 (6,35) SERIES -

SIZE	CAGE CODE	DRAWING NO	RESTRICTED TO
A3	00779	C-160759	-

CUSTOMER DRAWING | SCALE - | SHEET 1 OF 1 | REV AD4

AMP 1470-19 REV 31MAR2000

Downloaded from Arrow.com.