molex

MX150 2X10 BLADE SEALED ASSEMBLY MAT SEAL
BOM AND PIN OUT SHEET

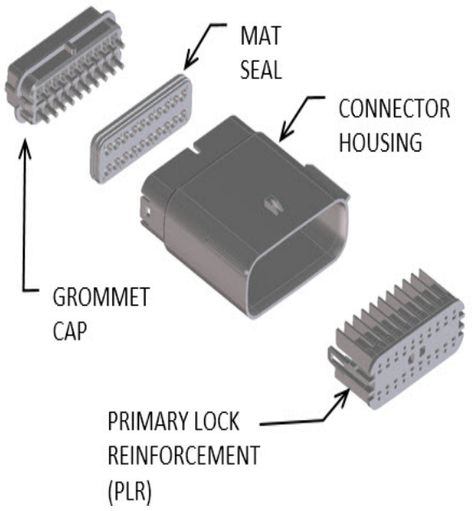

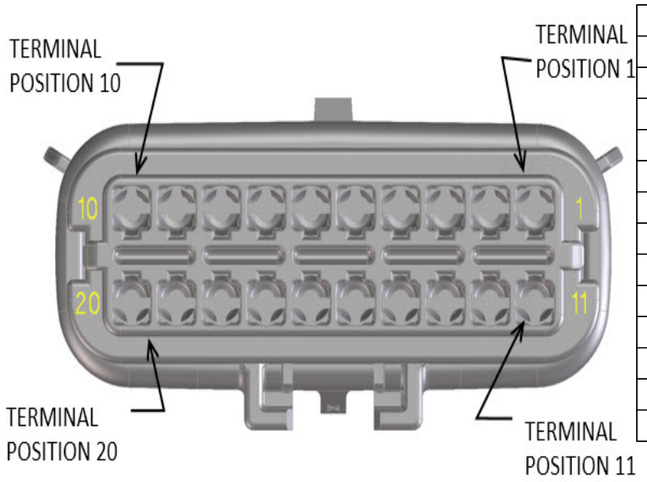

ABBREVIATION	DESCRIPTION	COLOR	MATERIAL
A-BLACK	HOUSING, KEYING OPTION A	BLACK	SPS/NYLON GF20
B-LIGHT GRAY	HOUSING, KEYING OPTION B	LIGHT GRAY	SPS/NYLON GF20
C-BROWN	HOUSING, KEYING OPTION C	BROWN	SPS/NYLON GF20
D-GREEN	HOUSING, KEYING OPTION D	GREEN	SPS/NYLON GF20
A-YELLOW	HOUSING, KEYING OPTION A	YELLOW	SPS/NYLON GF20
C-DARK GRAY	HOUSING, KEYING OPTION C	DARK GRAY	SPS/NYLON GF20
D-STONE GRAY	HOUSING, KEYING OPTION D	STONE GRAY	SPS/NYLON GF20
A-LIGHT BLUE	HOUSING,KEYING OPTION A	LIGHT BLUE	SPS/NYLON GF 20
GCO	GROMMET CAP (OPEN)	BLACK	SPS/NYLON GF20
GCP	GROMMET CAP (PLUGGED)	BLACK	SPS/NYLON GF20
PLR	PLR	NATURAL	SPS/NYLON GF20
M-R	MAT SEAL	RUST RED	INHERENTLY LUBRICATED SILICONE
M-B	MAT SEAL	LIGHT BLUE	INHERENTLY LUBRICATED SILICONE

FOR ADDITIONAL INFORMATION SEE SD-33482-0001

ASSEMBLY DESCRIPTION	ASSEMBLY PART NUMBER	COMPONENT				BLOCKED TERMINALS										STATUS	COMMENT	OPTIONAL ATTACHMENTS SOLD SEPARATELY			
		THE PRESENCE OF AN ABBREVIATION INDICATES THE PRESENCE OF THAT COMPONENT				CAVITY WITH A NUMBER INDICATES BLOCKED TERMINAL POSITION CAVITY WITHOUT A NUMBER INDICATES OPEN TERMINAL POSITION												BACKSHELL WITH RIBS	BACKSHELL WITHOUT RIBS	90° ADAPTOR WITH RIBS	90° ADAPTOR WITHOUT RIBS
		HOUSING KEY/COLOR	GROMMET CAP	PLR	MAT SEAL																
MX150 ASSY BLD 2X10 BK A/20	334822001	A-BLACK	GCO	PLR	M-R	-	-	-	-	-	-	-	-	-	-	OBSOLETE	SEE PN 334822101	34950-2011	34950-2021	34951-1631	34951-1641
						-	-	-	-	-	-	-	-	-	-						
MX150 ASSY BLD 2X10 LG B/20	334822002	B-LIGHT GRAY	GCO	PLR	M-R	-	-	-	-	-	-	-	-	-	-	OBSOLETE	SEE PN 334822102	34950-2011	34950-2021	34951-1631	34951-1641
						-	-	-	-	-	-	-	-	-	-						
MX150 ASSY BLD 2X10 BR C/20	334822003	C-BROWN	GCO	PLR	M-R	-	-	-	-	-	-	-	-	-	-	OBSOLETE	SEE PN 334822154	34950-2011	34950-2021	34951-1631	34951-1641
						-	-	-	-	-	-	-	-	-	-						
MX150 ASSY BLD 2X10 GR D/20	334822004	D-GREEN	GCO	PLR	M-R	-	-	-	-	-	-	-	-	-	-	OBSOLETE	SEE PN 334822155	34950-2011	34950-2021	34951-1631	34951-1641
						-	-	-	-	-	-	-	-	-	-						
MX150 ASSY BLD 2X10 BK A/19	334822006	A-BLACK	GCP	PLR	M-R	-	-	-	-	-	-	-	-	-	-	OBSOLETE	SEE PN 334822106	34950-2011	34950-2021	34951-1631	34951-1641
						-	-	-	-	-	-	-	-	-	20						
MX150 ASSY BLD 2X10 BK A/19	334822007	A-BLACK	GCP	PLR	M-R	-	-	-	-	-	-	-	-	-	-	OBSOLETE	SEE PN 334822107	34950-2011	34950-2021	34951-1631	34951-1641
						11	-	-	-	-	-	-	-	-	-						
MX150 ASSY BLD 2X10 BK A/12	334822008	A-BLACK	GCP	PLR	M-R	-	-	-	4	5	6	7	-	-	-	OBSOLETE	SEE PN 334822108	34950-2011	34950-2021	34951-1631	34951-1641
						-	-	-	14	15	16	17	-	-	-						
MX150 ASSY BLD 2X10 BK A/18	334822009	A-BLACK	GCP	PLR	M-R	-	-	-	-	-	-	7	-	-	-	OBSOLETE	SEE PN 334822109	34950-2011	34950-2021	34951-1631	34951-1641
						-	-	-	-	-	16	-	-	-	-						
MX150 ASSY BLD 2X10 BK A/16	334822010	A-BLACK	GCP	PLR	M-R	-	-	-	-	-	-	-	-	-	10	OBSOLETE	SEE PN 334822110	34950-2011	34950-2021	34951-1631	34951-1641
						11	12	-	-	-	-	-	-	-	20						
MX150 ASSY BLD 2X10 BK A/17	334822011	A-BLACK	GCP	PLR	M-R	1	2	-	-	-	-	-	-	-	-	OBSOLETE	SEE PN 334822111	34950-2011	34950-2021	34951-1631	34951-1641
						-	-	-	-	-	-	-	-	-	20						
MX150 ASSY BLD 2X10 BK A/14	334822012	A-BLACK	GCP	PLR	M-R	1	2	-	-	-	-	-	-	-	10	OBSOLETE	SEE PN 334822112	34950-2011	34950-2021	34951-1631	34951-1641
						11	12	-	-	-	-	-	-	-	20						
MX150 ASSY BLD 2X10 BK A/12	334822013	A-BLACK	GCP	PLR	M-R	1	2	-	-	-	-	-	-	-	10	OBSOLETE	SEE PN 334822113	34950-2011	34950-2021	34951-1631	34951-1641
						11	12	13	14	-	-	-	-	-	20						
MX150 ASSY BLD 2X10 BK A/14	334822014	A-BLACK	GCP	PLR	M-R	-	-	3	4	5	-	-	-	-	-	OBSOLETE	SEE PN 334822114	34950-2011	34950-2021	34951-1631	34951-1641
						-	-	-	14	-	-	17	-	19	-						
MX150 ASSY BLD 2X10 BK A/16	334822015	A-BLACK	GCP	PLR	M-R	-	-	3	4	5	-	-	-	-	-	OBSOLETE	SEE PN 334822115	34950-2011	34950-2021	34951-1631	34951-1641
						-	-	-	-	-	-	17	-	-	-						
MX150 ASSY BLD 2X10 BK A/16	334822016	A-BLACK	GCP	PLR	M-R	-	2	-	-	-	-	-	-	-	-	OBSOLETE	SEE PN 334822116	34950-2011	34950-2021	34951-1631	34951-1641
						-	-	-	-	-	-	-	18	19	20						
MX150 ASSY BLD 2X10 BK A/17	334822017	A-BLACK	GCP	PLR	M-R	-	-	-	-	-	-	-	-	-	-	OBSOLETE	SEE PN 334822117	34950-2011	34950-2021	34951-1631	34951-1641
						-	-	-	-	-	-	-	18	19	20						
MX150 ASSY BLD 2X10 BK A/15	334822018	A-BLACK	GCP	PLR	M-R	-	-	-	-	-	-	-	-	-	10	OBSOLETE	SEE PN 334822118	34950-2011	34950-2021	34951-1631	34951-1641
						-	12	13	14	-	-	-	-	19	-						

Downloaded from Arrow.com.

molex

MX150 2X10 BLADE SEALED ASSEMBLY MAT SEAL
BOM AND PIN OUT SHEET

ASSEMBLY DESCRIPTION	ASSEMBLY PART NUMBER	COMPONENT				BLOCKED TERMINALS										STATUS	COMMENT	OPTIONAL ATTACHMENTS SOLD SEPARATELY			
		THE PRESENCE OF AN ABBREVIATION INDICATES THE PRESENCE OF THAT COMPONENT				CAVITY WITH A NUMBER INDICATES BLOCKED TERMINAL POSITION CAVITY WITHOUT A NUMBER INDICATES OPEN TERMINAL POSITION															
		HOUSING KEY/COLOR	GROMMET CAP	PLR	MAT SEAL													BACKSHELL WITH RIBS	BACKSHELL WITHOUT RIBS	90^0 ADAPTOR WITH RIBS	90^0 ADAPTOR WITHOUT RIBS
MX150 ASSY BLD 2X10 BK A/15	334822019	A-BLACK	GCP	PLR	M-R	-	-	3	4	-	-	-	-	-	-	OBSOLETE	SEE PN 334822119	34950-2011	34950-2021	34951-1631	34951-1641
		-	-	-	14	-	-	17	-	19	-										
MX150 ASSY BLD 2X10 BK A/12	334822020	A-BLACK	GCP	PLR	M-R	-	-	3	4	5	-	-	-	-	-	OBSOLETE	SEE PN 334822120	34950-2011	34950-2021	34951-1631	34951-1641
		-	-	-	14	-	-	17	18	19	20										
MX150 ASSY BLD 2X10 BK A/9	334822021	A-BLACK	GCP	PLR	M-R	1	2	3	4	5	-	-	-	-	10	OBSOLETE	SEE PN 334822121	34950-2011	34950-2021	34951-1631	34951-1641
		-	-	-	14	-	-	17	18	19	20										
MX150 ASSY BLD 2X10 BK A/14	334822022	A-BLACK	GCP	PLR	M-R	-	-	3	4	-	-	-	-	-	10	OBSOLETE	SEE PN 334822122	34950-2011	34950-2021	34951-1631	34951-1641
		-	-	-	14	-	-	17	-	19	-										
MX150 ASSY BLD 2X10 BK A/13	334822023	A-BLACK	GCP	PLR	M-R	-	-	-	-	-	-	-	-	-	10	OBSOLETE	SEE PN 334822123	34950-2011	34950-2021	34951-1631	34951-1641
		11	12	-	-	15	16	17	-	-	20										
MX150 ASSY BLD 2X10 BK A/16	334822024	A-BLACK	GCP	PLR	M-R	-	-	-	-	-	-	-	-	-	-	OBSOLETE	SEE PN 334822124	34950-2011	34950-2021	34951-1631	34951-1641
		-	-	-	-	15	16	17	-	-	20										
MX150 ASSY BLD 2X10 BK A/16	334822025	A-BLACK	GCP	PLR	M-R	-	-	-	-	-	-	-	-	-	10	OBSOLETE	SEE PN 334822125	34950-2011	34950-2021	34951-1631	34951-1641
		-	-	-	14	-	-	17	-	19	-										
MX150 ASSY BLD 2X10 BK A/13	334822026	A-BLACK	GCP	PLR	M-R	-	-	-	4	5	-	-	-	-	10	OBSOLETE	SEE PN 334822126	34950-2011	34950-2021	34951-1631	34951-1641
		-	-	-	14	15	-	17	-	19	-										
MX150 ASSY BLD 2X10 BK A/12	334822027	A-BLACK	GCP	PLR	M-R	-	-	-	4	5	-	-	-	-	10	OBSOLETE	SEE PN 334822127	34950-2011	34950-2021	34951-1631	34951-1641
		-	-	-	14	15	-	17	18	19	-										
MX150 ASSY BLD 2X10 BK A/2	334822028	A-BLACK	GCP	PLR	M-R	1	-	3	4	5	6	7	8	9	10	OBSOLETE	SEE PN 334822128	34950-2011	34950-2021	34951-1631	34951-1641
		11	-	13	14	15	16	17	18	19	20										
MX150 ASSY BLD 2X10 BK A/14	334822029	A-BLACK	GCP	PLR	M-R	-	-	-	4	5	6	7	-	-	-	OBSOLETE	SEE PN 334822129	34950-2011	34950-2021	34951-1631	34951-1641
		-	-	-	-	-	16	17	-	-	-										
MX150 ASSY BLD 2X10 BK A/12	334822030	A-BLACK	GCP	PLR	M-R	-	-	3	4	5	-	-	-	-	-	OBSOLETE	SEE PN 334822130	34950-2011	34950-2021	34951-1631	34951-1641
		-	-	13	14	15	-	-	18	19	-										
MX150 ASSY BLD 2X10 BK A/17	334822031	A-BLACK	GCP	PLR	M-R	-	-	-	4	-	-	7	-	-	-	OBSOLETE	SEE PN 334822131	34950-2011	34950-2021	34951-1631	34951-1641
		-	-	-	-	-	16	-	-	-	-										
MX150 ASSY BLD 2X10 BK A/13	334822032	A-BLACK	GCP	PLR	M-R	-	-	3	4	5	-	-	-	-	-	OBSOLETE	SEE PN 334822132	34950-2011	34950-2021	34951-1631	34951-1641
		-	-	13	-	15	-	-	18	19	-										
MX150 ASSY BLD 2X10 BK A/17	334822033	A-BLACK	GCP	PLR	M-R	-	-	-	-	-	-	-	-	-	10	OBSOLETE	SEE PN 334822133	34950-2011	34950-2021	34951-1631	34951-1641
		-	-	-	-	-	-	17	-	19	-										
MX150 ASSY BLD 2X10 BK A/16	334822034	A-BLACK	GCP	PLR	M-R	-	-	-	-	-	-	-	-	-	-	OBSOLETE	SEE PN 334822134	34950-2011	34950-2021	34951-1631	34951-1641
		-	-	-	-	-	-	17	18	19	20										
MX150 ASSY BLD 2X10 BK A/15	334822035	A-BLACK	GCP	PLR	M-R	-	-	-	-	-	-	-	-	-	-	OBSOLETE	SEE PN 334822135	34950-2011	34950-2021	34951-1631	34951-1641
		-	-	-	-	-	16	17	18	19	20										
MX150 ASSY BLD 2X10 BK A/14	334822036	A-BLACK	GCP	PLR	M-R	-	-	-	-	-	-	7	-	9	-	OBSOLETE	SEE PN 334822136	34950-2011	34950-2021	34951-1631	34951-1641
		-	-	-	-	-	-	17	18	19	20										
MX150 ASSY BLD 2X10 BK A/18	334822037	A-BLACK	GCP	PLR	M-R	-	-	-	-	-	-	7	-	9	-	OBSOLETE	SEE PN 334822137	34950-2011	34950-2021	34951-1631	34951-1641
		-	-	-	-	-	-	-	-	-	-										
MX150 ASSY BLD 2X10 BK A/7	334822038	A-BLACK	GCP	PLR	M-R	1	2	3	4	5	6	7	8	9	10	OBSOLETE	SEE PN 334822138	34950-2011	34950-2021	34951-1631	34951-1641
		-	12	-	-	-	-	17	-	19	-										
MX150 ASSY BLD 2X10 BK A/9	334822039	A-BLACK	GCP	PLR	M-R	1	2	3	4	5	6	7	8	-	10	OBSOLETE	SEE PN 334822139	34950-2011	34950-2021	34951-1631	34951-1641
		-	-	-	-	-	-	17	-	19	-										
MX150 ASSY BLD 2X10 BK A/17	334822040	A-BLACK	GCP	PLR	M-R	-	-	-	-	-	-	7	-	-	-	OBSOLETE	SEE PN 334822140	34950-2011	34950-2021	34951-1631	34951-1641
		-	-	-	-	-	-	17	-	-	20										
MX150 ASSY BLD 2X10 YW A/20	334822041	A-YELLOW	GCO	PLR	M-R	-	-	-	-	-	-	-	-	-	-	OBSOLETE	SEE PN 334822141	34950-2011	34950-2021	34951-1631	34951-1641
		-	-	-	-	-	-	-	-	-	-										
MX150 ASSY BLD 2X10 BK A/15	334822042	A-BLACK	GCP	PLR	M-R	-	-	-	-	-	-	-	-	-	10	OBSOLETE	SEE PN 334822142	34950-2011	34950-2021	34951-1631	34951-1641
		-	-	-	14	-	-	17	18	19	-										
MX150 ASSY BLD 2X10 BK A/15	334822043	A-BLACK	GCP	PLR	M-R	-	2	-	4	-	-	-	-	-	-	OBSOLETE	SEE PN 334822143	34950-2011	34950-2021	34951-1631	34951-1641
		11	12	-	14	-	-	-	-	-	-										
MX150 ASSY BLD 2X10 BK A/18	334822044	A-BLACK	GCP	PLR	M-R	-	-	-	-	-	-	-	-	-	-	OBSOLETE	SEE PN 334822144	34950-2011	34950-2021	34951-1631	34951-1641
		-	-	-	-	-	-	-	18	19	-										
MX150 ASSY BLD 2X10 BK A/18	334822045	A-BLACK	GCP	PLR	M-R	-	-	-	-	-	-	-	-	9	10	OBSOLETE	SEE PN 334822145	34950-2011	34950-2021	34951-1631	34951-1641
		-	-	-	-	-	-	-	-	-	-										

Downloaded from Arrow.com.

molex

MX150 2X10 BLADE SEALED ASSEMBLY MAT SEAL
BOM AND PIN OUT SHEET

ASSEMBLY DESCRIPTION	ASSEMBLY PART NUMBER	COMPONENT				BLOCKED TERMINALS										STATUS	COMMENT	OPTIONAL ATTACHMENTS SOLD SEPARATELY			
		THE PRESENCE OF AN ABBREVIATION INDICATES THE PRESENCE OF THAT COMPONENT				CAVITY WITH A NUMBER INDICATES BLOCKED TERMINAL POSITION CAVITY WITHOUT A NUMBER INDICATES OPEN TERMINAL POSITION												BACKSHELL WITH RIBS	BACKSHELL WITHOUT RIBS	90° ADAPTOR WITH RIBS	90° ADAPTOR WITHOUT RIBS
		HOUSING KEY/COLOR	GROMMET CAP	PLR	MAT SEAL																
MX150 ASSY BLD 2X10 BK A/12	334822046	A-BLACK	GCP	PLR	M-R	1	-	-	-	-	-	-	-	-	-	OBSOLETE	SEE PN 334822146	34950-2011	34950-2021	34951-1631	34951-1641
		-	12	-	-	15	16	17	18	19	20										
MX150 ASSY BLD 2X10 BK A/10	334822047	A-BLACK	GCP	PLR	M-R	-	-	3	4	5	-	-	-	-	10	OBSOLETE	SEE PN 334822147	34950-2011	34950-2021	34951-1631	34951-1641
		-	-	13	14	15	-	17	18	19	-										
MX150 ASSY BLD 2X10 BK A/2	334822048	A-BLACK	GCP	PLR	M-R	1	2	3	4	5	6	7	8	9	-	OBSOLETE	SEE PN 334822148	34950-2011	34950-2021	34951-1631	34951-1641
		11	12	13	14	15	16	-	18	19	20										
MX150 ASSY BLD 2X10 BK A/11	334822049	A-BLACK	GCP	PLR	M-R	-	-	3	4	5	6	-	8	9	-	OBSOLETE	SEE PN 334822149	34950-2011	34950-2021	34951-1631	34951-1641
		-	-	-	-	-	-	-	18	19	20										
MX150 ASSY BLD 2X10 BK A/4	334822050	A-BLACK	GCP	PLR	M-R	1	2	3	4	5	6	-	-	-	-	OBSOLETE	SEE PN 334822150	34950-2011	34950-2021	34951-1631	34951-1641
		11	12	13	14	15	16	17	18	19	20										
MX150 ASSY BLD 2X10 BK A/10	334822051	A-BLACK	GCP	PLR	M-R	-	-	-	-	-	-	-	-	-	-	OBSOLETE	SEE PN 334822151	34950-2011	34950-2021	34951-1631	34951-1641
		11	12	13	14	15	16	17	18	19	20										
MX150 ASSY BLD 2X10 BK A/0	334822052	A-BLACK	GCP	PLR	M-R	1	2	3	4	5	6	7	8	9	10	OBSOLETE	SEE PN 334822152	34950-2011	34950-2021	34951-1631	34951-1641
		11	12	13	14	15	16	17	18	19	20										
MX150 ASSY BLD 2X10 BK A/14	334822053	A-BLACK	GCP	PLR	M-R	-	-	3	-	-	-	-	8	9	-	OBSOLETE	SEE PN 334822153	34950-2011	34950-2021	34951-1631	34951-1641
		-	-	-	-	-	-	-	18	19	20										
MX150 ASSY BLD 2X10 DG C/20	334822054	C-DARK GRAY	GCO	PLR	M-R	-	-	-	-	-	-	-	-	-	-	OBSOLETE	SEE PN 334822154	34950-2011	34950-2021	34951-1631	34951-1641
		-	-	-	-	-	-	-	-	-	-										
MX150 ASSY BLD 2X10 SG D/20	334822055	D-STONE GRAY	GCO	PLR	M-R	-	-	-	-	-	-	-	-	-	-	OBSOLETE	SEE PN 334822155	34950-2011	34950-2021	34951-1631	34951-1641
		-	-	-	-	-	-	-	-	-	-										
MX150 ASSY BLD 2X10 LG B/16	334822056	B-LIGHT GRAY	GCP	PLR	M-R	-	-	3	-	5	-	-	-	9	10	OBSOLETE	SEE PN 334822156	34950-2011	34950-2021	34951-1631	34951-1641
		-	-	-	-	-	-	-	-	-	-										
MX150 ASSY BLD 2X10 LG B/5	334822057	B-LIGHT GRAY	GCP	PLR	M-R	-	-	3	4	5	-	-	-	9	10	OBSOLETE	SEE PN 334822157	34950-2011	34950-2021	34951-1631	34951-1641
		11	12	13	14	15	16	17	18	19	20										
MX150 ASSY BLD 2X10 LG B/12	334822058	B-LIGHT GRAY	GCP	PLR	M-R	-	-	3	-	5	-	-	-	9	10	OBSOLETE	SEE PN 334822158	34950-2011	34950-2021	34951-1631	34951-1641
		11	12	13	14	-	-	-	-	-	-										
MX150 ASSY BLD 2X10 LG B/11	334822059	B-LIGHT GRAY	GCP	PLR	M-R	-	-	3	4	5	6	-	8	9	10	OBSOLETE	SEE PN 334822159	34950-2011	34950-2021	34951-1631	34951-1641
		-	-	-	14	-	-	-	-	19	-										
MX150 ASSY BLD 2X10 BK A/10	334822060	A-BLACK	GCP	PLR	M-R	-	-	-	4	5	-	-	8	-	-	OBSOLETE	SEE PN 334822160	34950-2011	34950-2021	34951-1631	34951-1641
		-	12	-	-	15	16	17	18	19	20										
MX150 ASSY BLD 2X10 BK A/12	334822061	A-BLACK	GCP	PLR	M-R	-	-	-	4	5	-	-	8	-	-	OBSOLETE	SEE PN 334822161	34950-2011	34950-2021	34951-1631	34951-1641
		-	12	-	-	-	-	17	18	19	20										
MX150 ASSY BLD 2X10 YW A/9	334822062	A-YELLOW	GCP	PLR	M-R	-	-	3	-	-	6	7	8	9	10	OBSOLETE	SEE PN 334822162	34950-2011	34950-2021	34951-1631	34951-1641
		11	12	13	14	-	-	-	18	-	-										
MX150 ASSY BLD 2X10 YW A/11	334822063	A-YELLOW	GCP	PLR	M-R	-	-	3	-	-	6	7	8	9	10	OBSOLETE	SEE PN 334822163	34950-2011	34950-2021	34951-1631	34951-1641
		-	12	13	14	-	-	-	-	-	-										
MX150 ASSY BLD 2X10 YW A/15	334822064	A-YELLOW	GCP	PLR	M-R	-	-	3	-	-	-	7	-	-	10	OBSOLETE	SEE PN 334822164	34950-2011	34950-2021	34951-1631	34951-1641
		-	-	-	14	15	-	-	-	-	-										
MX150 ASSY BLD 2X10 YW A/2	334822065	A-YELLOW	GCP	PLR	M-R	-	-	3	4	5	6	7	8	9	10	OBSOLETE	SEE PN 334822165	34950-2011	34950-2021	34951-1631	34951-1641
		11	12	13	14	15	16	17	18	19	20										
MX150 ASSY BLD 2X10 YW A/7	334822066	A-YELLOW	GCP	PLR	M-R	-	-	3	4	5	6	7	8	9	10	OBSOLETE	SEE PN 334822166	34950-2011	34950-2021	34951-1631	34951-1641
		11	12	13	14	-	-	-	18	-	-										
MX150 ASSY BLD 2X10 YW A/14	334822067	A-YELLOW	GCP	PLR	M-R	-	-	3	-	-	-	7	8	9	10	OBSOLETE	SEE PN 334822167	34950-2011	34950-2021	34951-1631	34951-1641
		-	-	-	14	-	-	-	-	-	-										
MX150 ASSY BLD 2X10 BK A/12	334822068	A-BLACK	GCP	PLR	M-R	-	-	3	4	5	-	7	-	-	-	OBSOLETE	SEE PN 334822168	34950-2011	34950-2021	34951-1631	34951-1641
		-	-	13	-	15	-	-	18	19	-										
MX150 ASSY BLD 2X10 BK A/14	334822069	A-BLACK	GCP	PLR	M-R	-	-	-	-	-	-	7	-	-	10	OBSOLETE	SEE PN 334822169	34950-2011	34950-2021	34951-1631	34951-1641
		-	-	-	14	-	-	17	18	19	-										
MX150 ASSY BLD 2X10 BK A/11	334822070	A-BLACK	GCP	PLR	M-R	-	2	3	4	5	-	-	-	-	-	OBSOLETE	SEE PN 334822170	34950-2011	34950-2021	34951-1631	34951-1641
		-	-	-	14	-	-	17	18	19	20										
MX150 ASSY BLD 2X10 BK A/17	334822071	A-BLACK	GCP	PLR	M-R	-	-	-	-	-	-	-	-	-	-	OBSOLETE	SEE PN 334822171	34950-2011	34950-2021	34951-1631	34951-1641
		11	-	-	-	-	-	17	-	19	-										
MX150 ASSY BLD 2X10 BK A/9	334822072	A-BLACK	GCP	PLR	M-R	1	2	3	4	5	6	7	8	-	-	OBSOLETE	SEE PN 334822172	34950-2011	34950-2021	34951-1631	34951-1641
		11	-	-	-	-	-	17	-	19	-										

Downloaded from Arrow.com.

molex

MX150 2X10 BLADE SEALED ASSEMBLY MAT SEAL
BOM AND PIN OUT SHEET

ASSEMBLY DESCRIPTION	ASSEMBLY PART NUMBER	COMPONENT				BLOCKED TERMINALS										STATUS	COMMENT	OPTIONAL ATTACHMENTS SOLD SEPARATELY			
		THE PRESENCE OF AN ABBREVIATION INDICATES THE PRESENCE OF THAT COMPONENT				CAVITY WITH A NUMBER INDICATES BLOCKED TERMINAL POSITION CAVITY WITHOUT A NUMBER INDICATES OPEN TERMINAL POSITION												BACKSHELL WITH RIBS	BACKSHELL WITHOUT RIBS	90° ADAPTOR WITH RIBS	90° ADAPTOR WITHOUT RIBS
		HOUSING KEY/COLOR	GROMMET CAP	PLR	MAT SEAL																
MX150 ASSY BLD 2X10 BK A/18	334822073	A-BLACK	GCP	PLR	M-R	-	-	-	-	-	-	-	8	-	-	OBSOLETE	SEE PN 334822173	34950-2011	34950-2021	34951-1631	34951-1641
						-	-	-	-	15	-	-	-	-	-						
MX150 ASSY BLD 2X10 BK A/15	334822074	A-BLACK	GCP	PLR	M-R	1	-	-	-	-	-	-	8	-	10	OBSOLETE	SEE PN 334822174	34950-2011	34950-2021	34951-1631	34951-1641
						-	-	-	-	15	-	17	-	-	-						
MX150 ASSY BLD 2X10 BK A/14	334822075	A-BLACK	GCP	PLR	M-R	1	-	-	-	-	-	-	8	9	-	OBSOLETE	SEE PN 334822175	34950-2011	34950-2021	34951-1631	34951-1641
						11	-	-	-	-	-	-	-	19	20						
MX150 ASSY BLD 2X10 BK A/17	334822076	A-BLACK	GCP	PLR	M-R	-	-	-	-	-	-	-	-	-	10	OBSOLETE	SEE PN 334822176	34950-2011	34950-2021	34951-1631	34951-1641
						-	-	-	-	-	-	-	-	19	20						
MX150 ASSY BLD 2X10 BK A/16	334822077	A-BLACK	GCP	PLR	M-R	-	-	-	-	-	-	-	-	-	-	OBSOLETE	SEE PN 334822177	34950-2011	34950-2021	34951-1631	34951-1641
						-	-	13	-	-	16	-	-	19	20						
MX150 ASSY BLD 2X10 BK A/18	334822078	A-BLACK	GCP	PLR	M-R	-	-	-	4	-	-	-	-	-	-	OBSOLETE	SEE PN 334822178	34950-2011	34950-2021	34951-1631	34951-1641
						-	-	-	14	-	-	-	-	-	-						
MX150 ASSY BLD 2X10 BK A/6	334822079	A-BLACK	GCP	PLR	M-R	-	-	-	4	5	6	7	8	9	10	OBSOLETE	SEE PN 334822179	34950-2011	34950-2021	34951-1631	34951-1641
						-	-	-	14	15	16	17	18	19	20						
MX150 ASSY BLD 2X10 BK A/11	334822080	A-BLACK	GCP	PLR	M-R	1	-	-	-	-	-	-	8	-	10	OBSOLETE	SEE PN 334822180	34950-2011	34950-2021	34951-1631	34951-1641
						11	12	13	14	15	-	17	-	-	-						
MX150 ASSY BLD 2X10 BK A/9	334822081	A-BLACK	GCP	PLR	M-R	1	-	3	4	-	-	-	8	9	-	OBSOLETE	SEE PN 334822181	34950-2011	34950-2021	34951-1631	34951-1641
						11	-	13	14	-	-	-	18	19	20						
MX150 ASSY BLD 2X10 BK A/8	334822082	A-BLACK	GCP	PLR	M-R	1	-	3	4	-	-	-	8	9	10	OBSOLETE	SEE PN 334822182	34950-2011	34950-2021	34951-1631	34951-1641
						11	-	13	14	-	-	-	18	19	20						
MX150 ASSY BLD 2X10 BK A/13	334822083	A-BLACK	GCP	PLR	M-R	1	-	-	-	-	-	-	8	9	10	OBSOLETE	SEE PN 334822183	34950-2011	34950-2021	34951-1631	34951-1641
						11	-	-	-	-	-	-	-	19	20						
MX150 ASSY BLD 2X10 BK A/17	334822084	A-BLACK	GCP	PLR	M-R	1	-	-	-	-	-	-	-	9	-	OBSOLETE	SEE PN 334822184	34950-2011	34950-2021	34951-1631	34951-1641
						-	12	-	-	-	-	-	-	-	-						
MX150 ASSY BLD 2X10 BK A/18	334822085	A-BLACK	GCP	PLR	M-R	1	-	-	-	-	-	-	-	-	-	OBSOLETE	SEE PN 334822185	34950-2011	34950-2021	34951-1631	34951-1641
						-	-	-	-	-	-	-	-	19	-						
MX150 ASSY BLD 2X10 BK A/14	334822086	A-BLACK	GCP	PLR	M-R	-	2	3	-	5	-	-	-	-	-	OBSOLETE	SEE PN 334822186	34950-2011	34950-2021	34951-1631	34951-1641
						-	-	-	14	-	-	-	-	19	20						
MX150 ASSY BLD 2X10 BK A/16	334822087	A-BLACK	GCP	PLR	M-R	1	-	-	-	-	-	-	-	-	-	OBSOLETE	SEE PN 334822187	34950-2011	34950-2021	34951-1631	34951-1641
						-	12	13	-	-	-	-	-	19	-						
MX150 ASSY BLD 2X10 BK A/11	334822088	A-BLACK	GCP	PLR	M-R	1	-	-	-	5	6	7	8	-	-	OBSOLETE	SEE PN 334822188	34950-2011	34950-2021	34951-1631	34951-1641
						-	12	13	-	15	-	-	-	19	-						
MX150 ASSY BLD 2X10 BK A/5	334822089	A-BLACK	GCP	PLR	M-R	1	2	3	4	5	6	7	8	9	-	OBSOLETE	SEE PN 334822189	34950-2011	34950-2021	34951-1631	34951-1641
						-	12	13	14	15	16	-	-	19	-						
MX150 ASSY BLD 2X10 BK A/2	334822090	A-BLACK	GCP	PLR	M-R	1	2	3	4	5	6	7	8	9	10	OBSOLETE	SEE PN 334822190	34950-2011	34950-2021	34951-1631	34951-1641
						11	12	13	14	15	16	-	-	19	20						
MX150 ASSY BLD 2X10 BK A/20	334822101	A-BLACK	GCO	PLR	M-B	-	-	-	-	-	-	-	-	-	-	SALEABLE		34950-2011	34950-2021	34951-1631	34951-1641
						-	-	-	-	-	-	-	-	-	-						
MX150 ASSY BLD 2X10 LG B/20	334822102	B-LIGHT GRAY	GCO	PLR	M-B	-	-	-	-	-	-	-	-	-	-	SALEABLE		34950-2011	34950-2021	34951-1631	34951-1641
						-	-	-	-	-	-	-	-	-	-						
MX150 ASSY BLD 2X10 BR C/20	334822103	C-BROWN	GCO	PLR	M-B	-	-	-	-	-	-	-	-	-	-	NOT RECOMMENDED	SEE PN 334822154	34950-2011	34950-2021	34951-1631	34951-1641
						-	-	-	-	-	-	-	-	-	-						
MX150 ASSY BLD 2X10 GR D/20	334822104	D-GREEN	GCO	PLR	M-B	-	-	-	-	-	-	-	-	-	-	NOT RECOMMENDED	SEE PN 334822155	34950-2011	34950-2021	34951-1631	34951-1641
						-	-	-	-	-	-	-	-	-	-						
MX150 ASSY BLD 2X10 BK A/19	334822106	A-BLACK	GCP	PLR	M-B	-	-	-	-	-	-	-	-	-	-	SALEABLE		34950-2011	34950-2021	34951-1631	34951-1641
						-	-	-	-	-	-	-	-	-	20						
MX150 ASSY BLD 2X10 BK A/19	334822107	A-BLACK	GCP	PLR	M-B	-	-	-	-	-	-	-	-	-	-	SALEABLE		34950-2011	34950-2021	34951-1631	34951-1641
						11	-	-	-	-	-	-	-	-	-						
MX150 ASSY BLD 2X10 BK A/12	334822108	A-BLACK	GCP	PLR	M-B	-	-	-	4	5	6	7	-	-	-	SALEABLE		34950-2011	34950-2021	34951-1631	34951-1641
						-	-	-	14	15	16	17	-	-	-						
MX150 ASSY BLD 2X10 BK A/18	334822109	A-BLACK	GCP	PLR	M-B	-	-	-	-	-	-	7	-	-	-	SALEABLE		34950-2011	34950-2021	34951-1631	34951-1641
						-	-	-	-	-	16	-	-	-	-						
MX150 ASSY BLD 2X10 BK A/16	334822110	A-BLACK	GCP	PLR	M-B	-	-	-	-	-	-	-	-	-	10	SALEABLE		34950-2011	34950-2021	34951-1631	34951-1641
						11	12	-	-	-	-	-	-	-	20						

Downloaded from Arrow.com.

molex

MX150 2X10 BLADE SEALED ASSEMBLY MAT SEAL
BOM AND PIN OUT SHEET

ASSEMBLY DESCRIPTION	ASSEMBLY PART NUMBER	COMPONENT				BLOCKED TERMINALS										STATUS	COMMENT	OPTIONAL ATTACHMENTS SOLD SEPARATELY			
		THE PRESENCE OF AN ABBREVIATION INDICATES THE PRESENCE OF THAT COMPONENT				CAVITY WITH A NUMBER INDICATES BLOCKED TERMINAL POSITION CAVITY WITHOUT A NUMBER INDICATES OPEN TERMINAL POSITION												BACKSHELL WITH RIBS	BACKSHELL WITHOUT RIBS	90^0 ADAPTOR WITH RIBS	90^0 ADAPTOR WITHOUT RIBS
		HOUSING KEY/COLOR	GROMMET CAP	PLR	MAT SEAL																
MX150 ASSY BLD 2X10 BK A/17	334822111	A-BLACK	GCP	PLR	M-B	1	2	-	-	-	-	-	-	-	-	SALEABLE		34950-2011	34950-2021	34951-1631	34951-1641
						-	-	-	-	-	-	-	-	-	20						
MX150 ASSY BLD 2X10 BK A/14	334822112	A-BLACK	GCP	PLR	M-B	1	2	-	-	-	-	-	-	-	10	SALEABLE		34950-2011	34950-2021	34951-1631	34951-1641
						11	12	-	-	-	-	-	-	-	20						
MX150 ASSY BLD 2X10 BK A/12	334822113	A-BLACK	GCP	PLR	M-B	1	2	-	-	-	-	-	-	-	10	SALEABLE		34950-2011	34950-2021	34951-1631	34951-1641
						11	12	13	14	-	-	-	-	-	20						
MX150 ASSY BLD 2X10 BK A/14	334822114	A-BLACK	GCP	PLR	M-B	-	-	3	4	5	-	-	-	-	-	SALEABLE		34950-2011	34950-2021	34951-1631	34951-1641
						-	-	-	14	-	-	17	-	19	-						
MX150 ASSY BLD 2X10 BK A/16	334822115	A-BLACK	GCP	PLR	M-B	-	-	3	4	5	-	-	-	-	-	SALEABLE		34950-2011	34950-2021	34951-1631	34951-1641
						-	-	-	-	-	-	17	-	-	-						
MX150 ASSY BLD 2X10 BK A/16	334822116	A-BLACK	GCP	PLR	M-B	-	2	-	-	-	-	-	-	-	-	SALEABLE		34950-2011	34950-2021	34951-1631	34951-1641
						-	-	-	-	-	-	-	18	19	20						
MX150 ASSY BLD 2X10 BK A/17	334822117	A-BLACK	GCP	PLR	M-B	-	-	-	-	-	-	-	-	-	-	SALEABLE		34950-2011	34950-2021	34951-1631	34951-1641
						-	-	-	-	-	-	-	18	19	20						
MX150 ASSY BLD 2X10 BK A/15	334822118	A-BLACK	GCP	PLR	M-B	-	-	-	-	-	-	-	-	-	10	SALEABLE		34950-2011	34950-2021	34951-1631	34951-1641
						-	12	13	14	-	-	-	-	19	-						
MX150 ASSY BLD 2X10 BK A/15	334822119	A-BLACK	GCP	PLR	M-B	-	-	3	4	-	-	-	-	-	-	SALEABLE		34950-2011	34950-2021	34951-1631	34951-1641
						-	-	-	14	-	-	17	-	19	-						
MX150 ASSY BLD 2X10 BK A/12	334822120	A-BLACK	GCP	PLR	M-B	-	-	3	4	5	-	-	-	-	-	SALEABLE		34950-2011	34950-2021	34951-1631	34951-1641
						-	-	-	14	-	-	17	18	19	20						
MX150 ASSY BLD 2X10 BK A/9	334822121	A-BLACK	GCP	PLR	M-B	1	2	3	4	5	-	-	-	-	10	SALEABLE		34950-2011	34950-2021	34951-1631	34951-1641
						-	-	-	14	-	-	17	18	19	20						
MX150 ASSY BLD 2X10 BK A/14	334822122	A-BLACK	GCP	PLR	M-B	-	-	3	4	-	-	-	-	-	10	SALEABLE		34950-2011	34950-2021	34951-1631	34951-1641
						-	-	-	14	-	-	17	-	19	-						
MX150 ASSY BLD 2X10 BK A/13	334822123	A-BLACK	GCP	PLR	M-B	-	-	-	-	-	-	-	-	-	10	SALEABLE		34950-2011	34950-2021	34951-1631	34951-1641
						11	12	-	-	15	16	17	-	-	20						
MX150 ASSY BLD 2X10 BK A/16	334822124	A-BLACK	GCP	PLR	M-B	-	-	-	-	-	-	-	-	-	-	SALEABLE		34950-2011	34950-2021	34951-1631	34951-1641
						-	-	-	-	15	16	17	-	-	20						
MX150 ASSY BLD 2X10 BK A/16	334822125	A-BLACK	GCP	PLR	M-B	-	-	-	-	-	-	-	-	-	10	SALEABLE		34950-2011	34950-2021	34951-1631	34951-1641
						-	-	-	14	-	-	17	-	19	-						
MX150 ASSY BLD 2X10 BK A/13	334822126	A-BLACK	GCP	PLR	M-B	-	-	-	4	5	-	-	-	-	10	SALEABLE		34950-2011	34950-2021	34951-1631	34951-1641
						-	-	-	14	15	-	17	-	19	-						
MX150 ASSY BLD 2X10 BK A/12	334822127	A-BLACK	GCP	PLR	M-B	-	-	-	4	5	-	-	-	-	10	SALEABLE		34950-2011	34950-2021	34951-1631	34951-1641
						-	-	-	14	15	-	17	18	19	-						
MX150 ASSY BLD 2X10 BK A/2	334822128	A-BLACK	GCP	PLR	M-B	1	-	3	4	5	6	7	8	9	10	SALEABLE		34950-2011	34950-2021	34951-1631	34951-1641
						11	-	13	14	15	16	17	18	19	20						
MX150 ASSY BLD 2X10 BK A/14	334822129	A-BLACK	GCP	PLR	M-B	-	-	-	4	5	6	7	-	-	-	SALEABLE		34950-2011	34950-2021	34951-1631	34951-1641
						-	-	-	-	-	16	17	-	-	-						
MX150 ASSY BLD 2X10 BK A/12	334822130	A-BLACK	GCP	PLR	M-B	-	-	3	4	5	-	-	-	-	-	SALEABLE		34950-2011	34950-2021	34951-1631	34951-1641
						-	-	13	14	15	-	-	18	19	-						
MX150 ASSY BLD 2X10 BK A/17	334822131	A-BLACK	GCP	PLR	M-B	-	-	-	4	-	-	7	-	-	-	SALEABLE		34950-2011	34950-2021	34951-1631	34951-1641
						-	-	-	-	-	16	-	-	-	-						
MX150 ASSY BLD 2X10 BK A/13	334822132	A-BLACK	GCP	PLR	M-B	-	-	3	4	5	-	-	-	-	-	SALEABLE		34950-2011	34950-2021	34951-1631	34951-1641
						-	-	13	-	15	-	-	18	19	-						
MX150 ASSY BLD 2X10 BK A/17	334822133	A-BLACK	GCP	PLR	M-B	-	-	-	-	-	-	-	-	-	10	SALEABLE		34950-2011	34950-2021	34951-1631	34951-1641
						-	-	-	-	-	-	17	-	19	-						
MX150 ASSY BLD 2X10 BK A/16	334822134	A-BLACK	GCP	PLR	M-B	-	-	-	-	-	-	-	-	-	-	SALEABLE		34950-2011	34950-2021	34951-1631	34951-1641
						-	-	-	-	-	-	17	18	19	20						
MX150 ASSY BLD 2X10 BK A/15	334822135	A-BLACK	GCP	PLR	M-B	-	-	-	-	-	-	-	-	-	-	SALEABLE		34950-2011	34950-2021	34951-1631	34951-1641
						-	-	-	-	-	16	17	18	19	20						
MX150 ASSY BLD 2X10 BK A/14	334822136	A-BLACK	GCP	PLR	M-B	-	-	-	-	-	-	7	-	9	-	SALEABLE		34950-2011	34950-2021	34951-1631	34951-1641
						-	-	-	-	-	-	17	18	19	20						
MX150 ASSY BLD 2X10 BK A/18	334822137	A-BLACK	GCP	PLR	M-B	-	-	-	-	-	-	7	-	9	-	SALEABLE		34950-2011	34950-2021	34951-1631	34951-1641
						-	-	-	-	-	-	-	-	-	-						

Downloaded from Arrow.com.

molex

MX150 2X10 BLADE SEALED ASSEMBLY MAT SEAL
BOM AND PIN OUT SHEET

ASSEMBLY DESCRIPTION	ASSEMBLY PART NUMBER	COMPONENT				BLOCKED TERMINALS										STATUS	COMMENT	OPTIONAL ATTACHMENTS SOLD SEPARATELY			
		THE PRESENCE OF AN ABBREVIATION INDICATES THE PRESENCE OF THAT COMPONENT				CAVITY WITH A NUMBER INDICATES BLOCKED TERMINAL POSITION CAVITY WITHOUT A NUMBER INDICATES OPEN TERMINAL POSITION												BACKSHELL WITH RIBS	BACKSHELL WITHOUT RIBS	90^0 ADAPTOR WITH RIBS	90^0 ADAPTOR WITHOUT RIBS
		HOUSING KEY/COLOR	GROMMET CAP	PLR	MAT SEAL																
MX150 ASSY BLD 2X10 BK A/7	334822138	A-BLACK	GCP	PLR	M-B	1	2	3	4	5	6	7	8	9	10	SALEABLE		34950-2011	34950-2021	34951-1631	34951-1641
						-	12	-	-	-	-	17	-	19	-						
MX150 ASSY BLD 2X10 BK A/9	334822139	A-BLACK	GCP	PLR	M-B	1	2	3	4	5	6	7	8	-	10	SALEABLE		34950-2011	34950-2021	34951-1631	34951-1641
						-	-	-	-	-	-	17	-	19	-						
MX150 ASSY BLD 2X10 BK A/17	334822140	A-BLACK	GCP	PLR	M-B	-	-	-	-	-	-	7	-	-	-	SALEABLE		34950-2011	34950-2021	34951-1631	34951-1641
						-	-	-	-	-	-	17	-	-	20						
MX150 ASSY BLD 2X10 YW A/20	334822141	A-YELLOW	GCO	PLR	M-B	-	-	-	-	-	-	-	-	-	-	SALEABLE		34950-2011	34950-2021	34951-1631	34951-1641
						-	-	-	-	-	-	-	-	-	-						
MX150 ASSY BLD 2X10 BK A/15	334822142	A-BLACK	GCP	PLR	M-B	-	-	-	-	-	-	-	-	-	10	SALEABLE		34950-2011	34950-2021	34951-1631	34951-1641
						-	-	-	14	-	-	17	18	19	-						
MX150 ASSY BLD 2X10 BK A/15	334822143	A-BLACK	GCP	PLR	M-B	-	2	-	4	-	-	-	-	-	-	SALEABLE		34950-2011	34950-2021	34951-1631	34951-1641
						11	12	-	14	-	-	-	-	-	-						
MX150 ASSY BLD 2X10 BK A/18	334822144	A-BLACK	GCP	PLR	M-B	-	-	-	-	-	-	-	-	-	-	SALEABLE		34950-2011	34950-2021	34951-1631	34951-1641
						-	-	-	-	-	-	-	18	19	-						
MX150 ASSY BLD 2X10 BK A/18	334822145	A-BLACK	GCP	PLR	M-B	-	-	-	-	-	-	-	-	9	10	SALEABLE		34950-2011	34950-2021	34951-1631	34951-1641
						-	-	-	-	-	-	-	-	-	-						
MX150 ASSY BLD 2X10 BK A/12	334822146	A-BLACK	GCP	PLR	M-B	1	-	-	-	-	-	-	-	-	-	SALEABLE		34950-2011	34950-2021	34951-1631	34951-1641
						-	12	-	-	15	16	17	18	19	20						
MX150 ASSY BLD 2X10 BK A/10	334822147	A-BLACK	GCP	PLR	M-B	-	-	3	4	5	-	-	-	-	10	SALEABLE		34950-2011	34950-2021	34951-1631	34951-1641
						-	-	13	14	15	-	17	18	19	-						
MX150 ASSY BLD 2X10 BK A/2	334822148	A-BLACK	GCP	PLR	M-B	1	2	3	4	5	6	7	8	9	-	SALEABLE		34950-2011	34950-2021	34951-1631	34951-1641
						11	12	13	14	15	16	-	18	19	20						
MX150 ASSY BLD 2X10 BK A/11	334822149	A-BLACK	GCP	PLR	M-B	-	-	3	4	5	6	-	8	9	-	SALEABLE		34950-2011	34950-2021	34951-1631	34951-1641
						-	-	-	-	-	-	-	18	19	20						
MX150 ASSY BLD 2X10 BK A/4	334822150	A-BLACK	GCP	PLR	M-B	1	2	3	4	5	6	-	-	-	-	SALEABLE		34950-2011	34950-2021	34951-1631	34951-1641
						11	12	13	14	15	16	17	18	19	20						
MX150 ASSY BLD 2X10 BK A/10	334822151	A-BLACK	GCP	PLR	M-B	-	-	-	-	-	-	-	-	-	-	SALEABLE		34950-2011	34950-2021	34951-1631	34951-1641
						11	12	13	14	15	16	17	18	19	20						
MX150 ASSY BLD 2X10 BK A/0	334822152	A-BLACK	GCP	PLR	M-B	1	2	3	4	5	6	7	8	9	10	SALEABLE		34950-2011	34950-2021	34951-1631	34951-1641
						11	12	13	14	15	16	17	18	19	20						
MX150 ASSY BLD 2X10 BK A/14	334822153	A-BLACK	GCP	PLR	M-B	-	-	3	-	-	-	-	8	9	-	SALEABLE		34950-2011	34950-2021	34951-1631	34951-1641
						-	-	-	-	-	-	-	18	19	20						
MX150 ASSY BLD 2X10 DG C/20	334822154	C-DARK GRAY	GCO	PLR	M-B	-	-	-	-	-	-	-	-	-	-	SALEABLE		34950-2011	34950-2021	34951-1631	34951-1641
						-	-	-	-	-	-	-	-	-	-						
MX150 ASSY BLD 2X10 SG D/20	334822155	D-STONE GRAY	GCO	PLR	M-B	-	-	-	-	-	-	-	-	-	-	SALEABLE		34950-2011	34950-2021	34951-1631	34951-1641
						-	-	-	-	-	-	-	-	-	-						
MX150 ASSY BLD 2X10 LG B/16	334822156	B-LIGHT GRAY	GCP	PLR	M-B	-	-	3	-	5	-	-	-	9	10	SALEABLE		34950-2011	34950-2021	34951-1631	34951-1641
						-	-	-	-	-	-	-	-	-	-						
MX150 ASSY BLD 2X10 LG B/5	334822157	B-LIGHT GRAY	GCP	PLR	M-B	-	-	3	4	5	-	-	-	9	10	SALEABLE		34950-2011	34950-2021	34951-1631	34951-1641
						11	12	13	14	15	16	17	18	19	20						
MX150 ASSY BLD 2X10 LG B/12	334822158	B-LIGHT GRAY	GCP	PLR	M-B	-	-	3	-	5	-	-	-	9	10	SALEABLE		34950-2011	34950-2021	34951-1631	34951-1641
						11	12	13	14	-	-	-	-	-	-						
MX150 ASSY BLD 2X10 LG B/11	334822159	B-LIGHT GRAY	GCP	PLR	M-B	-	-	3	4	5	6	-	8	9	10	SALEABLE		34950-2011	34950-2021	34951-1631	34951-1641
						-	-	-	14	-	-	-	-	19	-						
MX150 ASSY BLD 2X10 BK A/10	334822160	A-BLACK	GCP	PLR	M-B	-	-	-	4	5	-	-	8	-	-	SALEABLE		34950-2011	34950-2021	34951-1631	34951-1641
						-	12	-	-	15	16	17	18	19	20						
MX150 ASSY BLD 2X10 BK A/12	334822161	A-BLACK	GCP	PLR	M-B	-	-	-	4	5	-	-	8	-	-	SALEABLE		34950-2011	34950-2021	34951-1631	34951-1641
						-	12	-	-	-	-	17	18	19	20						
MX150 ASSY BLD 2X10 YW A/9	334822162	A-YELLOW	GCP	PLR	M-B	-	-	3	-	-	6	7	8	9	10	SALEABLE		34950-2011	34950-2021	34951-1631	34951-1641
						11	12	13	14	-	-	-	18	-	-						
MX150 ASSY BLD 2X10 YW A/11	334822163	A-YELLOW	GCP	PLR	M-B	-	-	3	-	-	6	7	8	9	10	SALEABLE		34950-2011	34950-2021	34951-1631	34951-1641
						-	12	13	14	-	-	-	-	-	-						
MX150 ASSY BLD 2X10 YW A/15	334822164	A-YELLOW	GCP	PLR	M-B	-	-	3	-	-	-	7	-	-	10	SALEABLE		34950-2011	34950-2021	34951-1631	34951-1641
						-	-	-	14	15	-	-	-	-	-						

Downloaded from Arrow.com.

molex

MX150 2X10 BLADE SEALED ASSEMBLY MAT SEAL
BOM AND PIN OUT SHEET

ASSEMBLY DESCRIPTION	ASSEMBLY PART NUMBER	COMPONENT				BLOCKED TERMINALS										STATUS	COMMENT	OPTIONAL ATTACHMENTS SOLD SEPARATELY			
		THE PRESENCE OF AN ABBREVIATION INDICATES THE PRESENCE OF THAT COMPONENT				CAVITY WITH A NUMBER INDICATES BLOCKED TERMINAL POSITION CAVITY WITHOUT A NUMBER INDICATES OPEN TERMINAL POSITION												BACKSHELL WITH RIBS	BACKSHELL WITHOUT RIBS	90^0 ADAPTOR WITH RIBS	90^0 ADAPTOR WITHOUT RIBS
		HOUSING KEY/COLOR	GROMMET CAP	PLR	MAT SEAL																
MX150 ASSY BLD 2X10 YW A/2	334822165	A-YELLOW	GCP	PLR	M-B	-	-	3	4	5	6	7	8	9	10	SALEABLE		34950-2011	34950-2021	34951-1631	34951-1641
						11	12	13	14	15	16	17	18	19	20						
MX150 ASSY BLD 2X10 YW A/7	334822166	A-YELLOW	GCP	PLR	M-B	-	-	3	4	5	6	7	8	9	10	SALEABLE		34950-2011	34950-2021	34951-1631	34951-1641
						11	12	13	14	-	-	-	18	-	-						
MX150 ASSY BLD 2X10 YW A/14	334822167	A-YELLOW	GCP	PLR	M-B	-	-	3	-	-	-	7	8	9	10	SALEABLE		34950-2011	34950-2021	34951-1631	34951-1641
						-	-	-	14	-	-	-	-	-	-						
MX150 ASSY BLD 2X10 BK A/12	334822168	A-BLACK	GCP	PLR	M-B	-	-	3	4	5	-	7	-	-	-	SALEABLE		34950-2011	34950-2021	34951-1631	34951-1641
						-	-	13	-	15	-	-	18	19	-						
MX150 ASSY BLD 2X10 BK A/14	334822169	A-BLACK	GCP	PLR	M-B	-	-	-	-	-	-	7	-	-	10	SALEABLE		34950-2011	34950-2021	34951-1631	34951-1641
						-	-	-	14	-	-	17	18	19	-						
MX150 ASSY BLD 2X10 BK A/11	334822170	A-BLACK	GCP	PLR	M-B	-	2	3	4	5	-	-	-	-	-	SALEABLE		34950-2011	34950-2021	34951-1631	34951-1641
						-	-	-	14	-	-	17	18	19	20						
MX150 ASSY BLD 2X10 BK A/17	334822171	A-BLACK	GCP	PLR	M-B	-	-	-	-	-	-	-	-	-	-	SALEABLE		34950-2011	34950-2021	34951-1631	34951-1641
						11	-	-	-	-	-	17	-	19	-						
MX150 ASSY BLD 2X10 BK A/9	334822172	A-BLACK	GCP	PLR	M-B	1	2	3	4	5	6	7	8	-	-	SALEABLE		34950-2011	34950-2021	34951-1631	34951-1641
						11	-	-	-	-	-	17	-	19	-						
MX150 ASSY BLD 2X10 BK A/18	334822173	A-BLACK	GCP	PLR	M-B	-	-	-	-	-	-	-	8	-	-	SALEABLE		34950-2011	34950-2021	34951-1631	34951-1641
						-	-	-	-	15	-	-	-	-	-						
MX150 ASSY BLD 2X10 BK A/15	334822174	A-BLACK	GCP	PLR	M-B	1	-	-	-	-	-	-	8	-	10	SALEABLE		34950-2011	34950-2021	34951-1631	34951-1641
						-	-	-	-	15	-	17	-	-	-						
MX150 ASSY BLD 2X10 BK A/14	334822175	A-BLACK	GCP	PLR	M-B	1	-	-	-	-	-	-	8	9	-	SALEABLE		34950-2011	34950-2021	34951-1631	34951-1641
						11	-	-	-	-	-	-	-	19	20						
MX150 ASSY BLD 2X10 BK A/17	334822176	A-BLACK	GCP	PLR	M-B	-	-	-	-	-	-	-	-	-	10	SALEABLE		34950-2011	34950-2021	34951-1631	34951-1641
						-	-	-	-	-	-	-	-	19	20						
MX150 ASSY BLD 2X10 BK A/16	334822177	A-BLACK	GCP	PLR	M-B	-	-	-	-	-	-	-	-	-	-	SALEABLE		34950-2011	34950-2021	34951-1631	34951-1641
						-	-	13	-	-	16	-	-	19	20						
MX150 ASSY BLD 2X10 BK A/18	334822178	A-BLACK	GCP	PLR	M-B	-	-	-	4	-	-	-	-	-	-	SALEABLE		34950-2011	34950-2021	34951-1631	34951-1641
						-	-	-	14	-	-	-	-	-	-						
MX150 ASSY BLD 2X10 BK A/6	334822179	A-BLACK	GCP	PLR	M-B	-	-	-	4	5	6	7	8	9	10	SALEABLE		34950-2011	34950-2021	34951-1631	34951-1641
						-	-	-	14	15	16	17	18	19	20						
MX150 ASSY BLD 2X10 BK A/11	334822180	A-BLACK	GCP	PLR	M-B	1	-	-	-	-	-	-	8	-	10	SALEABLE		34950-2011	34950-2021	34951-1631	34951-1641
						11	12	13	14	15	-	17	-	-	-						
MX150 ASSY BLD 2X10 BK A/9	334822181	A-BLACK	GCP	PLR	M-B	1	-	3	4	-	-	-	8	9	-	SALEABLE		34950-2011	34950-2021	34951-1631	34951-1641
						11	-	13	14	-	-	-	18	19	20						
MX150 ASSY BLD 2X10 BK A/8	334822182	A-BLACK	GCP	PLR	M-B	1	-	3	4	-	-	-	8	9	10	SALEABLE		34950-2011	34950-2021	34951-1631	34951-1641
						11	-	13	14	-	-	-	18	19	20						
MX150 ASSY BLD 2X10 BK A/13	334822183	A-BLACK	GCP	PLR	M-B	1	-	-	-	-	-	-	8	9	10	SALEABLE		34950-2011	34950-2021	34951-1631	34951-1641
						11	-	-	-	-	-	-	-	19	20						
MX150 ASSY BLD 2X10 BK A/17	334822184	A-BLACK	GCP	PLR	M-B	1	-	-	-	-	-	-	-	9	-	SALEABLE		34950-2011	34950-2021	34951-1631	34951-1641
						-	12	-	-	-	-	-	-	-	-						
MX150 ASSY BLD 2X10 BK A/18	334822185	A-BLACK	GCP	PLR	M-B	1	-	-	-	-	-	-	-	-	-	SALEABLE		34950-2011	34950-2021	34951-1631	34951-1641
						-	-	-	-	-	-	-	-	19	-						
MX150 ASSY BLD 2X10 BK A/14	334822186	A-BLACK	GCP	PLR	M-B	-	2	3	-	5	-	-	-	-	-	SALEABLE		34950-2011	34950-2021	34951-1631	34951-1641
						-	-	-	14	-	-	-	-	19	20						
MX150 ASSY BLD 2X10 BK A/16	334822187	A-BLACK	GCP	PLR	M-B	1	-	-	-	-	-	-	-	-	-	SALEABLE		34950-2011	34950-2021	34951-1631	34951-1641
						-	12	13	-	-	-	-	-	19	-						
MX150 ASSY BLD 2X10 BK A/11	334822188	A-BLACK	GCP	PLR	M-B	1	-	-	-	5	6	7	8	-	-	SALEABLE		34950-2011	34950-2021	34951-1631	34951-1641
						-	12	13	-	15	-	-	-	19	-						
MX150 ASSY BLD 2X10 BK A/5	334822189	A-BLACK	GCP	PLR	M-B	1	2	3	4	5	6	7	8	9	-	SALEABLE		34950-2011	34950-2021	34951-1631	34951-1641
						-	12	13	14	15	16	-	-	19	-						
MX150 ASSY BLD 2X10 BK A/2	334822190	A-BLACK	GCP	PLR	M-B	1	2	3	4	5	6	7	8	9	10	SALEABLE		34950-2011	34950-2021	34951-1631	34951-1641
						11	12	13	14	15	16	-	-	19	20						
MX150 ASSY BLD 2X10 BK A/8	334822191	A-BLACK	GCP	PLR	M-B	1	2	3	4	5	6	-	8	-	10	SALEABLE		34950-2011	34950-2021	34951-1631	34951-1641
						-	-	13	-	-	16	-	-	19	20						

Downloaded from Arrow.com.

molex

MX150 2X10 BLADE SEALED ASSEMBLY MAT SEAL
BOM AND PIN OUT SHEET

ASSEMBLY DESCRIPTION	ASSEMBLY PART NUMBER	COMPONENT				BLOCKED TERMINALS										STATUS	COMMENT	OPTIONAL ATTACHMENTS SOLD SEPARATELY			
		THE PRESENCE OF AN ABBREVIATION INDICATES THE PRESENCE OF THAT COMPONENT				CAVITY WITH A NUMBER INDICATES BLOCKED TERMINAL POSITION CAVITY WITHOUT A NUMBER INDICATES OPEN TERMINAL POSITION															
		HOUSING KEY/COLOR	GROMMET CAP	PLR	MAT SEAL													BACKSHELL WITH RIBS	BACKSHELL WITHOUT RIBS	90^0 ADAPTOR WITH RIBS	90^0 ADAPTOR WITHOUT RIBS
MX150 ASSY BLD 2X10 BK A/14	334822192	A-BLACK	GCP	PLR	M-B	-	2	-	-	-	-	-	8	-	-	SALEABLE		34950-2011	34950-2021	34951-1631	34951-1641
						-	-	13	-	-	16	-	-	19	20						
MX150 ASSY BLD 2X10 BK A/6	334822193	A-BLACK	GCP	PLR	M-B	1	2	3	4	5	6	7	8	9	10	SALEABLE		34950-2011	34950-2021	34951-1631	34951-1641
						-	-	13	-	-	16	-	-	19	20						
MX150 ASSY BLD 2X10 BK A/7	334822194	A-BLACK	GCP	PLR	M-B	1	2	3	4	5	6	-	8	9	10	SALEABLE		34950-2011	34950-2021	34951-1631	34951-1641
						-	-	13	-	-	16	-	-	19	20						
MX150 ASSY BLD 2X10 BK A/15	334822195	A-BLACK	GCP	PLR	M-B	-	2	-	-	-	-	-	-	-	-	SALEABLE		34950-2011	34950-2021	34951-1631	34951-1641
						-	-	13	-	-	16	-	-	19	20						
MX150 ASSY BLD 2X10 LG B/9	334822196	B-LIGHT GRAY	GCP	PLR	M-B	1	2	3	4	5	6	7	8	-	-	SALEABLE		34950-2011	34950-2021	34951-1631	34951-1641
						11	-	-	-	-	-	17	-	19	-						
MX150 ASSY BLD 2X10 LG B/17	334822197	B-LIGHT GRAY	GCP	PLR	M-B	-	-	-	-	-	-	-	-	-	-	SALEABLE		34950-2011	34950-2021	34951-1631	34951-1641
						11	-	-	-	-	-	17	-	19	-						
MX150 ASSY BLD 2X10 BK A/12	334822198	A-BLACK	GCP	PLR	M-B	1	2	3	-	-	-	7	-	9	-	SALEABLE		34950-2011	34950-2021	34951-1631	34951-1641
						-	-	-	-	-	16	-	-	19	20						
MX150 ASSY BLD 2X10 BK A/6	334822199	A-BLACK	GCP	PLR	M-B	1	2	3	4	5	-	7	8	9	-	SALEABLE		34950-2011	34950-2021	34951-1631	34951-1641
						-	-	13	14	15	16	-	-	19	20						
MX150 ASSY BLD 2X10 BK A/8	334822200	A-BLACK	GCP	PLR	M-B	1	2	3	4	5	-	-	-	-	-	SALEABLE		34950-2011	34950-2021	34951-1631	34951-1641
						11	12	-	14	-	-	17	18	19	20						
MX150 ASSY BLD 2X10 BK A/12	334822201	A-BLACK	GCP	PLR	M-B	1	2	-	-	-	-	-	-	9	10	SALEABLE		34950-2011	34950-2021	34951-1631	34951-1641
						11	-	-	-	15	-	-	-	19	20						
MX150 ASSY BLD 2X10 BK A/12	334822202	A-BLACK	GCP	PLR	M-B	-	2	3	4	5	-	-	8	9	-	SALEABLE		34950-2011	34950-2021	34951-1631	34951-1641
						-	-	-	-	-	16	-	-	-	20						
MX150 ASSY BLD 2X10 BK A/14	334822203	A-BLACK	GCP	PLR	M-B	1	2	3	-	-	-	-	-	9	-	SALEABLE		34950-2011	34950-2021	34951-1631	34951-1641
						-	-	-	-	-	-	-	-	19	20						
MX150 ASSY BLD 2X10 BK A/11	334822204	A-BLACK	GCP	PLR	M-B	-	-	-	4	5	6	-	-	-	-	SALEABLE		34950-2011	34950-2021	34951-1631	34951-1641
						-	12	-	-	15	16	17	18	19	-						
MX150 ASSY BLD 2X10 LG B/12	334822205	B-LIGHT GRAY	GCP	PLR	M-B	-	-	3	4	5	-	-	8	9	10	SALEABLE		34950-2011	34950-2021	34951-1631	34951-1641
						-	-	-	14	-	-	-	-	19	-						
MX150 ASSY BLD 2X10 BK A/10	334822206	A-BLACK	GCP	PLR	M-B	1	2	3	4	5	6	-	-	-	-	SALEABLE		34950-2011	34950-2021	34951-1631	34951-1641
						-	-	-	-	-	-	17	18	19	20						
MX150 ASSY BLD 2X10 LG B/15	334822207	B-LIGHT GRAY	GCP	PLR	M-B	-	-	-	4	5	6	-	-	9	10	SALEABLE		34950-2011	34950-2021	34951-1631	34951-1641
						-	-	-	-	-	-	-	-	-	-						
MX150 ASSY BLD 2X10 LG B/17	334822208	B-LIGHT GRAY	GCP	PLR	M-B	-	-	-	-	-	-	-	-	9	10	SALEABLE		34950-2011	34950-2021	34951-1631	34951-1641
						11	-	-	-	-	-	-	-	-	-						
MX150 ASSY BLD 2X10 LG B/13	334822209	B-LIGHT GRAY	GCP	PLR	M-B	-	-	-	4	5	6	7	-	-	10	SALEABLE		34950-2011	34950-2021	34951-1631	34951-1641
						-	-	-	-	-	-	17	18	-	-						
MX150 ASSY BLD 2X10 BK A/13	334822210	A-BLACK	GCP	PLR	M-B	1	-	-	-	-	-	-	-	9	10	SALEABLE		34950-2011	34950-2021	34951-1631	34951-1641
						11	12	-	-	-	16	-	-	-	20						
MX150 ASSY BLD 2X10 BK A/12	334822211	A-BLACK	GCP	PLR	M-B	1	2	-	-	-	-	7	-	-	10	SALEABLE		34950-2011	34950-2021	34951-1631	34951-1641
						11	12	-	-	-	-	-	18	-	20						
MX150 ASSY BLD 2X10 BK A/17	334822213	A-BLACK	GCP	PLR	M-B	-	-	-	-	-	-	-	-	-	-	SALEABLE		34950-2011	34950-2021	34951-1631	34951-1641
						-	-	13	-	-	-	-	-	19	20						
MX150 ASSY BLD 2X10 BK A/19	334822214	A-BLACK	GCP	PLR	M-B	-	-	-	-	-	-	-	-	-	-	SALEABLE		34950-2011	34950-2021	34951-1631	34951-1641
						-	-	-	-	-	16	-	-	-	-						
MX150 ASSY BLD 2X10 BK A/15	334822215	A-BLACK	GCP	PLR	M-B	-	2	-	-	-	-	-	8	-	10	SALEABLE		34950-2011	34950-2021	34951-1631	34951-1641
						-	-	-	-	-	-	17	-	19	-						
MX150 ASSY BLD 2X10 BK A/18	334822216	A-BLACK	GCP	PLR	M-B	-	-	-	-	-	-	-	-	-	-	SALEABLE		34950-2011	34950-2021	34951-1631	34951-1641
						-	-	-	-	-	16	-	-	-	20						
MX150 ASSY BLD 2X10 BK A/16	334822217	A-BLACK	GCP	PLR	M-B	-	-	-	-	-	-	7	-	-	-	SALEABLE		34950-2011	34950-2021	34951-1631	34951-1641
						-	12	-	-	-	-	17	-	-	20						
MX150 ASSY BLD 2X10 BK A/12	334822218	A-BLACK	GCP	PLR	M-B	1	2	3	4	5	6	-	-	-	-	SALEABLE		34950-2011	34950-2021	34951-1631	34951-1641
						-	-	-	-	-	-	-	-	19	20						
MX150 ASSY BLD 2X10 BK A/18	334822219	A-BLACK	GCP	PLR	M-B	-	-	-	-	-	6	-	-	-	-	SALEABLE		34950-2011	34950-2021	34951-1631	34951-1641
						-	-	-	-	-	-	-	-	-	20						

Downloaded from Arrow.com.

molex

MX150 2X10 BLADE SEALED ASSEMBLY MAT SEAL
BOM AND PIN OUT SHEET

ASSEMBLY DESCRIPTION	ASSEMBLY PART NUMBER	COMPONENT				BLOCKED TERMINALS										STATUS	COMMENT	OPTIONAL ATTACHMENTS SOLD SEPARATELY			
		THE PRESENCE OF AN ABBREVIATION INDICATES THE PRESENCE OF THAT COMPONENT				CAVITY WITH A NUMBER INDICATES BLOCKED TERMINAL POSITION CAVITY WITHOUT A NUMBER INDICATES OPEN TERMINAL POSITION															
		HOUSING KEY/COLOR	GROMMET CAP	PLR	MAT SEAL													BACKSHELL WITH RIBS	BACKSHELL WITHOUT RIBS	90^0 ADAPTOR WITH RIBS	90^0 ADAPTOR WITHOUT RIBS
MX150 ASSY BLD 2X10 BK A/10	334822220	A-BLACK	GCP	PLR	M-B	1	-	3	-	5	-	7	-	9	-	SALEABLE		34950-2011	34950-2021	34951-1631	34951-1641
		-	12	-	14	-	16	-	18	-	20										
MX150 ASSY BLD 2X10 BK A/10	334822221	A-BLACK	GCP	PLR	M-B	-	2	-	4	-	6	-	8	-	10	SALEABLE		34950-2011	34950-2021	34951-1631	34951-1641
		11	-	13	-	15	-	17	-	19	-										
MX150 ASSY BLD 2X10 BK A/14	334822222	A-BLACK	GCP	PLR	M-B	1	2	3	-	-	-	-	-	9	-	SALEABLE		34950-2011	34950-2021	34951-1631	34951-1641
		-	-	-	-	-	16	-	-	-	20										
MX150 ASSY BLD 2X10 BK A/17	334822223	A-BLACK	GCP	PLR	M-B	-	-	-	-	-	-	7	-	-	-	SALEABLE		34950-2011	34950-2021	34951-1631	34951-1641
		-	12	-	-	-	16	-	-	-	-										
MX150 ASSY BLD 2X10 BK A/15	334822224	A-BLACK	GCP	PLR	M-B	-	-	-	-	-	-	-	-	-	10	SALEABLE		34950-2011	34950-2021	34951-1631	34951-1641
		-	-	-	14	15	-	17	-	19	-										
MX150 ASSY BLD 2X10 BK A/8	334822225	A-BLACK	GCP	PLR	M-B	1	2	3	4	5	6	-	8	-	10	SALEABLE		34950-2011	34950-2021	34951-1631	34951-1641
		-	-	-	-	-	-	17	18	19	20										
MX150 ASSY BLD 2X10 LG B/16	334822226	B-LIGHT GRAY	GCP	PLR	M-B	-	-	-	-	-	-	-	-	-	-	SALEABLE		34950-2011	34950-2021	34951-1631	34951-1641
		-	-	-	-	15	16	17	-	-	20										
MX150 ASSY BLD 2X10 BK A/12	334822227	A-BLACK	GCP	PLR	M-B	-	-	3	-	-	-	-	-	-	10	SALEABLE		34950-2011	34950-2021	34951-1631	34951-1641
		-	-	13	14	-	-	17	18	19	20										
MX150 ASSY BLD 2X10 BK A/6	334822228	A-BLACK	GCP	PLR	M-B	-	-	3	4	5	6	7	8	9	10	SALEABLE		34950-2011	34950-2021	34951-1631	34951-1641
		-	-	13	14	-	-	17	18	19	20										
MX150 ASSY BLD 2X10 BK A/7	334822229	A-BLACK	GCP	PLR	M-B	-	-	3	4	5	6	7	8	9	10	SALEABLE		34950-2011	34950-2021	34951-1631	34951-1641
		-	-	13	14	-	-	17	18	19	-										
MX150 ASSY BLD 2X10 BK A/13	334822230	A-BLACK	GCP	PLR	M-B	-	-	3	-	-	-	-	-	-	10	SALEABLE		34950-2011	34950-2021	34951-1631	34951-1641
		-	-	13	14	-	-	17	18	19	-										
MX150 ASSY BLD 2X10 BK A/10	334822231	A-BLACK	GCP	PLR	M-B	1	2	3	4	5	6	-	8	-	10	SALEABLE		34950-2011	34950-2021	34951-1631	34951-1641
		-	-	-	-	-	-	-	18	-	20										
MX150 ASSY BLD 2X10 BK A/18	334822232	A-BLACK	GCP	PLR	M-B	-	-	-	-	-	-	-	-	-	-	SALEABLE		34950-2011	34950-2021	34951-1631	34951-1641
		-	-	-	-	-	-	-	18	-	20										
MX150 ASSY BLD 2X10 LG B/7	334822233	B-LIGHT GRAY	GCP	PLR	M-B	1	2	3	4	5	6	7	8	-	-	SALEABLE		34950-2011	34950-2021	34951-1631	34951-1641
		11	12	13	-	-	-	17	-	19	-										
MX150 ASSY BLD 2X10 LG B/15	334822234	B-LIGHT GRAY	GCP	PLR	M-B	-	-	-	-	-	-	-	-	-	-	SALEABLE		34950-2011	34950-2021	34951-1631	34951-1641
		11	12	13	-	-	-	17	-	19	-										
MX150 ASSY BLD 2X10 LG B/15	334822235	B-LIGHT GRAY	GCP	PLR	M-B	-	2	3	-	-	-	-	-	-	-	SALEABLE		34950-2011	34950-2021	34951-1631	34951-1641
		-	12	13	-	-	-	-	-	19	-										
MX150 ASSY BLD 2X10 BK A/8	334822236	A-BLACK	GCP	PLR	M-B	-	-	3	4	-	6	7	8	9	-	SALEABLE		34950-2011	34950-2021	34951-1631	34951-1641
		-	12	13	14	15	16	17	-	-	-										
MX150 ASSY BLD 2X10 BK A/13	334822237	A-BLACK	GCP	PLR	M-B	-	-	3	4	5	6	7	-	-	-	SALEABLE		34950-2011	34950-2021	34951-1631	34951-1641
		-	-	-	-	-	-	-	18	19	-										
MX150 ASSY BLD 2X10 BK A/17	334822238	A-BLACK	GCP	PLR	M-B	-	-	-	-	5	-	-	-	-	-	SALEABLE		34950-2011	34950-2021	34951-1631	34951-1641
		-	-	-	-	-	-	-	18	19	-										
MX150 ASSY BLD 2X10 BK A/11	334822239	A-BLACK	GCP	PLR	M-B	-	-	3	4	5	6	7	-	-	10	SALEABLE		34950-2011	34950-2021	34951-1631	34951-1641
		-	-	-	-	-	-	-	18	19	20										
MX150 ASSY BLD 2X10 BK A/15	334822240	A-BLACK	GCP	PLR	M-B	-	-	-	-	5	-	-	-	-	10	SALEABLE		34950-2011	34950-2021	34951-1631	34951-1641
		-	-	-	-	-	-	-	18	19	20										
MX150 ASSY BLD 2X10 BK A/6	334822241	A-BLACK	GCP	PLR	M-B	-	-	3	4	-	6	7	8	9	10	SALEABLE		34950-2011	34950-2021	34951-1631	34951-1641
		-	12	13	14	15	16	17	-	-	20										
MX150 ASSY BLD 2X10 BK A/12	334822242	A-BLACK	GCP	PLR	M-B	1	2	3	4	5	6	-	8	-	10	SALEABLE		34950-2011	34950-2021	34951-1631	34951-1641
		-	-	-	-	-	-	-	-	-	-										
MX150 ASSY BLD 2X10 BK A/6	334822243	A-BLACK	GCP	PLR	M-B	1	2	3	-	-	-	-	8	9	-	SALEABLE		34950-2011	34950-2021	34951-1631	34951-1641
		-	12	13	14	15	16	17	18	19	20										
MX150 ASSY BLD 2X10 BK A/4	334822244	A-BLACK	GCP	PLR	M-B	1	2	3	-	-	-	7	8	9	10	SALEABLE		34950-2011	34950-2021	34951-1631	34951-1641
		-	12	13	14	15	16	17	18	19	20										
MX150 ASSY BLD 2X10 BK A/6	334822245	A-BLACK	GCP	PLR	M-B	-	2	3	-	-	-	7	8	9	10	SALEABLE		34950-2011	34950-2021	34951-1631	34951-1641
		-	12	13	14	15	16	17	18	-	20										
MX150 ASSY BLD 2X10 BK A/4	334822246	A-BLACK	GCP	PLR	M-B	1	2	3	4	5	-	-	8	9	-	SALEABLE		34950-2011	34950-2021	34951-1631	34951-1641
		-	12	13	14	15	16	17	18	19	20										

Downloaded from Arrow.com.

molex

MX150 2X10 BLADE SEALED ASSEMBLY MAT SEAL
BOM AND PIN OUT SHEET

ASSEMBLY DESCRIPTION	ASSEMBLY PART NUMBER	COMPONENT				BLOCKED TERMINALS										STATUS	COMMENT	OPTIONAL ATTACHMENTS SOLD SEPARATELY			
		THE PRESENCE OF AN ABBREVIATION INDICATES THE PRESENCE OF THAT COMPONENT				CAVITY WITH A NUMBER INDICATES BLOCKED TERMINAL POSITION CAVITY WITHOUT A NUMBER INDICATES OPEN TERMINAL POSITION												BACKSHELL WITH RIBS	BACKSHELL WITHOUT RIBS	90^0 ADAPTOR WITH RIBS	90^0 ADAPTOR WITHOUT RIBS
		HOUSING KEY/COLOR	GROMMET CAP	PLR	MAT SEAL																
MX150 ASSY BLD 2X10 BK A/2	334822247	A-BLACK	GCP	PLR	M-B	1	2	3	4	5	-	7	8	9	10	SALEABLE		34950-2011	34950-2021	34951-1631	34951-1641
						-	12	13	14	15	16	17	18	19	20						
MX150 ASSY BLD 2X10 BK A/10	334822248	A-BLACK	GCP	PLR	M-B	-	2	-	-	-	-	-	8	-	-	SALEABLE		34950-2011	34950-2021	34951-1631	34951-1641
						-	12	13	14	15	-	17	18	19	20						
MX150 ASSY BLD 2X10 BK A/14	334822249	A-BLACK	GCP	PLR	M-B	-	2	-	-	-	-	-	8	-	-	SALEABLE		34950-2011	34950-2021	34951-1631	34951-1641
						-	-	-	-	-	-	17	18	19	20						
MX150 ASSY BLD 2X10 BK A/12	334822250	A-BLACK	GCP	PLR	M-B	-	-	-	-	-	-	-	-	-	-	SALEABLE		34950-2011	34950-2021	34951-1631	34951-1641
						-	12	13	14	15	-	17	18	19	20						
MX150 ASSY BLD 2X10 BK A/8	334822251	A-BLACK	GCP	PLR	M-B	1	2	3	4	5	6	7	8	-	-	SALEABLE		34950-2011	34950-2021	34951-1631	34951-1641
						-	-	-	-	-	-	17	18	19	20						
MX150 ASSY BLD 2X10 BK A/4	334822252	A-BLACK	GCP	PLR	M-B	1	2	3	4	5	6	7	8	-	-	SALEABLE		34950-2011	34950-2021	34951-1631	34951-1641
						-	12	13	14	15	-	17	18	19	20						
MX150 ASSY BLD 2X10 BK A/11	334822253	A-BLACK	GCP	PLR	M-B	1	2	3	-	-	-	-	-	9	10	SALEABLE		34950-2011	34950-2021	34951-1631	34951-1641
						11	12	-	-	-	16	-	-	-	20						
MX150 ASSY BLD 2X10 BK A/13	334822254	A-BLACK	GCP	PLR	M-B	1	-	-	-	-	-	-	-	9	10	SALEABLE		34950-2011	34950-2021	34951-1631	34951-1641
						11	-	-	-	-	16	-	-	19	20						
MX150 ASSY BLD 2X10 BK A/7	334822255	A-BLACK	GCP	PLR	M-B	1	2	3	4	5	-	7	8	9	-	SALEABLE		34950-2011	34950-2021	34951-1631	34951-1641
						-	-	-	-	-	16	17	18	19	20						
MX150 ASSY BLD 2X10 BK A/9	334822256	A-BLACK	GCP	PLR	M-B	1	2	3	-	-	-	7	-	9	-	SALEABLE		34950-2011	34950-2021	34951-1631	34951-1641
						-	-	13	14	15	16	-	-	19	20						
MX150 ASSY BLD 2X10 BK A/9	334822257	A-BLACK	GCP	PLR	M-B	1	2	3	4	5	-	7	8	9	-	SALEABLE		34950-2011	34950-2021	34951-1631	34951-1641
						-	-	-	-	-	16	-	-	19	20						
MX150 ASSY BLD 2X10 BK A/9	334822258	A-BLACK	GCP	PLR	M-B	1	2	3	-	-	-	7	-	9	10	SALEABLE		34950-2011	34950-2021	34951-1631	34951-1641
						11	12	-	-	-	16	-	-	19	20						
MX150 ASSY BLD 2X10 BK A/10	334822259	A-BLACK	GCP	PLR	M-B	1	2	3	4	5	6	-	8	9	-	SALEABLE		34950-2011	34950-2021	34951-1631	34951-1641
						-	-	-	-	-	16	-	-	-	20						
MX150 ASSY BLD 2X10 BK A/7	334822260	A-BLACK	GCP	PLR	M-B	1	2	3	-	-	6	-	-	9	10	SALEABLE		34950-2011	34950-2021	34951-1631	34951-1641
						11	12	13	14	15	16	-	-	-	20						
MX150 ASSY BLD 2X10 BK A/14	334822261	A-BLACK	GCP	PLR	M-B	-	2	-	-	-	-	-	8	-	10	SALEABLE		34950-2011	34950-2021	34951-1631	34951-1641
						11	-	-	-	15	16	-	-	-	-						
MX150 ASSY BLD 2X10 BK A/18	334822262	A-BLACK	GCP	PLR	M-B	-	2	-	-	-	-	-	8	-	-	SALEABLE		34950-2011	34950-2021	34951-1631	34951-1641
						-	-	-	-	-	-	-	-	-	-						
MX150 ASSY BLD 2X10 BK A/7	334822263	A-BLACK	GCP	PLR	M-B	1	2	3	4	5	6	7	8	-	10	SALEABLE		34950-2011	34950-2021	34951-1631	34951-1641
						-	-	-	14	15	-	17	-	19	-						
MX150 ASSY BLD 2X10 BK A/19	334822264	A-BLACK	GCP	PLR	M-B	-	-	-	-	5	-	-	-	-	-	SALEABLE		34950-2011	34950-2021	34951-1631	34951-1641
						-	-	-	-	-	-	-	-	-	-						
MX150 ASSY BLD 2X10 BK A/18	334822265	A-BLACK	GCP	PLR	M-B	-	-	-	-	-	-	-	-	-	-	SALEABLE		34950-2011	34950-2021	34951-1631	34951-1641
						-	-	-	-	-	-	17	18	-	-						
MX150 ASSY BLD 2X10 BK A/14	334822266	A-BLACK	GCP	PLR	M-B	-	-	3	-	-	-	-	-	-	-	SALEABLE		34950-2011	34950-2021	34951-1631	34951-1641
						-	-	-	-	-	16	17	18	19	20						
MX150 ASSY BLD 2X10 BK A/9	334822267	A-BLACK	GCP	PLR	M-B	1	-	3	-	-	-	7	-	-	10	SALEABLE		34950-2011	34950-2021	34951-1631	34951-1641
						-	12	13	14	15	-	17	18	19	-						
MX150 ASSY BLD 2X10 BK A/13	334822268	A-BLACK	GCP	PLR	M-B	1	-	-	-	-	-	7	-	-	10	SALEABLE		34950-2011	34950-2021	34951-1631	34951-1641
						-	12	13	-	-	-	17	18	-	-						
MX150 ASSY BLD 2X10 BK A/10	334822269	A-BLACK	GCP	PLR	M-B	1	2	-	-	-	-	-	8	9	10	SALEABLE		34950-2011	34950-2021	34951-1631	34951-1641
						-	12	13	-	-	16	17	18	-	-						
MX150 ASSY BLD 2X10 BK A/8	334822270	A-BLACK	GCP	PLR	M-B	1	2	-	4	5	-	-	8	9	10	SALEABLE		34950-2011	34950-2021	34951-1631	34951-1641
						-	12	13	-	-	16	17	18	-	-						
MX150 ASSY BLD 2X10 BK A/6	334822271	A-BLACK	GCP	PLR	M-B	1	2	3	-	-	-	-	8	9	10	SALEABLE		34950-2011	34950-2021	34951-1631	34951-1641
						-	12	13	14	15	16	17	18	19	-						
MX150 ASSY BLD 2X10 BK A/4	334822272	A-BLACK	GCP	PLR	M-B	1	2	3	4	5	-	-	8	9	10	SALEABLE		34950-2011	34950-2021	34951-1631	34951-1641
						-	12	13	14	15	16	17	18	19	-						
MX150 ASSY BLD 2X10 BK A/8	334822273	A-BLACK	GCP	PLR	M-B	1	2	-	-	-	-	7	8	9	10	SALEABLE		34950-2011	34950-2021	34951-1631	34951-1641
						-	12	13	-	-	16	17	18	-	20						

Downloaded from Arrow.com.

molex

MX150 2X10 BLADE SEALED ASSEMBLY MAT SEAL
BOM AND PIN OUT SHEET

ASSEMBLY DESCRIPTION	ASSEMBLY PART NUMBER	COMPONENT				BLOCKED TERMINALS										STATUS	COMMENT	OPTIONAL ATTACHMENTS SOLD SEPARATELY			
		THE PRESENCE OF AN ABBREVIATION INDICATES THE PRESENCE OF THAT COMPONENT				CAVITY WITH A NUMBER INDICATES BLOCKED TERMINAL POSITION CAVITY WITHOUT A NUMBER INDICATES OPEN TERMINAL POSITION												BACKSHELL WITH RIBS	BACKSHELL WITHOUT RIBS	90^0 ADAPTOR WITH RIBS	90^0 ADAPTOR WITHOUT RIBS
		HOUSING KEY/COLOR	GROMMET CAP	PLR	MAT SEAL																
MX150 ASSY BLD 2X10 BK A/6	334822274	A-BLACK	GCP	PLR	M-B	1	2	3	-	-	-	7	8	9	10	SALEABLE		34950-2011	34950-2021	34951-1631	34951-1641
						-	12	13	14	15	-	17	18	19	-						
MX150 ASSY BLD 2X10 BK A/8	334822275	A-BLACK	GCP	PLR	M-B	-	2	3	-	-	-	7	8	9	10	SALEABLE		34950-2011	34950-2021	34951-1631	34951-1641
						-	12	13	14	15	-	17	18	-	-						
MX150 ASSY BLD 2X10 BK A/11	334822276	A-BLACK	GCP	PLR	M-B	-	2	-	-	-	-	7	8	9	10	SALEABLE		34950-2011	34950-2021	34951-1631	34951-1641
						-	12	13	-	-	-	17	18	-	-						
MX150 ASSY BLD 2X10 BK A/6	334822277	A-BLACK	GCP	PLR	M-B	1	2	-	4	5	-	7	8	9	10	SALEABLE		34950-2011	34950-2021	34951-1631	34951-1641
						-	12	13	-	-	16	17	18	-	20						
MX150 ASSY BLD 2X10 BK A/15	334822278	A-BLACK	GCP	PLR	M-B	-	-	-	-	-	-	-	-	-	10	SALEABLE		34950-2011	34950-2021	34951-1631	34951-1641
						11	12	-	-	-	16	-	-	-	20						
MX150 ASSY BLD 2X10 BK A/13	334822279	A-BLACK	GCP	PLR	M-B	-	-	3	4	-	-	-	-	-	10	SALEABLE		34950-2011	34950-2021	34951-1631	34951-1641
						11	12	-	-	-	16	-	-	-	20						
MX150 ASSY BLD 2X10 BK A/9	334822280	A-BLACK	GCP	PLR	M-B	-	-	3	4	-	-	-	-	-	10	SALEABLE		34950-2011	34950-2021	34951-1631	34951-1641
						11	12	-	-	15	16	17	18	19	20						
MX150 ASSY BLD 2X10 BK A/11	334822281	A-BLACK	GCP	PLR	M-B	-	-	-	-	-	-	-	-	-	10	SALEABLE		34950-2011	34950-2021	34951-1631	34951-1641
						11	12	-	-	15	16	17	18	19	20						
MX150 ASSY BLD 2X10 BK A/14	334822282	A-BLACK	GCP	PLR	M-B	-	2	3	-	-	6	-	-	-	10	SALEABLE		34950-2011	34950-2021	34951-1631	34951-1641
						-	12	-	14	-	-	-	-	-	-						
MX150 ASSY BLD 2X10 BK A/17	334822283	A-BLACK	GCP	PLR	M-B	-	-	-	4	-	-	-	-	-	-	SALEABLE		34950-2011	34950-2021	34951-1631	34951-1641
						-	-	-	14	-	-	-	-	19	-						
MX150 ASSY BLD 2X10 BK A/14	334822284	A-BLACK	GCP	PLR	M-B	-	-	3	4	-	-	-	-	-	-	SALEABLE		34950-2011	34950-2021	34951-1631	34951-1641
						-	12	-	14	-	-	-	-	19	20						
MX150 ASSY BLD 2X10 BK A/9	334822285	A-BLACK	GCP	PLR	M-B	1	2	3	-	-	6	7	-	-	10	SALEABLE		34950-2011	34950-2021	34951-1631	34951-1641
						11	12	-	14	-	16	-	-	19	-						
MX150 ASSY BLD 2X10 BK A/2	334822286	A-BLACK	GCP	PLR	M-B	1	2	3	-	-	6	7	8	9	10	SALEABLE		34950-2011	34950-2021	34951-1631	34951-1641
						11	12	13	14	15	16	17	18	19	20						
MX150 ASSY BLD 2X10 BK A/11	334822287	A-BLACK	GCP	PLR	M-B	1	2	3	4	5	6	-	8	-	10	SALEABLE		34950-2011	34950-2021	34951-1631	34951-1641
						-	-	-	-	-	-	17	-	-	-						
MX150 ASSY BLD 2X10 BK A/6	334822288	A-BLACK	GCP	PLR	M-B	1	2	3	-	-	-	-	-	9	10	SALEABLE		34950-2011	34950-2021	34951-1631	34951-1641
						11	12	13	-	15	16	17	18	19	20						
MX150 ASSY BLD 2X10 BK A/11	334822289	A-BLACK	GCP	PLR	M-B	-	-	3	-	-	-	-	-	9	10	SALEABLE		34950-2011	34950-2021	34951-1631	34951-1641
						11	12	13	-	15	-	-	-	19	20						
MX150 ASSY BLD 2X10 BK A/7	334822290	A-BLACK	GCP	PLR	M-B	1	2	3	4	5	6	7	8	-	-	SALEABLE		34950-2011	34950-2021	34951-1631	34951-1641
						-	-	-	-	-	16	17	18	19	20						
MX150 ASSY BLD 2X10 BK A/9	334822291	A-BLACK	GCP	PLR	M-B	1	2	3	4	5	6	7	8	-	-	SALEABLE		34950-2011	34950-2021	34951-1631	34951-1641
						-	-	-	-	-	-	-	18	19	20						
MX150 ASSY BLD 2X10 BK A/19	334822292	A-BLACK	GCP	PLR	M-B	-	-	-	-	-	-	-	-	-	-	SALEABLE		34950-2011	34950-2021	34951-1631	34951-1641
						-	-	-	-	-	-	-	18	-	-						
MX150 ASSY BLD 2X10 BK A/6	334822293	A-BLACK	GCP	PLR	M-B	1	2	3	4	-	-	7	8	9	-	SALEABLE		34950-2011	34950-2021	34951-1631	34951-1641
						-	12	13	14	-	-	17	18	19	20						
MX150 ASSY BLD 2X10 BK A/8	334822294	A-BLACK	GCP	PLR	M-B	1	2	3	-	-	-	7	8	9	-	SALEABLE		34950-2011	34950-2021	34951-1631	34951-1641
						-	12	13	-	-	-	17	18	19	20						
MX150 ASSY BLD 2X10 BK A/3	334822295	A-BLACK	GCP	PLR	M-B	-	2	3	4	5	6	7	8	9	10	SALEABLE		34950-2011	34950-2021	34951-1631	34951-1641
						11	12	-	14	15	16	17	18	19	-						
MX150 ASSY BLD 2X10 BK A/9	334822296	A-BLACK	GCP	PLR	M-B	-	2	3	4	-	-	7	8	9	-	SALEABLE		34950-2011	34950-2021	34951-1631	34951-1641
						-	12	-	14	-	-	17	18	19	-						
MX150 ASSY BLD 2X10 BK A/11	334822297	A-BLACK	GCP	PLR	M-B	-	2	3	-	-	-	7	8	9	-	SALEABLE		34950-2011	34950-2021	34951-1631	34951-1641
						-	12	-	-	-	-	17	18	19	-						
MX150 ASSY BLD 2X10 BK A/12	334822298	A-BLACK	GCP	PLR	M-B	1	-	3	4	-	-	-	-	9	-	SALEABLE		34950-2011	34950-2021	34951-1631	34951-1641
						-	12	13	14	-	-	-	-	-	20						
MX150 ASSY BLD 2X10 BK A/14	334822299	A-BLACK	GCP	PLR	M-B	1	-	3	-	-	-	-	-	9	-	SALEABLE		34950-2011	34950-2021	34951-1631	34951-1641
						-	12	13	-	-	-	-	-	-	20						
MX150 ASSY BLD 2X10 BK A/15	334822300	A-BLACK	GCP	PLR	M-B	-	-	3	4	-	-	-	-	9	-	SALEABLE		34950-2011	34950-2021	34951-1631	34951-1641
						-	12	-	14	-	-	-	-	-	-						

Downloaded from Arrow.com.

molex

MX150 2X10 BLADE SEALED ASSEMBLY MAT SEAL
BOM AND PIN OUT SHEET

ASSEMBLY DESCRIPTION	ASSEMBLY PART NUMBER	COMPONENT				BLOCKED TERMINALS										STATUS	COMMENT	OPTIONAL ATTACHMENTS SOLD SEPARATELY			
		THE PRESENCE OF AN ABBREVIATION INDICATES THE PRESENCE OF THAT COMPONENT				CAVITY WITH A NUMBER INDICATES BLOCKED TERMINAL POSITION CAVITY WITHOUT A NUMBER INDICATES OPEN TERMINAL POSITION															
		HOUSING KEY/COLOR	GROMMET CAP	PLR	MAT SEAL													BACKSHELL WITH RIBS	BACKSHELL WITHOUT RIBS	90^0 ADAPTOR WITH RIBS	90^0 ADAPTOR WITHOUT RIBS
MX150 ASSY BLD 2X10 BK A/17	334822301	A-BLACK	GCP	PLR	M-B	-	-	3	-	-	-	-	-	9	-	SALEABLE		34950-2011	34950-2021	34951-1631	34951-1641
		-	12	-	-	-	-	-	-	-	-										
MX150 ASSY BLD 2X10 BK A/17	334822302	A-BLACK	GCP	PLR	M-B	-	-	-	-	-	-	-	-	9	-	SALEABLE		34950-2011	34950-2021	34951-1631	34951-1641
		-	-	13	-	-	-	-	-	-	20										
MX150 ASSY BLD 2X10 BK A/11	334822303	A-BLACK	GCP	PLR	M-B	-	-	-	-	-	-	-	-	9	-	SALEABLE		34950-2011	34950-2021	34951-1631	34951-1641
		-	-	13	14	15	16	17	18	19	20										
MX150 ASSY BLD 2X10 BK A/15	334822304	A-BLACK	GCP	PLR	M-B	-	2	-	-	-	-	-	8	9	-	SALEABLE		34950-2011	34950-2021	34951-1631	34951-1641
		-	-	13	-	-	-	-	-	-	20										
MX150 ASSY BLD 2X10 BK A/9	334822305	A-BLACK	GCP	PLR	M-B	-	2	-	-	-	-	-	8	9	-	SALEABLE		34950-2011	34950-2021	34951-1631	34951-1641
		-	-	13	14	15	16	17	18	19	20										
MX150 ASSY BLD 2X10 BK A/9	334822306	A-BLACK	GCP	PLR	M-B	1	2	3	4	5	6	7	8	9	-	SALEABLE		34950-2011	34950-2021	34951-1631	34951-1641
		-	-	13	-	-	-	-	-	-	20										
MX150 ASSY BLD 2X10 BK A/3	334822307	A-BLACK	GCP	PLR	M-B	1	2	3	4	5	6	7	8	9	-	SALEABLE		34950-2011	34950-2021	34951-1631	34951-1641
		-	-	13	14	15	16	17	18	19	20										
MX150 ASSY BLD 2X10 BK A/3	334822308	A-BLACK	GCP	PLR	M-B	1	2	3	-	-	6	7	8	9	10	SALEABLE		34950-2011	34950-2021	34951-1631	34951-1641
		-	12	13	14	15	16	17	18	19	20										
MX150 ASSY BLD 2X10 BK A/13	334822309	A-BLACK	GCP	PLR	M-B	1	2	3	4	5	-	-	-	-	-	SALEABLE		34950-2011	34950-2021	34951-1631	34951-1641
		-	-	-	-	-	-	-	-	19	20										
MX150 ASSY BLD 2X10 BK A/13	334822310	A-BLACK	GCP	PLR	M-B	-	2	3	-	5	-	-	-	-	-	SALEABLE		34950-2011	34950-2021	34951-1631	34951-1641
		-	-	13	-	-	-	17	-	19	20										
MX150 ASSY BLD 2X10 BK A/3	334822311	A-BLACK	GCP	PLR	M-B	-	2	3	4	5	-	7	8	9	10	SALEABLE		34950-2011	34950-2021	34951-1631	34951-1641
		11	12	13	14	15	16	17	-	19	20										
MX150 ASSY BLD 2X10 BK A/13	334822312	A-BLACK	GCP	PLR	M-B	-	2	-	-	5	6	-	-	9	10	SALEABLE		34950-2011	34950-2021	34951-1631	34951-1641
		-	-	-	-	-	-	-	-	19	20										
MX150 ASSY BLD 2X10 BK A/13	334822313	A-BLACK	GCP	PLR	M-B	1	-	3	-	-	6	-	-	9	10	SALEABLE		34950-2011	34950-2021	34951-1631	34951-1641
		-	12	13	-	-	-	-	-	-	-										
MX150 ASSY BLD 2X10 BK A/14	334822314	A-BLACK	GCP	PLR	M-B	-	-	-	-	-	-	-	-	9	10	SALEABLE		34950-2011	34950-2021	34951-1631	34951-1641
		11	12	13	-	-	-	-	-	-	20										
MX150 ASSY BLD 2X10 BK A/8	334822315	A-BLACK	GCP	PLR	M-B	-	-	-	-	-	-	-	-	9	10	SALEABLE		34950-2011	34950-2021	34951-1631	34951-1641
		11	12	13	14	15	16	17	18	19	20										
MX150 ASSY BLD 2X10 BK A/12	334822316	A-BLACK	GCP	PLR	M-B	-	2	-	-	-	-	-	8	9	10	SALEABLE		34950-2011	34950-2021	34951-1631	34951-1641
		11	12	13	-	-	-	-	-	-	20										
MX150 ASSY BLD 2X10 BK A/6	334822317	A-BLACK	GCP	PLR	M-B	-	2	-	-	-	-	-	8	9	10	SALEABLE		34950-2011	34950-2021	34951-1631	34951-1641
		11	12	13	14	15	16	17	18	19	20										
MX150 ASSY BLD 2X10 BK A/6	334822318	A-BLACK	GCP	PLR	M-B	1	2	3	4	5	6	7	8	9	10	SALEABLE		34950-2011	34950-2021	34951-1631	34951-1641
		11	12	13	-	-	-	-	-	-	20										
MX150 ASSY BLD 2X10 BK A/15	334822319	A-BLACK	GCP	PLR	M-B	1	2	3	-	-	6	7	-	-	-	SALEABLE		34950-2011	34950-2021	34951-1631	34951-1641
		-	-	-	-	-	-	-	-	-	-										
MX150 ASSY BLD 2X10 BK A/17	334822320	A-BLACK	GCP	PLR	M-B	-	2	3	-	-	6	-	-	-	-	SALEABLE		34950-2011	34950-2021	34951-1631	34951-1641
		-	-	-	-	-	-	-	-	-	-										
MX150 ASSY BLD 2X10 BK A/5	334822321	A-BLACK	GCP	PLR	M-B	1	2	3	4	5	6	7	8	9	-	SALEABLE		34950-2011	34950-2021	34951-1631	34951-1641
		-	-	13	14	15	16	-	-	19	20										
MX150 ASSY BLD 2X10 BK A/11	334822322	A-BLACK	GCP	PLR	M-B	1	2	3	4	5	-	-	8	9	-	SALEABLE		34950-2011	34950-2021	34951-1631	34951-1641
		-	-	-	-	-	16	-	-	-	20										
MX150 ASSY BLD 2X10 BK A/5	334822323	A-BLACK	GCP	PLR	M-B	1	2	3	-	-	6	7	-	9	10	SALEABLE		34950-2011	34950-2021	34951-1631	34951-1641
		11	12	13	14	15	16	-	-	19	20										
MX150 ASSY BLD 2X10 BK A/6	334822324	A-BLACK	GCP	PLR	M-B	1	2	3	4	5	6	7	8	-	10	SALEABLE		34950-2011	34950-2021	34951-1631	34951-1641
		11	-	-	14	-	-	17	18	19	-										
MX150 ASSY BLD 2X10 LG B/16	334822325	B-LIGHT GRAY	GCP	PLR	M-B	-	-	-	-	-	-	-	-	-	-	SALEABLE		34950-2011	34950-2021	34951-1631	34951-1641
		-	-	-	-	-	-	17	18	19	20										
MX150 ASSY BLD 2X10 BK A/6	334822326	A-BLACK	GCP	PLR	M-B	1	2	-	-	-	6	7	8	9	10	SALEABLE		34950-2011	34950-2021	34951-1631	34951-1641
		11	12	13	-	-	16	17	18	-	20										
MX150 ASSY BLD 2X10 BK A/4	334822327	A-BLACK	GCP	PLR	M-B	1	2	-	4	5	6	7	8	9	10	SALEABLE		34950-2011	34950-2021	34951-1631	34951-1641
		11	12	13	-	-	16	17	18	-	20										

Downloaded from Arrow.com.

molex

MX150 2X10 BLADE SEALED ASSEMBLY MAT SEAL
BOM AND PIN OUT SHEET

ASSEMBLY DESCRIPTION	ASSEMBLY PART NUMBER	COMPONENT				BLOCKED TERMINALS										STATUS	COMMENT	OPTIONAL ATTACHMENTS SOLD SEPARATELY			
		THE PRESENCE OF AN ABBREVIATION INDICATES THE PRESENCE OF THAT COMPONENT				CAVITY WITH A NUMBER INDICATES BLOCKED TERMINAL POSITION CAVITY WITHOUT A NUMBER INDICATES OPEN TERMINAL POSITION															
		HOUSING KEY/COLOR	GROMMET CAP	PLR	MAT SEAL													BACKSHELL WITH RIBS	BACKSHELL WITHOUT RIBS	90^0 ADAPTOR WITH RIBS	90^0 ADAPTOR WITHOUT RIBS
MX150 ASSY BLD 2X10 BK A/13	334822328	A-BLACK	GCP	PLR	M-B	-	-	-	-	-	-	7	8	9	10	SALEABLE		34950-2011	34950-2021	34951-1631	34951-1641
						11	-	13	-	-	16	-	-	-	-						
MX150 ASSY BLD 2X10 LG B/14	334822329	B-LIGHT GRAY	GCP	PLR	M-B	-	-	-	-	-	-	-	-	-	10	SALEABLE		34950-2011	34950-2021	34951-1631	34951-1641
						11	-	-	-	15	16	17	-	-	20						
MX150 ASSY BLD 2X10 BK A/15	334822330	A-BLACK	GCP	PLR	M-B	-	2	-	-	5	6	-	-	9	10	SALEABLE		34950-2011	34950-2021	34951-1631	34951-1641
						-	-	-	-	-	-	-	-	-	-						
MX150 ASSY BLD 2X10 BK A/16	334822331	A-BLACK	GCP	PLR	M-B	-	2	-	-	-	6	-	-	9	10	SALEABLE		34950-2011	34950-2021	34951-1631	34951-1641
						-	-	-	-	-	-	-	-	-	-						
MX150 ASSY BLD 2X10 BK A/17	334822332	A-BLACK	GCP	PLR	M-B	-	-	-	-	-	6	-	-	9	10	SALEABLE		34950-2011	34950-2021	34951-1631	34951-1641
						-	-	-	-	-	-	-	-	-	-						
MX150 ASSY BLD 2X10 BK A/7	334822334	A-BLACK	GCP	PLR	M-B	-	-	3	4	-	6	7	-	9	10	SALEABLE		34950-2011	34950-2021	34951-1631	34951-1641
						-	-	13	14	-	16	17	18	19	20						
MX150 ASSY BLD 2X10 BK A/14	334822335	A-BLACK	GCP	PLR	M-B	-	-	3	4	-	-	7	-	-	10	SALEABLE		34950-2011	34950-2021	34951-1631	34951-1641
						-	-	-	-	-	16	17	-	-	-						
MX150 ASSY BLD 2X10 LG B/14	334822336	B-LIGHT GRAY	GCP	PLR	M-B	-	-	-	-	-	-	-	-	-	-	SALEABLE		34950-2011	34950-2021	34951-1631	34951-1641
						-	-	-	14	15	-	17	18	19	20						
MX150 ASSY BLD 2X10 LG B/18	334822337	B-LIGHT GRAY	GCP	PLR	M-B	-	-	-	-	-	-	-	-	-	-	SALEABLE		34950-2011	34950-2021	34951-1631	34951-1641
						-	-	-	-	-	-	-	-	19	20						
MX150 ASSY BLD 2X10 LG B/16	334822338	B-LIGHT GRAY	GCP	PLR	M-B	-	2	-	4	-	-	-	-	-	-	SALEABLE		34950-2011	34950-2021	34951-1631	34951-1641
						-	-	-	-	-	-	-	-	19	20						
MX150 ASSY BLD 2X10 LG B/9	334822339	B-LIGHT GRAY	GCP	PLR	M-B	-	-	-	-	5	6	-	-	-	-	SALEABLE		34950-2011	34950-2021	34951-1631	34951-1641
						11	12	13	14	15	-	17	18	19	20						
MX150 ASSY BLD 2X10 BK A/14	334822340	A-BLACK	GCP	PLR	M-B	-	2	3	-	5	6	-	-	-	-	SALEABLE		34950-2011	34950-2021	34951-1631	34951-1641
						-	12	13	-	-	-	-	-	-	-						
MX150 ASSY BLD 2X10 BK A/17	334822341	A-BLACK	GCP	PLR	M-B	-	-	-	-	5	6	-	-	-	-	SALEABLE		34950-2011	34950-2021	34951-1631	34951-1641
						-	-	-	-	-	-	-	-	19	-						
MX150 ASSY BLD 2X10 LG B/10	334822342	B-LIGHT GRAY	GCP	PLR	M-B	-	-	-	-	5	6	-	-	-	-	SALEABLE		34950-2011	34950-2021	34951-1631	34951-1641
						11	12	13	14	15	-	17	18	-	20						
MX150 ASSY BLD 2X10 LG B/17	334822343	B-LIGHT GRAY	GCP	PLR	M-B	-	-	-	-	-	-	-	-	-	-	SALEABLE		34950-2011	34950-2021	34951-1631	34951-1641
						-	-	-	-	-	-	17	18	-	20						
MX150 ASSY BLD 2X10 LG B/15	334822344	B-LIGHT GRAY	GCP	PLR	M-B	-	-	-	-	-	-	-	-	-	-	SALEABLE		34950-2011	34950-2021	34951-1631	34951-1641
						-	-	-	14	15	-	17	18	-	20						
MX150 ASSY BLD 2X10 LG B/19	334822345	B-LIGHT GRAY	GCP	PLR	M-B	-	-	-	-	-	-	-	-	-	-	SALEABLE		34950-2011	34950-2021	34951-1631	34951-1641
						-	-	-	-	-	-	-	-	-	20						
MX150 ASSY BLD 2X10 BK A/18	334822346	A-BLACK	GCP	PLR	M-B	-	-	-	-	-	-	-	-	-	-	SALEABLE		34950-2011	34950-2021	34951-1631	34951-1641
						-	-	-	-	-	-	-	-	19	20						
MX150 ASSY BLD 2X10 BK A/4	334822347	A-BLACK	GCP	PLR	M-B	-	2	3	4	5	6	7	8	9	-	SALEABLE		34950-2011	34950-2021	34951-1631	34951-1641
						-	12	13	14	15	16	17	18	19	-						
MX150 ASSY BLD 2X10 BK A/16	334822348	A-BLACK	GCP	PLR	M-B	-	2	-	-	-	6	-	-	-	10	SALEABLE		34950-2011	34950-2021	34951-1631	34951-1641
						-	-	-	-	15	-	-	-	-	-						
MX150 ASSY BLD 2X10 BK A/12	334822349	A-BLACK	GCP	PLR	M-B	-	-	3	4	5	-	7	-	-	10	SALEABLE		34950-2011	34950-2021	34951-1631	34951-1641
						-	-	-	-	-	-	-	18	19	20						
MX150 ASSY BLD 2X10 BK A/9	334822350	A-BLACK	GCP	PLR	M-B	-	-	3	4	-	6	-	8	9	-	SALEABLE		34950-2011	34950-2021	34951-1631	34951-1641
						-	12	13	14	15	16	17	-	-	-						
MX150 ASSY BLD 2X10 BK A/15	334822351	A-BLACK	GCP	PLR	M-B	-	-	3	4	5	-	-	-	-	-	SALEABLE		34950-2011	34950-2021	34951-1631	34951-1641
						-	-	-	-	-	-	-	18	19	-						
MX150 ASSY BLD 2X10 BK A/14	334822352	A-BLACK	GCP	PLR	M-B	-	-	3	4	5	6	-	-	-	-	SALEABLE		34950-2011	34950-2021	34951-1631	34951-1641
						-	-	-	-	-	-	-	18	19	-						
MX150 ASSY BLD 2X10 LG B/17	334822353	B-LIGHT GRAY	GCP	PLR	M-B	-	-	-	-	5	6	-	-	-	-	SALEABLE		34950-2011	34950-2021	34951-1631	34951-1641
						-	-	-	-	-	-	-	-	19	-						
MX150 ASSY BLD 2X10 BK A/15	334822354	A-BLACK	GCP	PLR	M-B	-	2	3	-	-	6	-	-	-	10	SALEABLE		34950-2011	34950-2021	34951-1631	34951-1641
						-	12	-	-	-	-	-	-	-	-						
MX150 ASSY BLD 2X10 BK A/8	334822355	A-BLACK	GCP	PLR	M-B	1	-	3	4	5	6	7	8	9	10	SALEABLE		34950-2011	34950-2021	34951-1631	34951-1641
						11	12	-	-	-	-	-	-	-	20						

Downloaded from Arrow.com.

molex

MX150 2X10 BLADE SEALED ASSEMBLY MAT SEAL
BOM AND PIN OUT SHEET

ASSEMBLY DESCRIPTION	ASSEMBLY PART NUMBER	COMPONENT				BLOCKED TERMINALS										STATUS	COMMENT	OPTIONAL ATTACHMENTS SOLD SEPARATELY			
		THE PRESENCE OF AN ABBREVIATION INDICATES THE PRESENCE OF THAT COMPONENT				CAVITY WITH A NUMBER INDICATES BLOCKED TERMINAL POSITION CAVITY WITHOUT A NUMBER INDICATES OPEN TERMINAL POSITION															
		HOUSING KEY/COLOR	GROMMET CAP	PLR	MAT SEAL													BACKSHELL WITH RIBS	BACKSHELL WITHOUT RIBS	90^0 ADAPTOR WITH RIBS	90^0 ADAPTOR WITHOUT RIBS
MX150 ASSY BLD 2X10 BK A/14	334822356	A-BLACK	GCP	PLR	M-B	1	-	-	-	-	-	-	-	9	10	SALEABLE		34950-2011	34950-2021	34951-1631	34951-1641
						11	12	-	-	-	-	-	-	-	20						
MX150 ASSY BLD 2X10 LG B/6	334822357	B-LIGHT GRAY	GCP	PLR	M-B	-	-	-	-	5	6	7	8	9	10	SALEABLE		34950-2011	34950-2021	34951-1631	34951-1641
						11	12	13	14	-	-	17	18	19	20						
MX150 ASSY BLD 2X10 BK A/12	334822358	A-BLACK	GCP	PLR	M-B	-	-	-	-	5	-	-	-	9	-	SALEABLE		34950-2011	34950-2021	34951-1631	34951-1641
						-	12	-	-	15	16	-	18	19	20						
MX150 ASSY BLD 2X10 LG B/8	334822359	B-LIGHT GRAY	GCP	PLR	M-B	1	2	3	4	5	6	7	8	-	-	SALEABLE		34950-2011	34950-2021	34951-1631	34951-1641
						-	-	13	-	-	16	-	-	19	20						
MX150 ASSY BLD 2X10 BK A/11	334822360	A-BLACK	GCP	PLR	M-B	1	2	-	-	-	-	-	8	9	10	SALEABLE		34950-2011	34950-2021	34951-1631	34951-1641
						-	-	-	14	-	-	17	18	19	-						
MX150 ASSY BLD 2X10 BK A/11	334822361	A-BLACK	GCP	PLR	M-B	1	2	-	-	-	-	-	-	9	10	SALEABLE		34950-2011	34950-2021	34951-1631	34951-1641
						-	-	-	14	-	16	17	18	19	-						
MX150 ASSY BLD 2X10 BK A/14	334822362	A-BLACK	GCP	PLR	M-B	-	-	-	-	-	-	-	-	9	10	SALEABLE		34950-2011	34950-2021	34951-1631	34951-1641
						-	-	-	14	-	-	17	18	19	-						
MX150 ASSY BLD 2X10 BK A/10	334822363	A-BLACK	GCP	PLR	M-B	1	2	3	-	-	6	7	-	-	10	SALEABLE		34950-2011	34950-2021	34951-1631	34951-1641
						11	12	-	-	-	16	-	-	19	-						
MX150 ASSY BLD 2X10 BK A/8	334822364	A-BLACK	GCP	PLR	M-B	1	-	-	-	-	-	-	8	9	10	SALEABLE		34950-2011	34950-2021	34951-1631	34951-1641
						-	12	-	14	15	16	17	18	19	20						
MX150 ASSY BLD 2X10 BK A/12	334822365	A-BLACK	GCP	PLR	M-B	1	-	-	-	-	-	-	-	-	-	SALEABLE		34950-2011	34950-2021	34951-1631	34951-1641
						-	-	-	14	15	16	17	18	19	20						
MX150 ASSY BLD 2X10 BK A/6	334822366	A-BLACK	GCP	PLR	M-B	1	-	-	-	-	-	-	8	9	10	SALEABLE		34950-2011	34950-2021	34951-1631	34951-1641
						11	12	13	14	15	16	17	18	19	20						
MX150 ASSY BLD 2X10 BK A/16	334822367	A-BLACK	GCP	PLR	M-B	1	-	-	-	-	-	-	-	-	-	SALEABLE		34950-2011	34950-2021	34951-1631	34951-1641
						11	-	-	-	-	-	-	-	19	20						
MX150 ASSY BLD 2X10 BK A/16	334822368	A-BLACK	GCP	PLR	M-B	-	-	3	-	-	6	-	8	9	-	SALEABLE		34950-2011	34950-2021	34951-1631	34951-1641
						-	-	-	-	-	-	-	-	-	-						
MX150 ASSY BLD 2X10 BK A/15	334822369	A-BLACK	GCP	PLR	M-B	-	-	-	-	-	-	-	-	9	-	SALEABLE		34950-2011	34950-2021	34951-1631	34951-1641
						-	-	-	-	-	-	17	18	19	20						
MX150 ASSY BLD 2X10 BK A/18	334822370	A-BLACK	GCP	PLR	M-B	-	-	-	-	-	6	-	-	-	-	SALEABLE		34950-2011	34950-2021	34951-1631	34951-1641
						-	-	-	-	-	-	-	-	19	-						
MX150 ASSY BLD 2X10 LG B/18	334822371	B-LIGHT GRAY	GCP	PLR	M-B	-	-	-	-	-	6	-	-	-	-	SALEABLE		34950-2011	34950-2021	34951-1631	34951-1641
						-	-	-	-	-	-	-	-	19	-						
MX150 ASSY BLD 2X10 BK A/10	334822372	A-BLACK	GCP	PLR	M-B	1	2	-	-	-	-	7	8	9	10	SALEABLE		34950-2011	34950-2021	34951-1631	34951-1641
						-	12	13	-	-	-	17	18	-	-						
MX150 ASSY BLD 2X10 BK A/14	334822373	A-BLACK	GCP	PLR	M-B	-	-	3	-	5	6	-	-	-	-	SALEABLE		34950-2011	34950-2021	34951-1631	34951-1641
						11	12	13	-	-	-	-	-	-	-						
MX150 ASSY BLD 2X10 BK A/16	334822374	A-BLACK	GCP	PLR	M-B	-	-	3	-	-	6	-	-	-	-	SALEABLE		34950-2011	34950-2021	34951-1631	34951-1641
						-	12	13	-	-	-	-	-	-	-						
MX150 ASSY BLD 2X10 BK A/18	334822375	A-BLACK	GCP	PLR	M-B	-	-	-	-	-	-	-	8	-	-	SALEABLE		34950-2011	34950-2021	34951-1631	34951-1641
						-	-	-	-	-	-	17	-	-	-						
MX150 ASSY BLD 2X10 BK A/15	334822376	A-BLACK	GCP	PLR	M-B	-	-	-	-	5	-	-	8	-	-	SALEABLE		34950-2011	34950-2021	34951-1631	34951-1641
						11	-	-	14	-	-	17	-	-	-						
MX150 ASSY BLD 2X10 BK A/12	334822377	A-BLACK	GCP	PLR	M-B	1	-	3	-	5	6	7	-	-	-	SALEABLE		34950-2011	34950-2021	34951-1631	34951-1641
						11	12	13	-	-	-	-	-	-	-						
MX150 ASSY BLD 2X10 BK A/12	334822378	A-BLACK	GCP	PLR	M-B	1	-	3	4	-	-	-	-	9	-	SALEABLE		34950-2011	34950-2021	34951-1631	34951-1641
						11	12	13	-	-	-	-	-	-	20						
MX150 ASSY BLD 2X10 BK A/15	334822379	A-BLACK	GCP	PLR	M-B	-	-	-	-	-	-	-	-	9	-	SALEABLE		34950-2011	34950-2021	34951-1631	34951-1641
						11	12	13	-	-	-	-	-	-	20						
MX150 ASSY BLD 2X10 BK A/12	334822380	A-BLACK	GCP	PLR	M-B	-	2	3	-	5	6	-	8	-	-	SALEABLE		34950-2011	34950-2021	34951-1631	34951-1641
						11	12	13	-	-	-	-	-	-	-						
MX150 ASSY BLD 2X10 BK A/14	334822381	A-BLACK	GCP	PLR	M-B	-	2	3	-	-	6	-	8	-	-	SALEABLE		34950-2011	34950-2021	34951-1631	34951-1641
						-	12	13	-	-	-	-	-	-	-						
MX150 ASSY BLD 2X10 BK A/10	334822382	A-BLACK	GCP	PLR	M-B	1	2	3	-	5	6	7	8	-	-	SALEABLE		34950-2011	34950-2021	34951-1631	34951-1641
						11	12	13	-	-	-	-	-	-	-						

Downloaded from Arrow.com.

molex

MX150 2X10 BLADE SEALED ASSEMBLY MAT SEAL
BOM AND PIN OUT SHEET

ASSEMBLY DESCRIPTION	ASSEMBLY PART NUMBER	COMPONENT				BLOCKED TERMINALS										STATUS	COMMENT	OPTIONAL ATTACHMENTS SOLD SEPARATELY			
		THE PRESENCE OF AN ABBREVIATION INDICATES THE PRESENCE OF THAT COMPONENT				CAVITY WITH A NUMBER INDICATES BLOCKED TERMINAL POSITION CAVITY WITHOUT A NUMBER INDICATES OPEN TERMINAL POSITION															
		HOUSING KEY/COLOR	GROMMET CAP	PLR	MAT SEAL													BACKSHELL WITH RIBS	BACKSHELL WITHOUT RIBS	90^0 ADAPTOR WITH RIBS	90^0 ADAPTOR WITHOUT RIBS
MX150 ASSY BLD 2X10 BK A/15	334822383	A-BLACK	GCP	PLR	M-B	-	-	-	-	-	-	-	-	9	10	SALEABLE		34950-2011	34950-2021	34951-1631	34951-1641
		11	12	-	-	-	-	-	-	-	20										
MX150 ASSY BLD 2X10 BK A/13	334822384	A-BLACK	GCP	PLR	M-B	1	-	3	4	-	-	-	-	9	10	SALEABLE		34950-2011	34950-2021	34951-1631	34951-1641
		-	12	-	-	-	-	-	-	-	20										
MX150 ASSY BLD 2X10 BK A/8	334822385	A-BLACK	GCP	PLR	M-B	1	2	3	4	5	6	-	8	-	-	SALEABLE		34950-2011	34950-2021	34951-1631	34951-1641
		-	-	13	-	-	-	17	18	19	20										
MX150 ASSY BLD 2X10 BK A/14	334822386	A-BLACK	GCP	PLR	M-B	-	-	-	-	-	-	7	-	9	-	SALEABLE		34950-2011	34950-2021	34951-1631	34951-1641
		-	-	-	14	15	-	-	-	19	20										
MX150 ASSY BLD 2X10 BK A/10	334822387	A-BLACK	GCP	PLR	M-B	1	2	3	4	5	6	-	8	-	-	SALEABLE		34950-2011	34950-2021	34951-1631	34951-1641
		-	-	13	-	-	-	-	-	19	20										
MX150 ASSY BLD 2X10 BK A/12	334822388	A-BLACK	GCP	PLR	M-B	1	-	3	4	-	-	-	-	9	10	SALEABLE		34950-2011	34950-2021	34951-1631	34951-1641
		11	12	-	-	-	-	-	-	-	20										
MX150 ASSY BLD 2X10 BK A/15	334822389	A-BLACK	GCP	PLR	M-B	-	-	-	-	-	-	-	-	9	10	SALEABLE		34950-2011	34950-2021	34951-1631	34951-1641
		11	12	-	-	-	-	-	-	-	20										
MX150 ASSY BLD 2X10 BK A/20	334822390	A-BLACK	GCO	PLR	M-B	-	-	-	-	-	-	-	-	-	-	SALEABLE		34950-2011	34950-2021	34951-1631	34951-1641
		-	-	-	-	-	-	-	-	-	-										
MX150 ASSY BLD 2X10 BK A/13	334822391	A-BLACK	GCP	PLR	M-B	-	-	3	-	-	-	-	-	-	-	SALEABLE		34950-2011	34950-2021	34951-1631	34951-1641
		11	-	-	-	-	16	17	18	19	20										
MX150 ASSY BLD 2X10 BK A/11	334822392	A-BLACK	GCP	PLR	M-B	-	-	3	-	-	-	-	-	-	-	SALEABLE		34950-2011	34950-2021	34951-1631	34951-1641
		11	12	13	-	-	16	17	18	19	20										
MX150 ASSY BLD 2X10 BK A/8	334822393	A-BLACK	GCP	PLR	M-B	1	-	3	-	-	-	-	-	9	10	SALEABLE		34950-2011	34950-2021	34951-1631	34951-1641
		11	12	13	-	-	16	17	18	19	20										
MX150 ASSY BLD 2X10 BK A/10	334822394	A-BLACK	GCP	PLR	M-B	1	-	3	-	-	-	-	-	9	10	SALEABLE		34950-2011	34950-2021	34951-1631	34951-1641
		11	-	-	-	-	16	17	18	19	20										
MX150 ASSY BLD 2X10 BK A/19	334822395	A-BLACK	GCP	PLR	M-B	-	-	-	-	-	-	-	-	-	-	SALEABLE		34950-2011	34950-2021	34951-1631	34951-1641
		-	-	-	-	-	-	-	18	-	-										
MX150 ASSY BLD 2X10 SG D/19	334822396	D-STONE GRAY	GCP	PLR	M-B	1	-	-	-	-	-	-	-	-	-	SALEABLE		34950-2011	34950-2021	34951-1631	34951-1641
		-	-	-	-	-	-	-	-	-	-										
MX150 ASSY BLD 2X10 DG C/19	334822397	C-DARK GRAY	GCP	PLR	M-B	1	-	-	-	-	-	-	-	-	-	SALEABLE		34950-2011	34950-2021	34951-1631	34951-1641
		-	-	-	-	-	-	-	-	-	-										
MX150 ASSY BLD 2X10 BK A/18	334822398	A-BLACK	GCP	PLR	M-B	-	-	-	-	-	-	-	-	-	-	SALEABLE		34950-2011	34950-2021	34951-1631	34951-1641
		-	-	-	-	-	-	-	-	19	20										
MX150 ASSY BLD 2X10 BK A/9	334822399	A-BLACK	GCP	PLR	M-B	1	2	-	-	-	-	-	-	-	-	SALEABLE		34950-2011	34950-2021	34951-1631	34951-1641
		-	12	13	14	15	16	17	18	19	20										
MX150 ASSY BLD 2X10 BK A/16	334822400	A-BLACK	GCP	PLR	M-B	1	2	-	-	-	-	-	-	-	-	SALEABLE		34950-2011	34950-2021	34951-1631	34951-1641
		-	-	-	-	-	-	-	-	19	20										
MX150 ASSY BLD 2X10 BK A/18	334822401	A-BLACK	GCP	PLR	M-B	-	-	-	-	-	-	-	-	-	-	SALEABLE		34950-2011	34950-2021	34951-1631	34951-1641
		-	12	-	14	-	-	-	-	-	-										
MX150 ASSY BLD 2X10 BK A/13	334822402	A-BLACK	GCP	PLR	M-B	-	-	3	-	-	6	-	-	-	-	SALEABLE		34950-2011	34950-2021	34951-1631	34951-1641
		11	-	-	-	-	-	17	18	19	20										
MX150 ASSY BLD 2X10 BK A/16	334822403	A-BLACK	GCP	PLR	M-B	1	-	-	-	-	-	-	8	9	-	SALEABLE		34950-2011	34950-2021	34951-1631	34951-1641
		-	-	-	-	-	16	-	-	-	-										
MX150 ASSY BLD 2X10 BK A/6	334822404	A-BLACK	GCP	PLR	M-B	1	2	3	4	5	6	7	8	-	-	SALEABLE		34950-2011	34950-2021	34951-1631	34951-1641
		-	12	13	14	-	16	-	-	19	20										
MX150 ASSY BLD 2X10 BK A/17	334822405	A-BLACK	GCP	PLR	M-B	-	-	-	-	-	-	-	-	-	-	SALEABLE		34950-2011	34950-2021	34951-1631	34951-1641
		-	-	-	-	15	-	-	-	19	20										
MX150 ASSY BLD 2X10 BK A/14	334822406	A-BLACK	GCP	PLR	M-B	-	-	-	-	-	-	-	-	9	-	SALEABLE		34950-2011	34950-2021	34951-1631	34951-1641
		-	-	13	14	-	-	-	18	19	20										
MX150 ASSY BLD 2X10 BK A/8	334822407	A-BLACK	GCP	PLR	M-B	1	2	-	-	-	-	-	-	-	-	SALEABLE		34950-2011	34950-2021	34951-1631	34951-1641
		11	12	13	14	15	16	17	18	19	20										
MX150 ASSY BLD 2X10 BK A/10	334822408	A-BLACK	GCP	PLR	M-B	1	2	-	-	-	-	-	-	-	-	SALEABLE		34950-2011	34950-2021	34951-1631	34951-1641
		-	-	13	14	15	16	17	18	19	20										
MX150 ASSY BLD 2X10 BK A/15	334822409	A-BLACK	GCP	PLR	M-B	-	-	-	-	-	-	-	-	-	10	SALEABLE		34950-2011	34950-2021	34951-1631	34951-1641
		11	12	-	-	15	-	-	-	-	20										

Downloaded from Arrow.com.

molex

MX150 2X10 BLADE SEALED ASSEMBLY MAT SEAL
BOM AND PIN OUT SHEET

ASSEMBLY DESCRIPTION	ASSEMBLY PART NUMBER	COMPONENT				BLOCKED TERMINALS										STATUS	COMMENT	OPTIONAL ATTACHMENTS SOLD SEPARATELY			
		THE PRESENCE OF AN ABBREVIATION INDICATES THE PRESENCE OF THAT COMPONENT				CAVITY WITH A NUMBER INDICATES BLOCKED TERMINAL POSITION CAVITY WITHOUT A NUMBER INDICATES OPEN TERMINAL POSITION															
		HOUSING KEY/COLOR	GROMMET CAP	PLR	MAT SEAL													BACKSHELL WITH RIBS	BACKSHELL WITHOUT RIBS	90^0 ADAPTOR WITH RIBS	90^0 ADAPTOR WITHOUT RIBS
MX150 ASSY BLD 2X10 BK A/17	334822410	A-BLACK	GCP	PLR	M-B	1	-	-	-	-	-	-	-	-	10	SALEABLE		34950-2011	34950-2021	34951-1631	34951-1641
						-	-	-	-	-	-	-	-	-	20						
MX150 ASSY BLD 2X10 BK A/17	334822411	A-BLACK	GCP	PLR	M-B	-	2	-	-	5	6	-	-	-	-	SALEABLE		34950-2011	34950-2021	34951-1631	34951-1641
						-	-	-	-	-	-	-	-	-	-						
MX150 ASSY BLD 2X10 BK A/15	334822412	A-BLACK	GCP	PLR	M-B	-	2	-	-	5	6	7	-	-	-	SALEABLE		34950-2011	34950-2021	34951-1631	34951-1641
						-	-	-	14	-	-	-	-	-	-						
MX150 ASSY BLD 2X10 BK A/15	334822413	A-BLACK	GCP	PLR	M-B	-	2	-	-	5	6	-	-	-	-	SALEABLE		34950-2011	34950-2021	34951-1631	34951-1641
						11	-	-	-	-	-	-	-	-	20						
MX150 ASSY BLD 2X10 BK A/14	334822414	A-BLACK	GCP	PLR	M-B	-	2	3	-	5	6	-	-	-	-	SALEABLE		34950-2011	34950-2021	34951-1631	34951-1641
						-	12	-	-	-	-	-	-	19	-						
MX150 ASSY BLD 2X10 BK A/13	334822415	A-BLACK	GCP	PLR	M-B	-	2	-	-	5	6	7	-	-	-	SALEABLE		34950-2011	34950-2021	34951-1631	34951-1641
						11	-	-	14	-	-	-	-	-	20						
MX150 ASSY BLD 2X10 BK A/12	334822416	A-BLACK	GCP	PLR	M-B	-	2	3	-	5	6	-	-	-	-	SALEABLE		34950-2011	34950-2021	34951-1631	34951-1641
						11	12	-	-	-	-	-	-	19	20						
MX150 ASSY BLD 2X10 BK A/12	334822417	A-BLACK	GCP	PLR	M-B	-	2	3	-	5	6	7	-	-	-	SALEABLE		34950-2011	34950-2021	34951-1631	34951-1641
						-	12	-	14	-	-	-	-	19	-						
MX150 ASSY BLD 2X10 BK A/10	334822418	A-BLACK	GCP	PLR	M-B	-	2	3	-	5	6	7	-	-	-	SALEABLE		34950-2011	34950-2021	34951-1631	34951-1641
						11	12	-	14	-	-	-	-	19	20						
MX150 ASSY BLD 2X10 BK A/9	334822419	A-BLACK	GCP	PLR	M-B	-	2	-	4	5	6	7	8	9	10	SALEABLE		34950-2011	34950-2021	34951-1631	34951-1641
						-	-	13	14	-	-	17	-	-	-						
MX150 ASSY BLD 2X10 BK A/7	334822420	A-BLACK	GCP	PLR	M-B	-	2	-	4	5	6	7	8	9	10	SALEABLE		34950-2011	34950-2021	34951-1631	34951-1641
						11	-	13	14	-	-	17	-	-	20						
MX150 ASSY BLD 2X10 BK A/6	334822421	A-BLACK	GCP	PLR	M-B	-	2	3	4	5	6	7	8	9	10	SALEABLE		34950-2011	34950-2021	34951-1631	34951-1641
						-	12	13	14	-	-	17	-	19	-						
MX150 ASSY BLD 2X10 BK A/4	334822422	A-BLACK	GCP	PLR	M-B	-	2	3	4	5	6	7	8	9	10	SALEABLE		34950-2011	34950-2021	34951-1631	34951-1641
						11	12	13	14	-	-	17	-	19	20						
MX150 ASSY BLD 2X10 LTB A/20	334822423	A-LIGHT BLUE	GCO	PLR	M-B	-	-	-	-	-	-	-	-	-	-	SALEABLE		34950-2011	34950-2021	34951-1631	34951-1641
						-	-	-	-	-	-	-	-	-	-						
MX150 ASSY BLD 2X10 BK A/10	334822424	A-BLACK	GCP	PLR	M-B	-	2	-	-	-	-	-	8	9	10	SALEABLE		34950-2011	34950-2021	34951-1631	34951-1641
						11	-	-	-	-	16	17	18	19	20						
MX150 ASSY BLD 2X10 BK A/12	334822425	A-BLACK	GCP	PLR	M-B	-	-	-	-	-	-	-	-	9	10	SALEABLE		34950-2011	34950-2021	34951-1631	34951-1641
						11	-	-	-	-	16	17	18	19	20						
MX150 ASSY BLD 2X10 BK A/6	334822426	A-BLACK	GCP	PLR	M-B	-	2	-	-	-	-	-	8	9	10	SALEABLE		34950-2011	34950-2021	34951-1631	34951-1641
						11	12	13	14	15	16	17	18	19	20						
MX150 ASSY BLD 2X10 BK A/12	334822427	A-BLACK	GCP	PLR	M-B	1	-	-	-	-	-	-	-	-	-	SALEABLE		34950-2011	34950-2021	34951-1631	34951-1641
						-	-	-	14	15	16	17	18	19	20						
MX150 ASSY BLD 2X10 BK A/17	334822428	A-BLACK	GCP	PLR	M-B	-	-	-	-	-	-	-	-	-	-	SALEABLE		34950-2011	34950-2021	34951-1631	34951-1641
						-	-	-	-	-	-	-	18	19	20						
MX150 ASSY BLD 2X10 LTB A/16	334822429	A-LIGHT BLUE	GCP	PLR	M-B	-	-	3	-	-	-	7	-	-	-	SALEABLE		34950-2011	34950-2021	34951-1631	34951-1641
						-	-	13	-	-	-	17	-	-	-						
MX150 ASSY BLD 2X10 LTB A/0	334822430	A-LIGHT BLUE	GCP	PLR	M-B	1	2	3	4	5	6	7	8	9	10	SALEABLE		34950-2011	34950-2021	34951-1631	34951-1641
						11	12	13	14	15	16	17	18	19	20						
MX150 ASSY BLD 2X10 LTB A/19	334822431	A-LIGHT BLUE	GCP	PLR	M-B	-	-	-	-	-	-	-	-	-	-	SALEABLE		34950-2011	34950-2021	34951-1631	34951-1641
						-	-	-	-	-	-	-	-	-	20						
MX150 ASSY BLD 2X10 LTB A/14	334822432	A-LIGHT BLUE	GCP	PLR	M-B	-	-	3	-	-	-	7	-	-	-	SALEABLE		34950-2011	34950-2021	34951-1631	34951-1641
						11	12	13	-	-	-	17	-	-	-						
MX150 ASSY BLD 2X10 BK A/8	334822433	A-BLACK	GCP	PLR	M-B	-	2	3	4	5	6	7	-	-	10	SALEABLE		34950-2011	34950-2021	34951-1631	34951-1641
						-	-	-	-	15	-	17	18	19	20						
MX150 ASSY BLD 2X10 BK A/14	334822434	A-BLACK	GCP	PLR	M-B	-	-	-	-	-	-	-	-	-	-	SALEABLE		34950-2011	34950-2021	34951-1631	34951-1641
						-	-	13	14	15	-	-	18	19	20						
MX150 ASSY BLD 2X10 BK A/7	334822435	A-BLACK	GCP	PLR	M-B	-	2	3	4	5	6	7	-	9	10	SALEABLE		34950-2011	34950-2021	34951-1631	34951-1641
						-	-	-	-	15	-	17	18	19	20						
MX150 ASSY BLD 2X10 BK A/17	334822436	A-BLACK	GCP	PLR	M-B	-	-	-	-	-	-	-	-	-	-	SALEABLE		34950-2011	34950-2021	34951-1631	34951-1641
						-	-	-	-	15	16	-	-	-	20						

Downloaded from Arrow.com.

molex

MX150 2X10 BLADE SEALED ASSEMBLY MAT SEAL
BOM AND PIN OUT SHEET

ASSEMBLY DESCRIPTION	ASSEMBLY PART NUMBER	COMPONENT				BLOCKED TERMINALS										STATUS	COMMENT	OPTIONAL ATTACHMENTS SOLD SEPARATELY			
		THE PRESENCE OF AN ABBREVIATION INDICATES THE PRESENCE OF THAT COMPONENT				CAVITY WITH A NUMBER INDICATES BLOCKED TERMINAL POSITION CAVITY WITHOUT A NUMBER INDICATES OPEN TERMINAL POSITION												BACKSHELL WITH RIBS	BACKSHELL WITHOUT RIBS	90^0 ADAPTOR WITH RIBS	90^0 ADAPTOR WITHOUT RIBS
		HOUSING KEY/COLOR	GROMMET CAP	PLR	MAT SEAL																
MX150 ASSY BLD 2X10 BK A/12	334822437	A-BLACK	GCP	PLR	M-B	-	-	-	-	-	-	7	8	-	-	SALEABLE		34950-2011	34950-2021	34951-1631	34951-1641
						-	12	13	14	15	16	17	-	-	-						
MX150 ASSY BLD 2X10 LG B/12	334822438	B-LIGHT GRAY	GCP	PLR	M-B	-	-	-	4	5	6	-	8	-	-	SALEABLE		34950-2011	34950-2021	34951-1631	34951-1641
						-	-	13	-	-	16	-	-	19	20						
MX150 ASSY BLD 2X10 BK A/3	334822439	A-BLACK	GCP	PLR	M-B	1	2	3	4	5	6	7	-	9	10	SALEABLE		34950-2011	34950-2021	34951-1631	34951-1641
						11	12	13	-	-	16	17	18	19	20						
MX150 ASSY BLD 2X10 LG B/17	334822440	B-LIGHT GRAY	GCP	PLR	M-B	-	-	-	-	-	-	-	8	9	10	SALEABLE		34950-2011	34950-2021	34951-1631	34951-1641
						-	-	-	-	-	-	-	-	-	-						
MX150 ASSY BLD 2X10 LG B/19	334822441	B-LIGHT GRAY	GCP	PLR	M-B	-	-	-	-	-	-	7	-	-	-	SALEABLE		34950-2011	34950-2021	34951-1631	34951-1641
						-	-	-	-	-	-	-	-	-	-						
MX150 ASSY BLD 2X10 BK A/16	334822442	A-BLACK	GCP	PLR	M-B	-	-	-	-	-	-	7	8	-	-	SALEABLE		34950-2011	34950-2021	34951-1631	34951-1641
						-	-	-	-	15	16	-	-	-	-						
MX150 ASSY BLD 2X10 BK A/17	334822443	A-BLACK	GCP	PLR	M-B	-	-	-	-	-	-	-	-	-	-	SALEABLE		34950-2011	34950-2021	34951-1631	34951-1641
						-	-	-	-	-	-	17	18	19	-						
MX150 ASSY BLD 2X10 BK A/15	334822444	A-BLACK	GCP	PLR	M-B	-	-	3	-	5	-	-	-	-	-	SALEABLE		34950-2011	34950-2021	34951-1631	34951-1641
						-	-	-	-	-	-	17	-	19	20						
MX150 ASSY BLD 2X10 BK A/16	334822445	A-BLACK	GCP	PLR	M-B	1	-	-	-	-	-	-	-	-	10	SALEABLE		34950-2011	34950-2021	34951-1631	34951-1641
						11	-	-	-	-	-	-	-	-	20						
MX150 ASSY BLD 2X10 BK A/10	334822446	A-BLACK	GCP	PLR	M-B	-	-	-	-	5	6	7	8	9	10	SALEABLE		34950-2011	34950-2021	34951-1631	34951-1641
						11	12	-	-	15	-	-	-	-	20						
MX150 ASSY BLD 2X10 BK A/13	334822447	A-BLACK	GCP	PLR	M-B	-	-	-	-	5	6	7	8	9	-	SALEABLE		34950-2011	34950-2021	34951-1631	34951-1641
						11	12	-	-	-	-	-	-	-	-						
MX150 ASSY BLD 2X10 BK A/12	334822448	A-BLACK	GCP	PLR	M-B	-	2	-	-	5	-	7	-	-	10	SALEABLE		34950-2011	34950-2021	34951-1631	34951-1641
						-	-	-	14	15	16	-	-	19	-						
MX150 ASSY BLD 2X10 BK A/13	334822450	A-BLACK	GCP	PLR	M-B	1	-	-	-	-	6	-	-	-	10	SALEABLE		34950-2011	34950-2021	34951-1631	34951-1641
						11	12	-	-	-	-	-	18	-	20						
MX150 ASSY BLD 2X10 BK A/9	334822451	A-BLACK	GCP	PLR	M-B	1	-	-	4	-	6	-	-	-	10	SALEABLE		34950-2011	34950-2021	34951-1631	34951-1641
						11	12	13	14	15	16	-	-	-	20						
MX150 ASSY BLD 2X10 BK A/9	334822452	A-BLACK	GCP	PLR	M-B	-	-	-	4	-	-	-	-	-	-	SALEABLE		34950-2011	34950-2021	34951-1631	34951-1641
						11	12	13	14	15	16	17	18	19	20						

Downloaded from Arrow.com.

TABLE OF CONTENTS

SHEET NO.	SHEET DESCRIPTION
1	NOTES AND BOM
2	CONFIGURATIONS
3-4	KEY CONFIGURATIONS
5	BLADE SEALED ASSEMBLY
6	SYSTEM PACKAGING
7	BACKSHELL NOTES
8	BACKSHELL
9	BACKSHELL CONFIGURATIONS

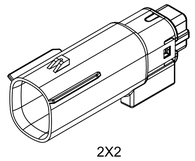

2X2

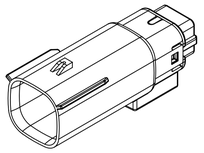

2X3

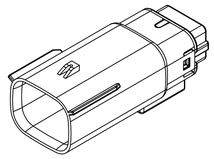

2X4

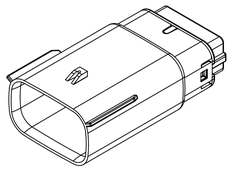

2X6

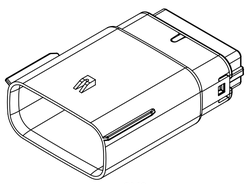

2X8

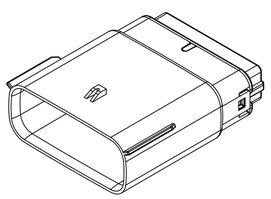

2X10

NOTES: VALID UNLESS OTHERWISE SPECIFIED

1. GENERAL:
a. APPLICATION SPECIFICATION SEE: AS-33472-100
-CONTAINS: PRODUCT INTRODUCTION, PRODUCT SUMMARY, CONNECTOR ASSEMBLY, PACKAGING INFORMATION, CONNECTOR MATING, SERVICE INSTRUCTIONS, ELECTRICAL CONTINUITY CHECKING, CRIMPING, AND TROUBLESHOOTING.
-DESIGNED TO MATE WITH RECEPTACLE SEALED ASSEMBLY AS SPECIFIED IN THE MATING CONNECTOR DRAWINGS CHART.
*DENOTES DRAWINGS THAT CAN BE ACCESSED AT <http://ewcap.uscarteams.org/>.
-ASSEMBLY SHIPPED WITH PLR IN PRE-LOCK POSITION (SEE PLR PRE-LOCK VIEW SHEET 5).

b. PRODUCT SPECIFICATION SEE:
-STANDARD CONFIGURATION: PS-33472-000
-UL V0 CONFIGURATION: TBD
CONTAINS: PRODUCT INTRODUCTION, PRODUCT SUMMARY, RATINGS (CURRENT, TEMPERATURE, SEALING, AND FLAMMABILITY), TERMINALS, WIRE DIAMETER RANGE, PRODUCT VALIDATION, AND PRODUCT DEVIATIONS.
(E3)
c. PACKAGING SPECIFICATION PER MOLEX DRAWING: PK-31300-903
d. PARTS MUST BE IN COMPLIANCE TO MOLEX CHEMICAL SUBSTANCES FOR PRODUCTS AND PACKAGING SPECIFICATION: QEHS-699000-300
e. DATA MUST BE SUBMITTED UNDER THE MOLEX PART NUMBER TO IMDS (COMPANY ID#13255)

2. DESIGN - MATERIALS:
a. FOR BILL OF MATERIALS: SEE BOM CHART

3. DESIGN - GEOMETRY:
a. THE 3-D CAD DATA IS BASIC (WITHOUT TOLERANCE) AND MASTER FOR THIS PART WITH THE EXCEPTION OF UNDERLINED DIMENSIONS. DIMENSIONAL INFORMATION NOT SHOWN ON THIS DRAWING IS DEFINED BY THE DATA FILE AT ITS LATEST REVISION.
b. GEOMETRIC DIMENSIONS AND TOLERANCES PER ASME Y14.5M-2009
c. EDGES AND UNDIMENSIONED DETAILS PER ISO13715
d. CORNERS SHOWN AS SHARP TO BE R 0.2 MAX.
e. LETTERING SHALL BE 0.15 MAX RAISED IN 0.25 MAX RECESS PAD. THIS INCLUDES RECYCLING CODE, CAVITY ID, VENDOR IDENTIFICATION, AND CUSTOMER MATERIAL NUMBER.
f. VISUAL DEFECTS SHALL MEET COSMETIC STANDARD PS-45499-002 (Class B).
g. LASER MARKING:
1. PART NUMBER
2. DAY OF THE YEAR
3. SHIFT
4. YEAR
FOR ADDITIONAL INFORMATION SEE SECTION 5 UNDER PROCEDURES IN ES-34735-008.

BILL OF MATERIALS (BOM) (E3)

DESCRIPTION	DRAWING NO.
UL V0 VERSION	SD-160084-0002
STANDARD 2X2	334820402
STANDARD 2X3	334820602
STANDARD 2X4	334820802
STANDARD 2X6	334821202
STANDARD 2X8	334821602
STANDARD 2X10	334822002

MATING CONNECTOR DRAWINGS

DESCRIPTION	MOLEX INLINE
2X2	SD-33472-0001
2X3	SD-33472-0001
2X4	SD-33472-0001
2X6	SD-33472-0001
2X8	SD-33472-0001
2X10	SD-33472-0001

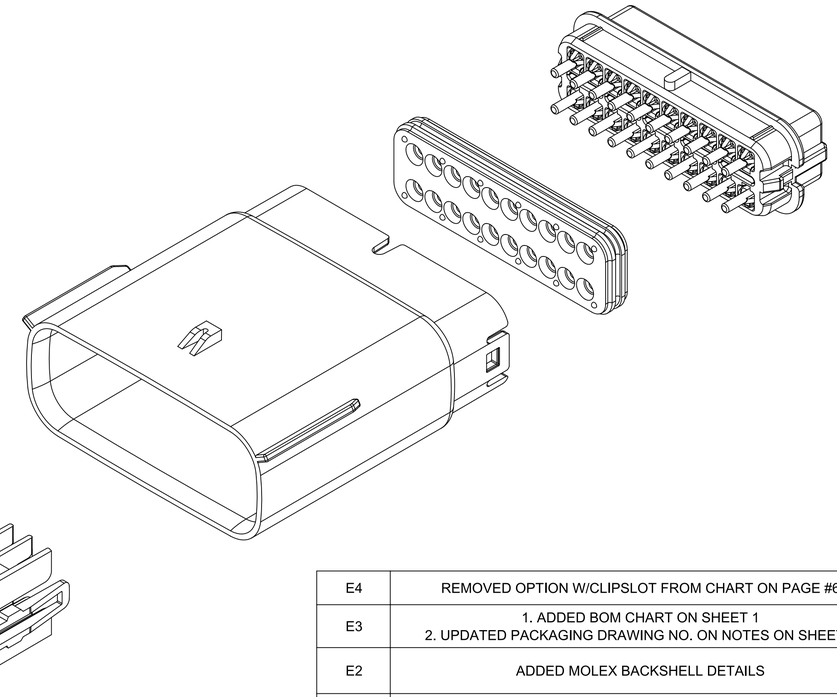

INSPECTION NUMBER LOG
LAST NUMBER: 9
ADDED:
REMOVED:

REV	REV DESCRIPTION
E4	REMOVED OPTION W/CLIPSLOT FROM CHART ON PAGE #6
E3	1. ADDED BOM CHART ON SHEET 1 2. UPDATED PACKAGING DRAWING NO. ON NOTES ON SHEET 1
E2	ADDED MOLEX BACKSHELL DETAILS
E1	MIGRATED FROM COCREATE AND IMPORTED DXF FILES
E	ADDED CHARTED DIMENSIONS FOR 2X2, 2X4, 2X6 AND 2X8 WITH CLIPSLOT
D	MINOR GEOMETRY CHANGE FOR UL V0
C3	ADD 2X4
C2	ADD 2X3
C1	ADD UL V0 CONFIGURATIONS
C	ADD 2X8
B1	ADD 2X6 BACKSHELL INFO
B	ADD 2X6
A	INITIAL RELEASE

THIS DRAWING CONTAINS INFORMATION THAT IS PROPRIETARY TO MOLEX ELECTRONIC TECHNOLOGIES, LLC AND SHOULD NOT BE USED WITHOUT WRITTEN PERMISSION

FUNCTIONAL SYMBOLS
FA = 0
FC = 0
FP = 0
DIVISIONAL SYMBOLS

DIMENSION UNITS	SCALE
MM	1.5:1

GENERAL TOLERANCES (UNLESS SPECIFIED)

ANGULAR TOL	± 1°
4 PLACES	±
3 PLACES	±
2 PLACES	± 0.100
1 PLACE	± 0.20
0 PLACES	±

DRAFT WHERE APPLICABLE MUST REMAIN WITHIN DIMENSIONS

CURRENT REV DESC: REMOVED OPTIONS WITH CLIPSLOT DUE THIS CONNECTOR DOES NOT HAVE CLIPSLOT

STATUS: Production
DRWN: MAURICIO RUIZ 2026-04-28
CHK'D: FERNANDO DEBERNARDI 2026-05-05
APPR: Michael Ho 2026-05-12

molex

MX150 BLADE
DUAL ROW SEALED ASSEMBLY

PRODUCT CUSTOMER DRAWING

DOCUMENT NUMBER	DOC TYPE	DOC PART	REVISION
SD-33482-0001	PSD	001	E4

THIRD ANGLE PROJECTION	DRAWING	SERIES	MATERIAL NUMBER	CUSTOMER	SHEET NUMBER
	A1-SIZE	33482		GENERAL MARKET	1 OF 11

Downloaded from Arrow.com.

SHEET DESCRIPTION
CONFIGURATIONS

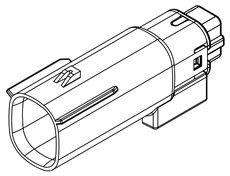

2X2 - STANDARD (STD)

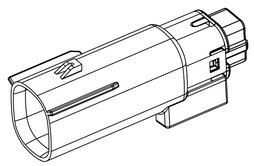

2X2 - UL V0*

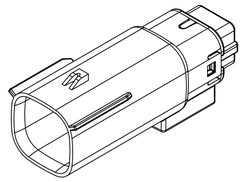

2X3 - STANDARD (STD)

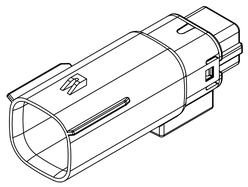

2X3 - LENGTHENED

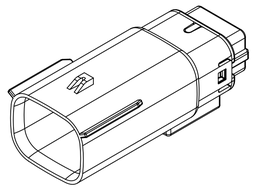

2X4 - STANDARD (STD)

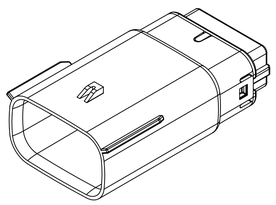

2X6 - STANDARD (STD)

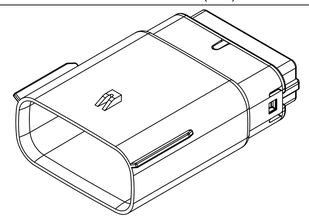

2X8 - STANDARD (STD)

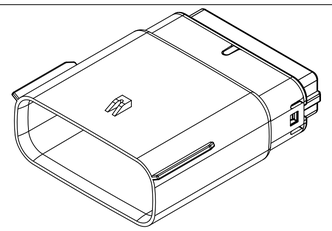

2X10 - STANDARD (STD)

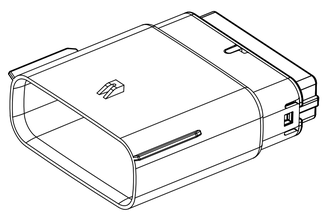

2X10 - UL V0*

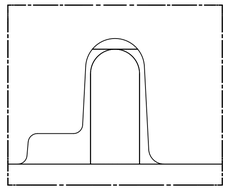

UL V0 UNIQUE FEATURE
Partial1
SCALE 10:1

* MINOR GEOMETRY CHANGE THAN STANDARD CONFIGURATION.
SEE NOTE 2a FOR MORE INFORMATION

THIS DRAWING CONTAINS INFORMATION THAT IS PROPRIETARY TO MOLEX ELECTRONIC TECHNOLOGIES, LLC AND SHOULD NOT BE USED WITHOUT WRITTEN PERMISSION

FUNCTIONAL SYMBOLS
FA = 0
FF = 0
FP = 0

DIVISIONAL SYMBOLS

DIMENSION UNITS	SCALE
MM	1.5:1

GENERAL TOLERANCES (UNLESS SPECIFIED)

ANGULAR TOL	± 1°
4 PLACES	±
3 PLACES	±
2 PLACES	± 0.100
1 PLACE	± 0.20
0 PLACES	±

DRAFT WHERE APPLICABLE MUST REMAIN WITHIN DIMENSIONS

CURRENT REV DESC: REMOVED OPTIONS WITH CLIPSLOT DUE THIS CONNECTOR DOES NOT HAVE CLIPSLOT

STATUS: Production
DRWN: MAURICIO RUIZ 2026-04-28
CHK'D: FERNANDO DEBERNARDI 2026-05-05
APPR: Michael Ho 2026-05-12

THIRD ANGLE PROJECTION | DRAWING: A1-SIZE | SERIES: 33482

molex

MX150 BLADE
DUAL ROW SEALED ASSEMBLY

PRODUCT CUSTOMER DRAWING

DOCUMENT NUMBER	DOC TYPE	DOC PART	REVISION
SD-33482-0001	PSD	001	E4

MATERIAL NUMBER	CUSTOMER	SHEET NUMBER
	GENERAL MARKET	2 OF 11

Downloaded from Arrow.com.

SHEET DESCRIPTION
KEY CONFIGURATIONS

2X2

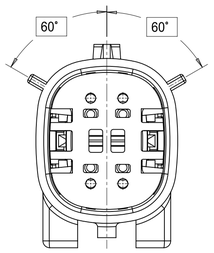

KEY A

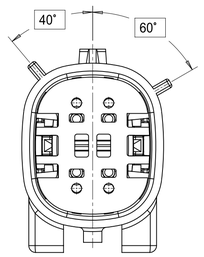

KEY B

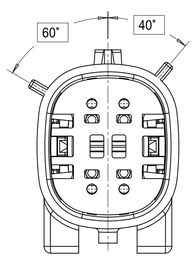

KEY C

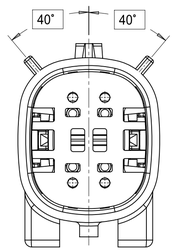

KEY D

2X3

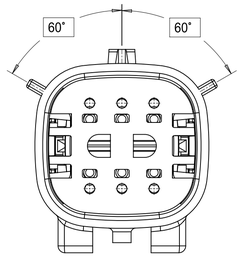

KEY A

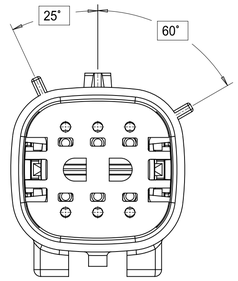

KEY B

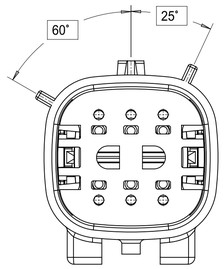

KEY C

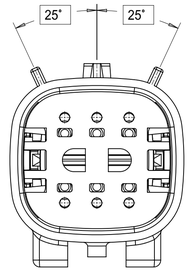

KEY D

2X4

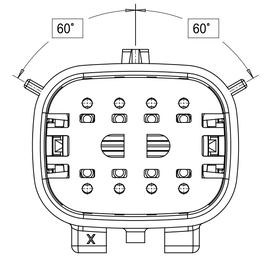

KEY A

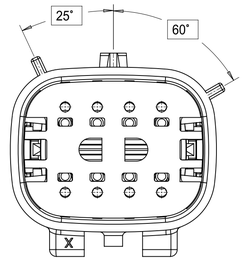

KEY B

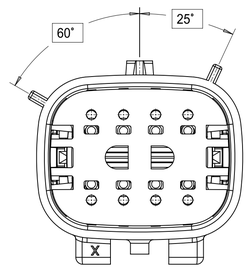

KEY C

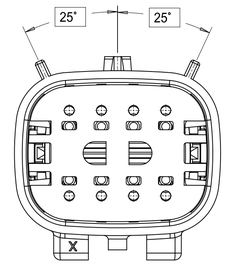

KEY D

FUNCTIONAL SYMBOLS
FA = 0
FC = 0
FP = 0

DIVISIONAL SYMBOLS

THIS DRAWING CONTAINS INFORMATION THAT IS PROPRIETARY TO MOLEX ELECTRONIC TECHNOLOGIES, LLC AND SHOULD NOT BE USED WITHOUT WRITTEN PERMISSION

DIMENSION UNITS	SCALE
MM	3:1

GENERAL TOLERANCES (UNLESS SPECIFIED)

ANGULAR TOL	± 1°
4 PLACES	±
3 PLACES	±
2 PLACES	± 0.100
1 PLACE	± 0.20
0 PLACES	±

DRAFT WHERE APPLICABLE MUST REMAIN WITHIN DIMENSIONS

CURRENT REV DESC: REMOVED OPTIONS WITH CLIPSLOT DUE THIS CONNECTOR DOES NOT HAVE CLIPSLOT

STATUS: Production
DRWN: MAURICIO RUIZ 2026-04-28
CHK'D: FERNANDO DEBERNARDI 2026-05-05
APPR: Michael Ho 2026-05-12

THIRD ANGLE PROJECTION | DRAWING: A1-SIZE | SERIES: 33482

molex

MX150 BLADE
DUAL ROW SEALED ASSEMBLY

PRODUCT CUSTOMER DRAWING

DOCUMENT NUMBER	DOC TYPE	DOC PART	REVISION
SD-33482-0001	PSD	001	E4

MATERIAL NUMBER	CUSTOMER	SHEET NUMBER
	GENERAL MARKET	3 OF 11

Product Information and Data Downloaded from Arrow.com.

SHEET DESCRIPTION
KEY CONFIGURATIONS CONT.

2X6

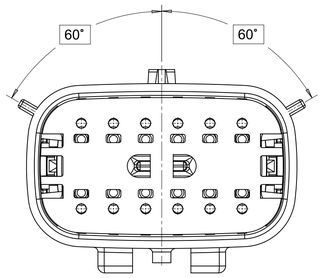

KEY A

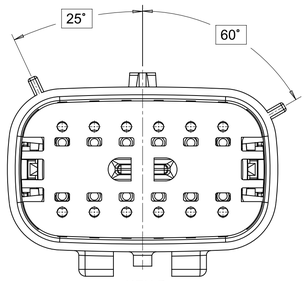

KEY B

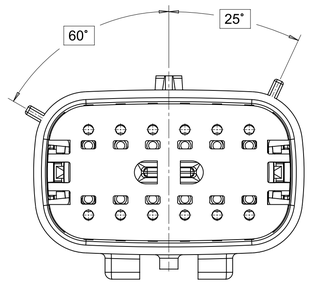

KEY C

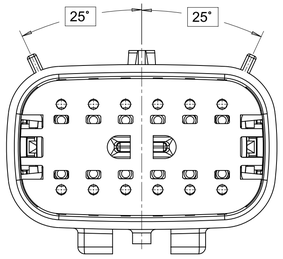

KEY D

2X8

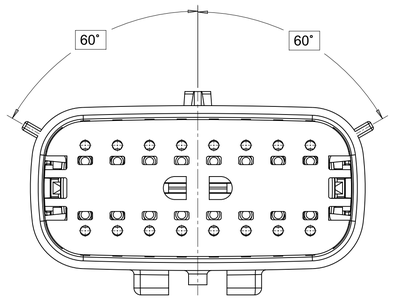

KEY A

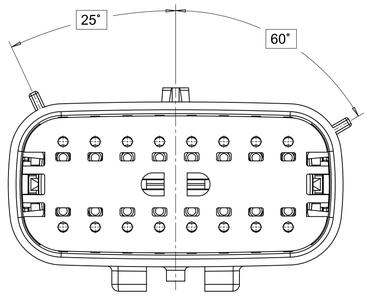

KEY B

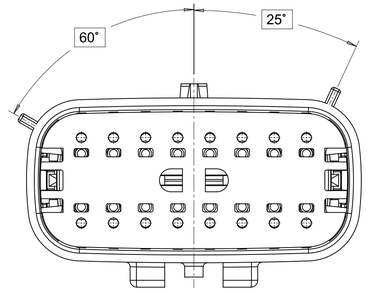

KEY C

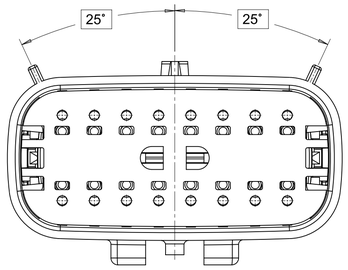

KEY D

2X10

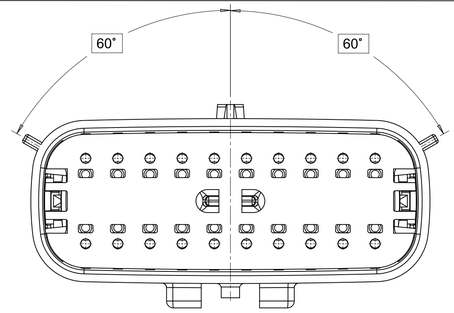

KEY A

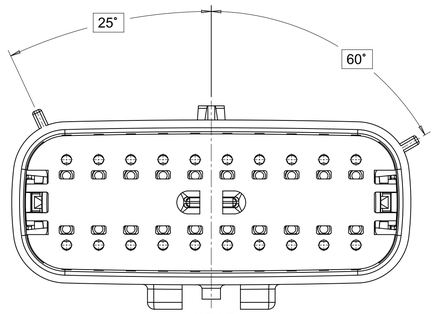

KEY B

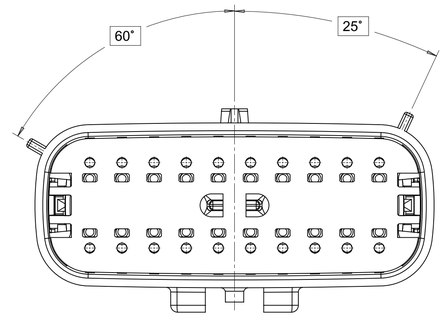

KEY C

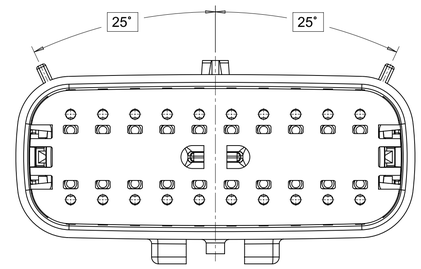

KEY D

THIS DRAWING CONTAINS INFORMATION THAT IS PROPRIETARY TO MOLEX ELECTRONIC TECHNOLOGIES, LLC AND SHOULD NOT BE USED WITHOUT WRITTEN PERMISSION

FUNCTIONAL SYMBOLS
FA = 0
FC = 0
FD = 0
DIVISIONAL SYMBOLS

DIMENSION UNITS	SCALE
MM	3:1

GENERAL TOLERANCES (UNLESS SPECIFIED)	
ANGULAR TOL	± 1°
4 PLACES	±
3 PLACES	±
2 PLACES	± 0.100
1 PLACE	± 0.20
0 PLACES	±

DRAFT WHERE APPLICABLE MUST REMAIN WITHIN DIMENSIONS

CURRENT REV DESC: REMOVED OPTIONS WITH CLIPSLOT DUE THIS CONNECTOR DOES NOT HAVE CLIPSLOT

STATUS: Production
DRWN: MAURICIO RUIZ 2026-04-28
CHK'D: FERNANDO DEBERNARDI 2026-05-05
APPR: Michael Ho 2026-05-12

THIRD ANGLE PROJECTION | DRAWING: A1-SIZE | SERIES: 33482

molex

MX150 BLADE
DUAL ROW SEALED ASSEMBLY

PRODUCT CUSTOMER DRAWING

DOCUMENT NUMBER	DOC TYPE	DOC PART	REVISION
SD-33482-0001	PSD	001	E4

MATERIAL NUMBER	CUSTOMER	SHEET NUMBER
	GENERAL MARKET	4 OF 11

Downloaded from Arrow.com.

SHEET DESCRIPTION
BLADE SEALED ASSEMBLY

CHARTED DIMENSION					
DESCRIPTION	DIMENSIONS				
	A	B	C	D	E
2X2	15.54	1.75	24.40	54.45	22.23
2X3 STANDARD	19.04	3.50	26.21	54.45	22.23
2X3 LENGTHENED	19.04	3.50	26.21	56.45	22.23
2X4	22.54	1.75	27.21	54.45	22.23
2X6	29.54	1.75	32.27	54.45	22.23
2X8	36.54	1.75	38.88	54.45	22.23
2X10	43.64	1.75	45.65	54.45	22.05

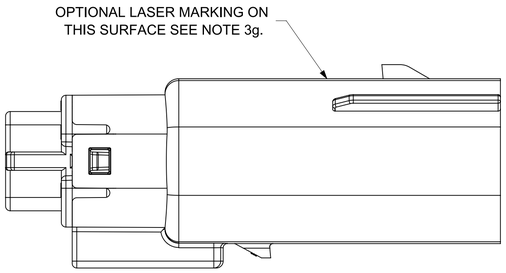

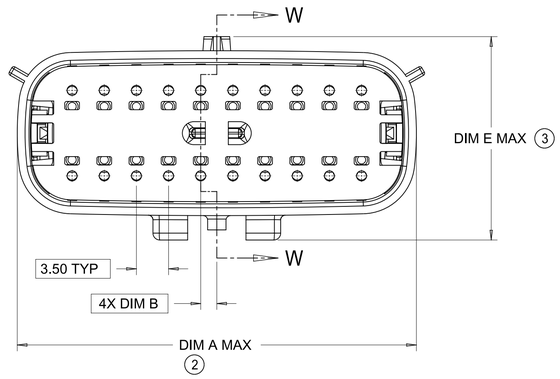

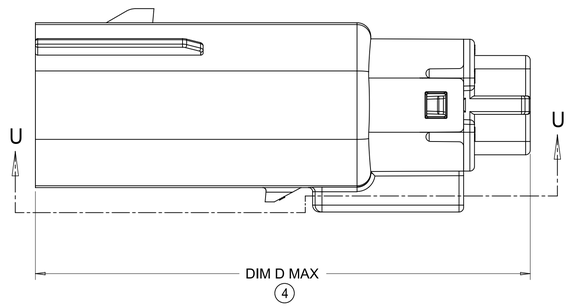

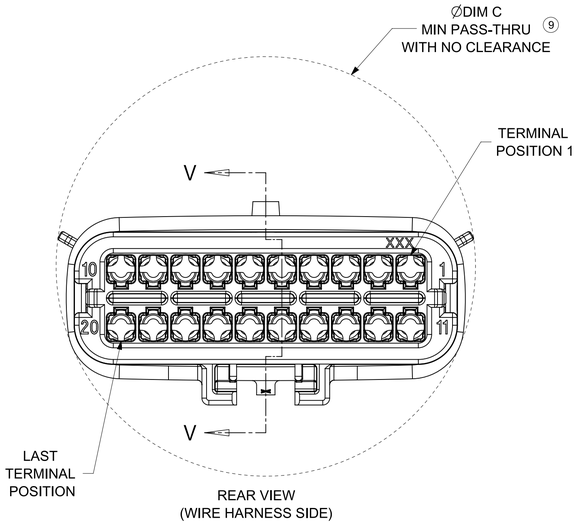

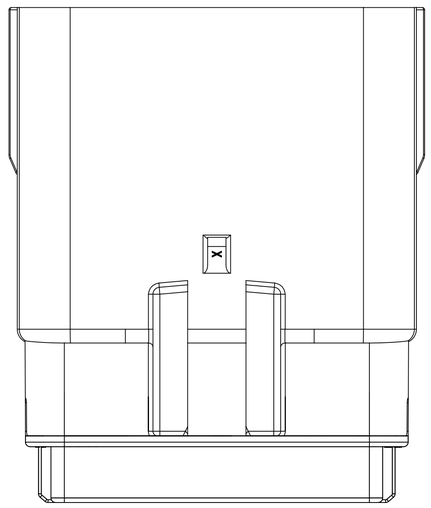

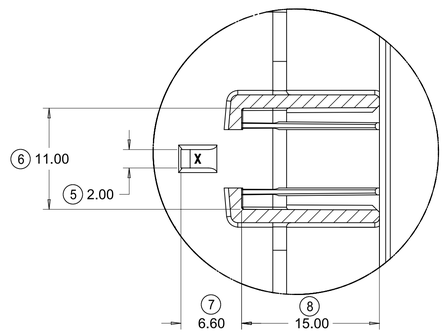

PartialU-U
SCALE 3:1

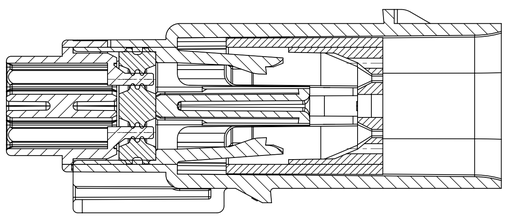

PRIMARY LOCK REINFORCEMENT (PLR) SHOWN
IN PRE-STAGED POSITION

SECTION W-W

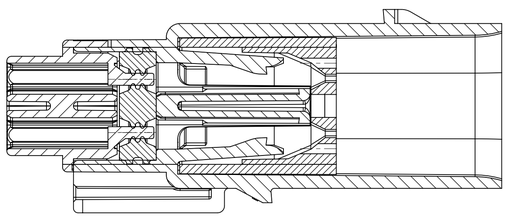

PRIMARY LOCK REINFORCEMENT (PLR) SHOWN
IN FINAL-LOCK POSITION

SECTION V-V

FUNCTIONAL SYMBOLS		THIS DRAWING CONTAINS INFORMATION THAT IS PROPRIETARY TO MOLEX ELECTRONIC TECHNOLOGIES, LLC AND SHOULD NOT BE USED WITHOUT WRITTEN PERMISSION			
FA = 0	DIMENSION UNITS: MM	SCALE: 3:1	CURRENT REV DESC: REMOVED OPTIONS WITH CLIPSLOT DUE THIS CONNECTOR DOES NOT HAVE CLIPSLOT	molex	
FC = 0	GENERAL TOLERANCES (UNLESS SPECIFIED)			MX150 BLADE DUAL ROW SEALED ASSEMBLY	
FD = 0	ANGULAR TOL ± 1°			PRODUCT CUSTOMER DRAWING	
DIVISIONAL SYMBOLS	4 PLACES ±		STATUS: Production		
	3 PLACES ±		DRWN: MAURICIO RUIZ 2026-04-28	DOCUMENT NUMBER: SD-33482-0001	DOC TYPE: PSD / DOC PART: 001 / REVISION: E4
	2 PLACES ± 0.100		CHK'D: FERNANDO DEBERNARDI 2026-05-05		
	1 PLACE ± 0.20		APPR: Michael Ho 2026-05-12		
	0 PLACES ±				
	DRAFT WHERE APPLICABLE MUST REMAIN WITHIN DIMENSIONS		THIRD ANGLE PROJECTION	DRAWING: A1-SIZE / SERIES: 33482	MATERIAL NUMBER / CUSTOMER: GENERAL MARKET / SHEET NUMBER: 5 OF 11

Downloaded from Arrow.com.

SHEET DESCRIPTION
SYSTEM PACKAGING

E4

CHARTED DIMENSION				
CKT	BLADE CONFIGURATION	RECEPTACLE CONFIGURATION	DIMENSIONS	
			K	L
2X2	STANDARD	W/ CLIPSLOT	72.78	28.50
		LENGTHENED	77.21	28.00
2X3	STANDARD	W/ CLIPSLOT	72.78	30.50
	LENGTHENED	W/ CLIPSLOT	74.79	30.50
2X4	STANDARD	W/ CLIPSLOT	72.78	31.50
2X6		W/ CLIPSLOT	72.79	35.58
2X8		W/ CLIPSLOT	72.67	42.25
2X10	STANDARD	STANDARD	72.78	49.05

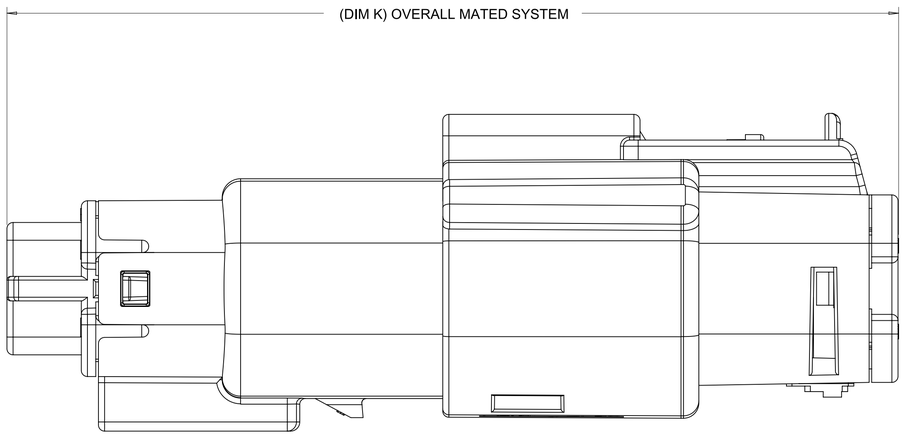

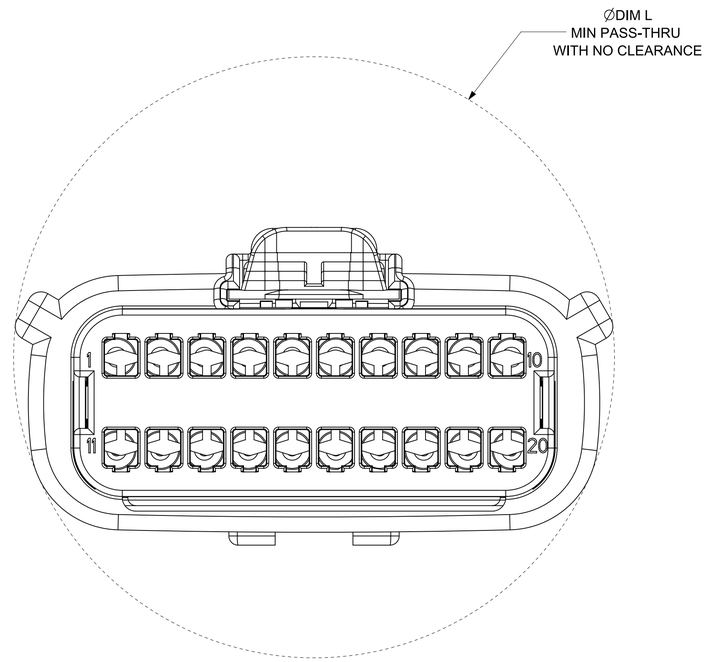

FUNCTIONAL SYMBOLS

FA = 0

FC = 0

FD = 0

DIVISIONAL SYMBOLS

THIS DRAWING CONTAINS INFORMATION THAT IS PROPRIETARY TO MOLEX ELECTRONIC TECHNOLOGIES, LLC AND SHOULD NOT BE USED WITHOUT WRITTEN PERMISSION

DIMENSION UNITS	SCALE
MM	4:1

GENERAL TOLERANCES (UNLESS SPECIFIED)

ANGULAR TOL	± 1°
4 PLACES	±
3 PLACES	±
2 PLACES	± 0.100
1 PLACE	± 0.20
0 PLACES	±

DRAFT WHERE APPLICABLE MUST REMAIN WITHIN DIMENSIONS

CURRENT REV DESC: REMOVED OPTIONS WITH CLIPSLOT DUE THIS CONNECTOR DOES NOT HAVE CLIPSLOT

STATUS: Production

DRWN:	MAURICIO RUIZ	2026-04-28
CHK'D:	FERNANDO DEBERNARDI	2026-05-05
APPR:	Michael Ho	2026-05-12

THIRD ANGLE PROJECTION

DRAWING	SERIES
A1-SIZE	33482

molex

MX150 BLADE
DUAL ROW SEALED ASSEMBLY

PRODUCT CUSTOMER DRAWING

DOCUMENT NUMBER	DOC TYPE	DOC PART	REVISION
SD-33482-0001	PSD	001	E4

MATERIAL NUMBER	CUSTOMER	SHEET NUMBER
	GENERAL MARKET	6 OF 11

Downloaded from Arrow.com.

SHEET DESCRIPTION
BACKSHELL NOTES

BACKSHELL NOTES: VALID UNLESS OTHERWISE SPECIFIED

1. GENERAL:
a. APPLICATION SPECIFICATION SEE: AS-34951-001
-DESIGNED TO MATE WITH BLADE SEALED ASSEMBLY
SPECIFIED IN MOLEX DRAWING SD-33482-0001.
-SYSTEM TO BE USED WITH WIRE WITHIN DIAMETER RANGE OF 1.2mm TO 2.69mm.
-COMPONENTS ARE OPTIONAL AND MUST BE PURCHASED SEPERATELY.
-DESIGN IS OWNED BY SCHLEMMER FOR SCHLEMMER BACKSHELL.
-DESIGN IS OWNED BY MOLEX FOR MOLEX BACKSHELL.
-90˚ ADAPTOR DESIGN IS OWNED BY MOLEX.
-FOR ADDITIONAL INFORMATION SEE THE BACKSHELL COMPONENT DRAWING SD-34950-0001.

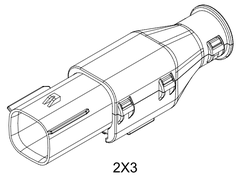

2X3

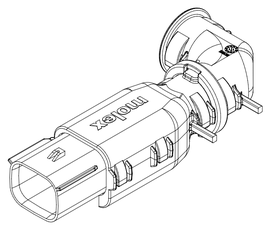

2X4

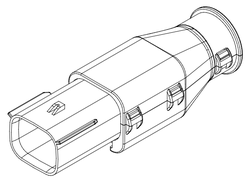

2X4

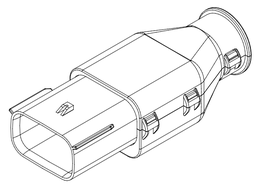

2X6

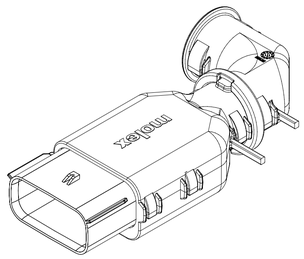

2X8

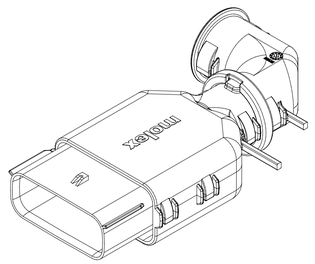

2X10

BACKSHELL CUSTOMER
MODEL NUMBER LEGEND

34950-XXXX

CUSTOMER MODEL COMPONENTS
- 0 - SCHLEMMER BACKSHELL ONLY
- 1 - SCHLEMMER BACKSHELL & MX150 HOUSING KEY A ASSEMBLY
- 2 - SCHLEMMER BACKSHELL & MX150 HOUSING KEY B ASSEMBLY
- 3 - SCHLEMMER BACKSHELL & MX150 HOUSING KEY C ASSEMBLY
- 4 - SCHLEMMER BACKSHELL & MX150 HOUSING KEY D ASSEMBLY
- 5 - MOLEX BACKSHELL ONLY
- 6 - MOLEX BACKSHELL & MX150 HOUSING KEY A ASSEMBLY
- 7 - MOLEX BACKSHELL & MX150 HOUSING KEY B ASSEMBLY
- 8 - MOLEX BACKSHELL & MX150 HOUSING KEY C ASSEMBLY
- 9 - MOLEX BACKSHELL & MX150 HOUSING KEY D ASSEMBLY

BACKSHELL FEATURES
- 1 - WITH RIBS
- 2 - WITHOUT RIBS
- 3 - 90˚ ADAPTOR

MX150 CIRCUIT SIZE 04, 06, 08, 12, 16, 20

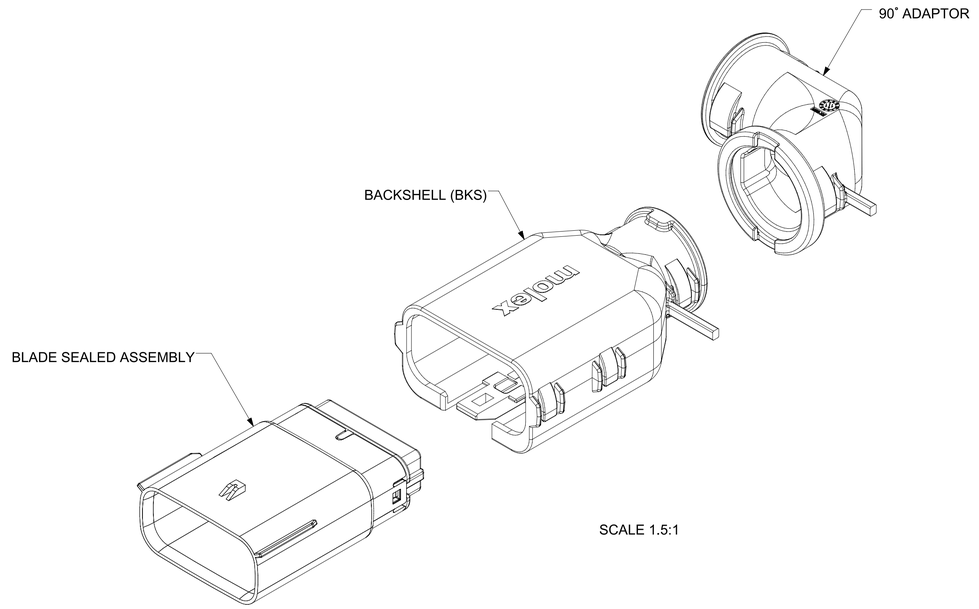

SCALE 1.5:1

THIS DRAWING CONTAINS INFORMATION THAT IS PROPRIETARY TO MOLEX ELECTRONIC TECHNOLOGIES, LLC AND SHOULD NOT BE USED WITHOUT WRITTEN PERMISSION

FUNCTIONAL SYMBOLS		DIMENSION UNITS	SCALE
FA	= 0	MM	1.5:1
FC	= 0	GENERAL TOLERANCES (UNLESS SPECIFIED)	
FP	= 0	ANGULAR TOL	± 1˚
DIVISIONAL SYMBOLS		4 PLACES	±
		3 PLACES	±
		2 PLACES	± 0.100
		1 PLACE	± 0.20
		0 PLACES	±
		DRAFT WHERE APPLICABLE MUST REMAIN WITHIN DIMENSIONS	

CURRENT REV DESC: REMOVED OPTIONS WITH CLIPSLOT DUE THIS CONNECTOR DOES NOT HAVE CLIPSLOT

STATUS: Production
DRWN: MAURICIO RUIZ 2026-04-28
CHK'D: FERNANDO DEBERNARDI 2026-05-05
APPR: Michael Ho 2026-05-12

THIRD ANGLE PROJECTION | DRAWING: A1-SIZE | SERIES: 33482 | MATERIAL NUMBER | CUSTOMER: GENERAL MARKET | SHEET NUMBER: 7 OF 11

molex

MX150 BLADE
DUAL ROW SEALED ASSEMBLY

PRODUCT CUSTOMER DRAWING

DOCUMENT NUMBER	DOC TYPE	DOC PART	REVISION
SD-33482-0001	PSD	001	E4

Downloaded from Arrow.com.

SHEET DESCRIPTION
SCHLEMMER BACKSHELL

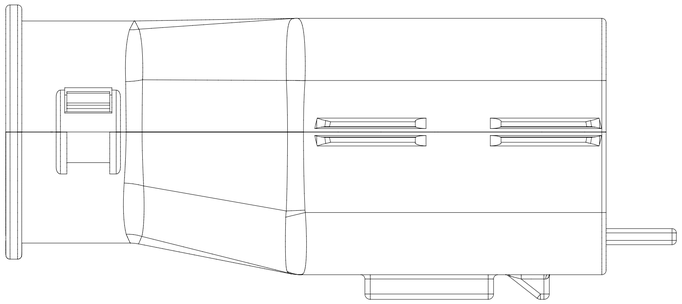

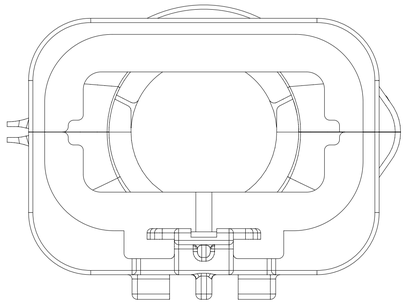

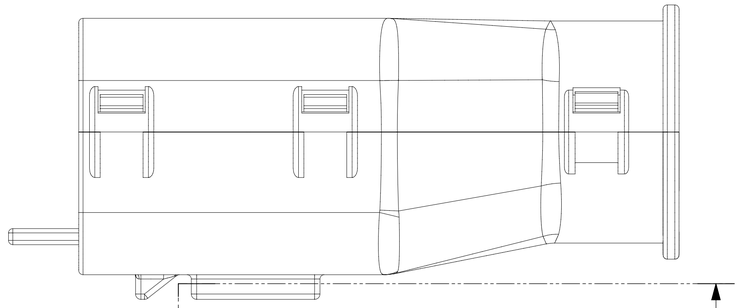

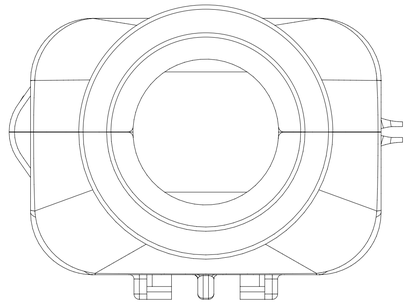

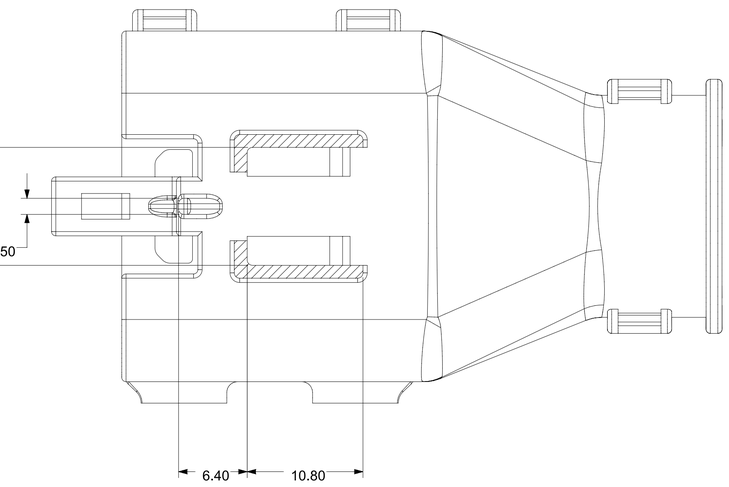

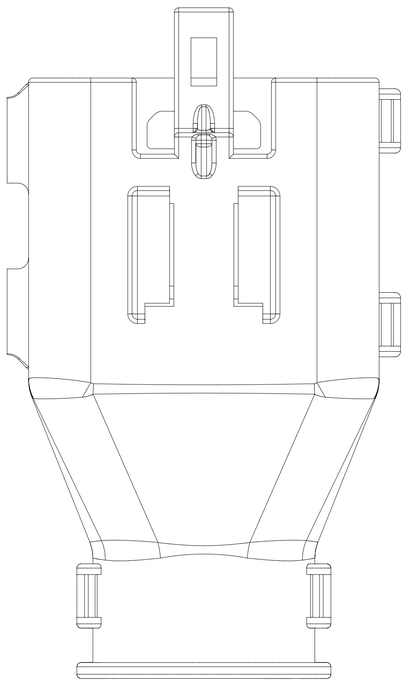

SECTION A-A

FUNCTIONAL SYMBOLS		THIS DRAWING CONTAINS INFORMATION THAT IS PROPRIETARY TO MOLEX ELECTRONIC TECHNOLOGIES, LLC AND SHOULD NOT BE USED WITHOUT WRITTEN PERMISSION			
FA =	0	DIMENSION UNITS: MM	SCALE: 3.5:1	CURRENT REV DESC: REMOVED OPTIONS WITH CLIPSLOT DUE THIS CONNECTOR DOES NOT HAVE CLIPSLOT	molex
FC =	0	GENERAL TOLERANCES (UNLESS SPECIFIED)			MX150 BLADE DUAL ROW SEALED ASSEMBLY
FD =	0	ANGULAR TOL ± 1°			PRODUCT CUSTOMER DRAWING
DIVISIONAL SYMBOLS		4 PLACES ±		STATUS: Production	DOCUMENT NUMBER: SD-33482-0001 / DOC TYPE: PSD / DOC PART: 001 / REVISION: E4
		3 PLACES ±		DRWN: MAURICIO RUIZ 2026-04-28	
		2 PLACES ± 0.100		CHK'D: FERNANDO DEBERNARDI 2026-05-05	
		1 PLACE ± 0.20		APPR: Michael Ho 2026-05-12	
		0 PLACES ±		THIRD ANGLE PROJECTION / DRAWING: A1-SIZE / SERIES: 33482	MATERIAL NUMBER / CUSTOMER: GENERAL MARKET / SHEET NUMBER: 8 OF 11
		DRAFT WHERE APPLICABLE MUST REMAIN WITHIN DIMENSIONS			

Downloaded from Arrow.com.

SHEET DESCRIPTION
MOLEX BACKSHELL

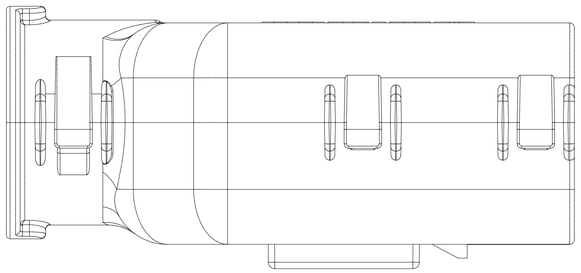

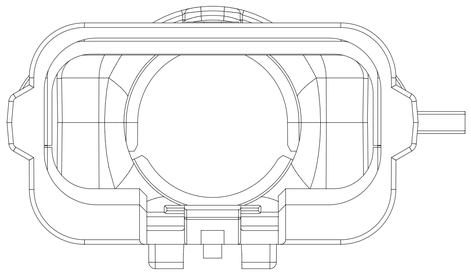

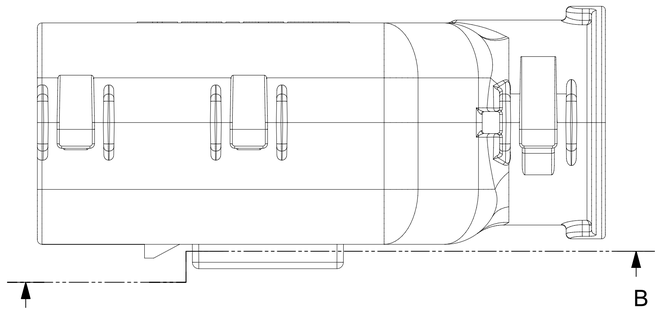

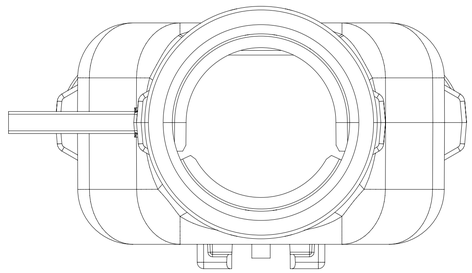

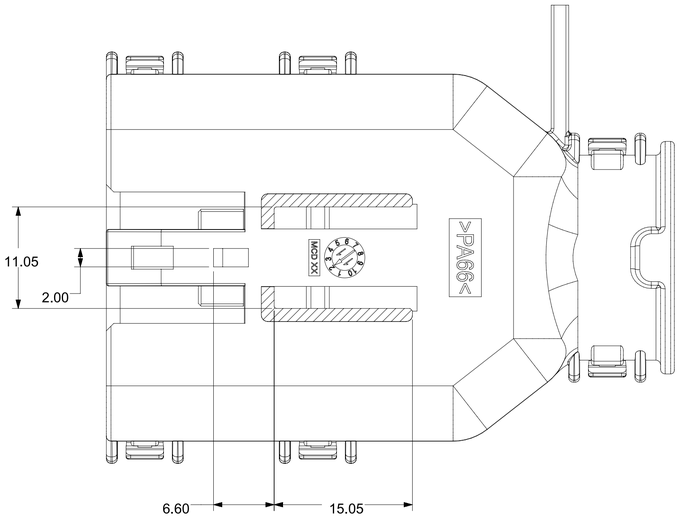

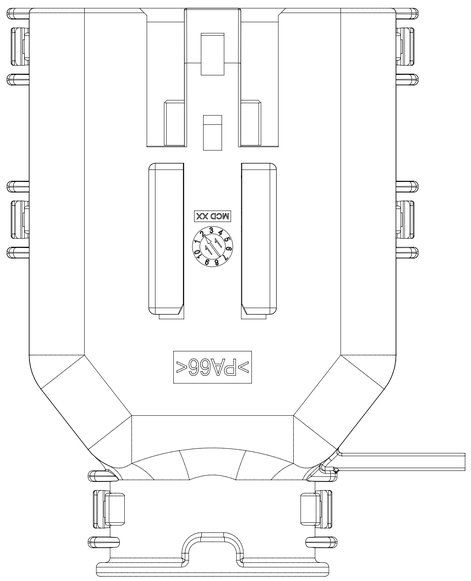

SECTION B-B

FUNCTIONAL SYMBOLS	THIS DRAWING CONTAINS INFORMATION THAT IS PROPRIETARY TO MOLEX ELECTRONIC TECHNOLOGIES, LLC AND SHOULD NOT BE USED WITHOUT WRITTEN PERMISSION			
FA = 0	DIMENSION UNITS: MM	SCALE: 3:1	CURRENT REV DESC: REMOVED OPTIONS WITH CLIPSLOT DUE THIS CONNECTOR DOES NOT HAVE CLIPSLOT	molex
FC = 0	GENERAL TOLERANCES (UNLESS SPECIFIED)			MX150 BLADE DUAL ROW SEALED ASSEMBLY
FP = 0	ANGULAR TOL ± 1°			PRODUCT CUSTOMER DRAWING
DIVISIONAL SYMBOLS	4 PLACES ±		STATUS: Production	DOCUMENT NUMBER: SD-33482-0001 / DOC TYPE: PSD / DOC PART: 001 / REVISION: E4
	3 PLACES ±		DRWN: MAURICIO RUIZ 2026-04-28	
	2 PLACES ± 0.100		CHK'D: FERNANDO DEBERNARDI 2026-05-05	
	1 PLACE ± 0.20		APPR: Michael Ho 2026-05-12	
	0 PLACES ±		THIRD ANGLE PROJECTION / DRAWING: A1-SIZE / SERIES: 33482	MATERIAL NUMBER / CUSTOMER: GENERAL MARKET / SHEET NUMBER: 9 OF 11
	DRAFT WHERE APPLICABLE MUST REMAIN WITHIN DIMENSIONS			

Downloaded from Arrow.com.

SHEET DESCRIPTION
SCHLEMMER BACKSHELL CONFIGURATIONS

CHARTED DIMENSIONS

CKT	BLADE CONFIGURATION	RECEPTACLE CONFIGURATION	DIMENSIONS				
			M	N	P	R	T
2X3	STANDARD	STANDARD	106.83	32.75	31.75	29.00	29.50
	LENGTHENED		108.71				
2X4	STANDARD	STANDARD	106.83	33.50	31.90	30.70	30.70
2X6	STANDARD	STANDARD	106.83	37.84	37.27	35.83	36.83

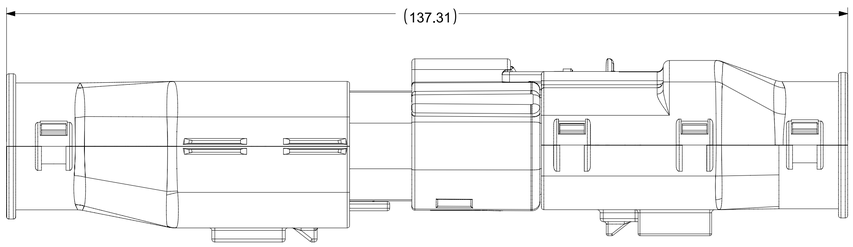

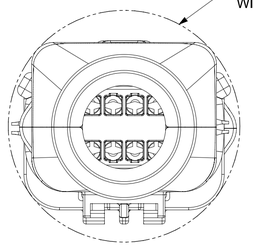

OVERALL MATED SYSTEM WITH BLADE AND RECEPTACLE BACKSHELL

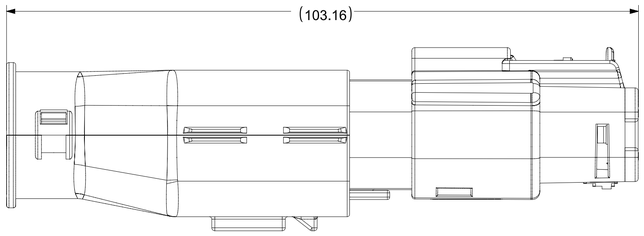

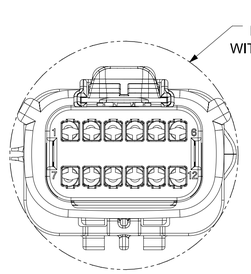

OVERALL MATED SYSTEM WITH BLADE BACKSHELL

OVERALL MATED SYSTEM WITH RECEPTACLE BACKSHELL

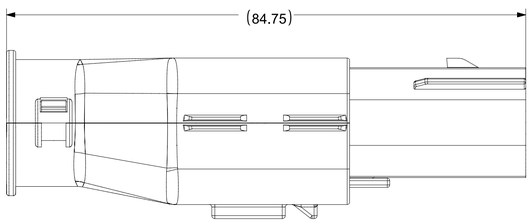

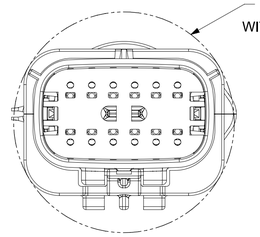

BLADE SEALED ASSEMBLY WITH BLADE BACKSHELL

THIS DRAWING CONTAINS INFORMATION THAT IS PROPRIETARY TO MOLEX ELECTRONIC TECHNOLOGIES, LLC AND SHOULD NOT BE USED WITHOUT WRITTEN PERMISSION

FUNCTIONAL SYMBOLS
FA = 0
FC = 0
FD = 0
DIVISIONAL SYMBOLS

DIMENSION UNITS	SCALE
MM	2:1

GENERAL TOLERANCES (UNLESS SPECIFIED)

ANGULAR TOL	± 1°
4 PLACES	±
3 PLACES	±
2 PLACES	± 0.100
1 PLACE	± 0.20
0 PLACES	±

DRAFT WHERE APPLICABLE MUST REMAIN WITHIN DIMENSIONS

CURRENT REV DESC: REMOVED OPTIONS WITH CLIPSLOT DUE THIS CONNECTOR DOES NOT HAVE CLIPSLOT

STATUS: Production
DRWN: MAURICIO RUIZ 2026-04-28
CHK'D: FERNANDO DEBERNARDI 2026-05-05
APPR: Michael Ho 2026-05-12

THIRD ANGLE PROJECTION | DRAWING: A1-SIZE | SERIES: 33482

molex

MX150 BLADE
DUAL ROW SEALED ASSEMBLY

PRODUCT CUSTOMER DRAWING

DOCUMENT NUMBER	DOC TYPE	DOC PART	REVISION
SD-33482-0001	PSD	001	E4

MATERIAL NUMBER	CUSTOMER	SHEET NUMBER
	GENERAL MARKET	10 OF 11

Downloaded from Arrow.com.

SHEET DESCRIPTION
MOLEX BACKSHELL CONFIGURATIONS

CHARTED DIMENSIONS

CKT	BLADE CONFIGURATION	RECEPTACLE CONFIGURATION	DIMENSIONS									
			U	V	W	X	Y	AA	AB	AC	AD	AE
2X4	STANDARD	STANDARD	115.24	94.36	93.93	75.62	32.10	32.93	32.54	32.85	31.76	56.81
2X8	STANDARD	STANDARD	132.49	102.81	102.73	84.07	36.10	45.44	45.44	42.65	45.44	68.18
2X10	STANDARD	STANDARD	132.49	102.81	102.73	84.07	36.10	45.44	45.44	42.65	45.44	68.18

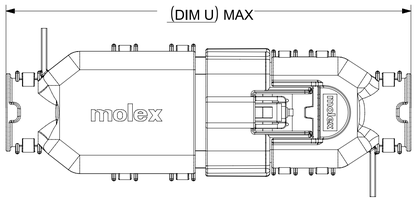

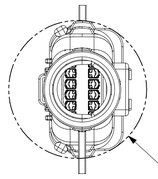

OVERALL MATED SYSTEM WITH BLADE AND RECEPTACLE BACKSHELL

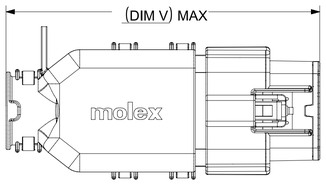

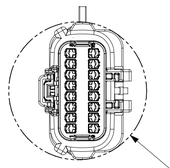

OVERALL MATED SYSTEM WITH BLADE BACKSHELL

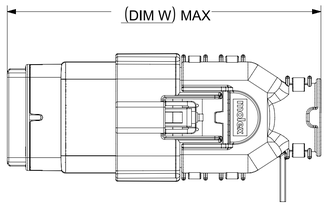

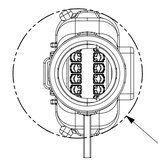

OVERALL MATED SYSTEM WITH RECEPTACLE BACKSHELL

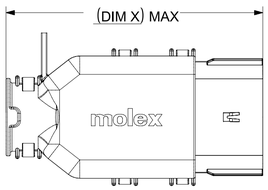

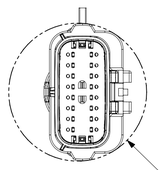

BLADE SEALED ASSEMBLY WITH BLADE BACKSHELL

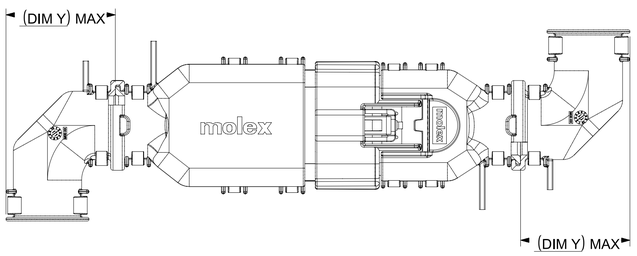

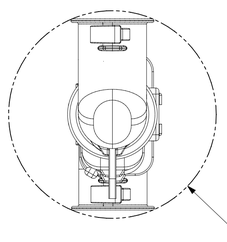

ADD THE VALUE OF 'Y' TO THE TOTAL DIMENSION
WHENEVER ADAPTOR IS USED

THIS DRAWING CONTAINS INFORMATION THAT IS PROPRIETARY TO MOLEX ELECTRONIC TECHNOLOGIES, LLC AND SHOULD NOT BE USED WITHOUT WRITTEN PERMISSION

FUNCTIONAL SYMBOLS
FA = 0
FC = 0
FP = 0
DIVISIONAL SYMBOLS

DIMENSION UNITS	SCALE
MM	1:1

GENERAL TOLERANCES (UNLESS SPECIFIED)

ANGULAR TOL	± 1°
4 PLACES	±
3 PLACES	±
2 PLACES	± 0.100
1 PLACE	± 0.20
0 PLACES	±

DRAFT WHERE APPLICABLE MUST REMAIN WITHIN DIMENSIONS

CURRENT REV DESC: REMOVED OPTIONS WITH CLIPSLOT DUE THIS CONNECTOR DOES NOT HAVE CLIPSLOT

STATUS: Production
DRWN: MAURICIO RUIZ 2026-04-28
CHK'D: FERNANDO DEBERNARDI 2026-05-05
APPR: Michael Ho 2026-05-12

THIRD ANGLE PROJECTION | DRAWING: A1-SIZE | SERIES: 33482

molex

MX150 BLADE
DUAL ROW SEALED ASSEMBLY

PRODUCT CUSTOMER DRAWING

DOCUMENT NUMBER	DOC TYPE	DOC PART	REVISION
SD-33482-0001	PSD	001	E4

MATERIAL NUMBER	CUSTOMER	SHEET NUMBER
	GENERAL MARKET	11 OF 11

Downloaded from Arrow.com.