Data Sheet | Item Number: 215-511

Banana plug; for socket 4 mm Ø; 2,50 mm²; yellow

https://www.wago.com/215-511

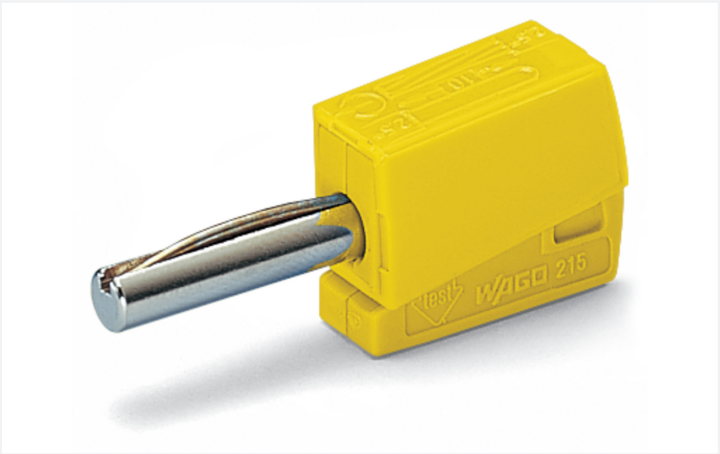

Color: yellow

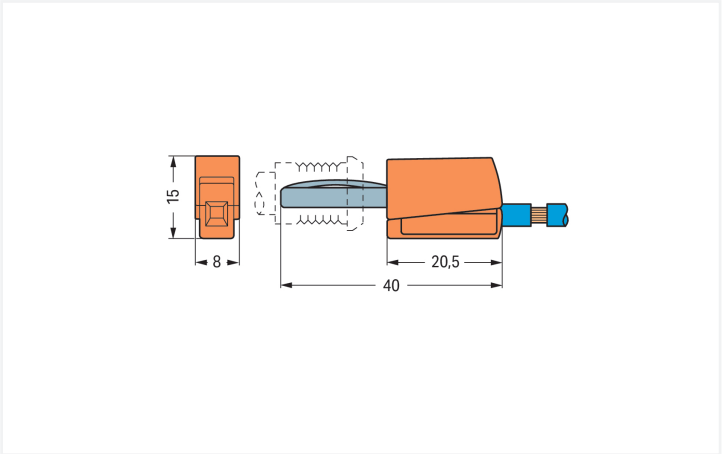

Dimensions in mm

Technical data

Total number of potentials	1

Electrical data

Rated current	20 A
Test voltage	42 V

Connection Data

Connection technology	CAGE CLAMP®
Strip length	9 … 11 mm / 0.35 … 0.43 inches
Clamping units	1
Solid conductor	0.08 … 2.5 mm² / 28 … 14 AWG
Fine-stranded conductor	0.08 … 2.5 mm² / 28 … 14 AWG

Physical data

Width	8 mm / 0.315 inches
Height	15 mm / 0.591 inches
Depth	40 mm / 1.575 inches

Material data

Color	yellow
Fire load	0.037 MJ
Weight	3.8 g

Downloaded from Arrow.com.

Commercial data

Product Group	2 (Terminal Block Accessories)
PU (SPU)	50 pcs
Packaging type	Box
Country of origin	DE
GTIN	4045454293512
Customs tariff number	85366990990

Product Classification

UNSPSC	39121421
eCl@ss 10.0	27-44-03-13
eCl@ss 9.0	27-44-03-13
ETIM 9.0	EC002255
ETIM 10.0	EC002255
ECCN	NO US CLASSIFICATION

Environmental Product Compliance

RoHS Compliance Status	Compliant,No Exemption

Downloads

Environmental Product Compliance

Compliance Search

Environmental Product Compliance 215-511

Documentation

Bid Text

215-511	19.02.2019	xml 3.02 KB	
215-511	19.09.2017	doc 24.50 KB	

CAD/CAE-Data

CAD data

2D/3D Models 215-511

CAE data

EPLAN Data Portal 215-511

WSCAD Universe 215-511

Downloaded from Arrow.com.

Installation Notes

Conductor termination

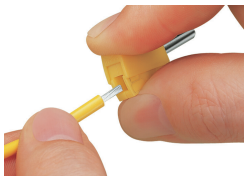

Conductor termination: Press button fully, insert stripped conductor into square entry and release.

Testing

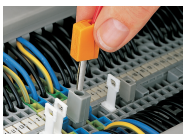

Testing via banana plug.
Picture shows a test plug adapter (Item No. 209-170).

Downloaded from Arrow.com.