THIS DRAWING IS UNPUBLISHED. RELEASED FOR PUBLICATION -,- .
© COPYRIGHT - BY TYCO ELECTRONICS CORPORATION. ALL RIGHTS RESERVED.

LOC	DIST
CM	00

REVISIONS

P	LTR	DESCRIPTION	DATE	DWN	APVD
	B	REVISED PER ECO-10-016416	24AUG10	DH	DY

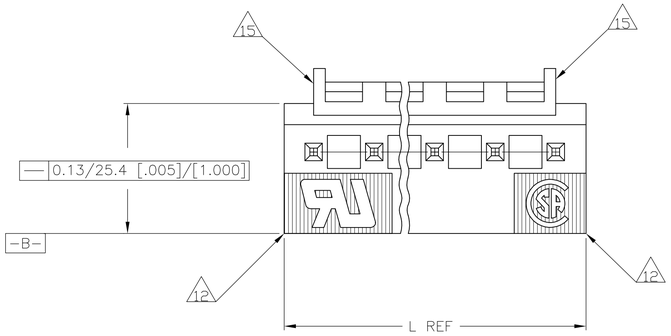

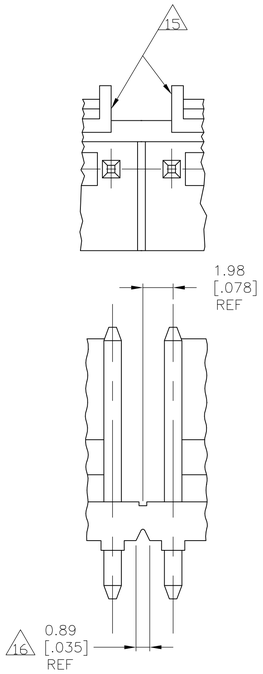

INTERRUPTED WALL FOR POSITION SIZES 6 AND ABOVE 14

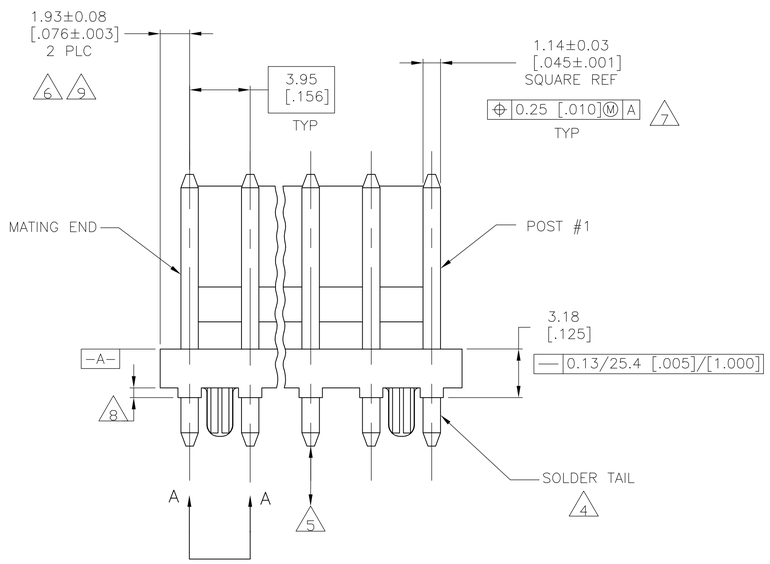

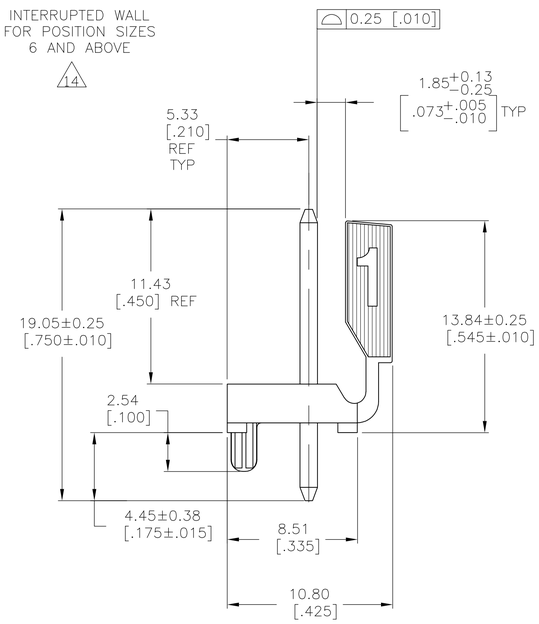

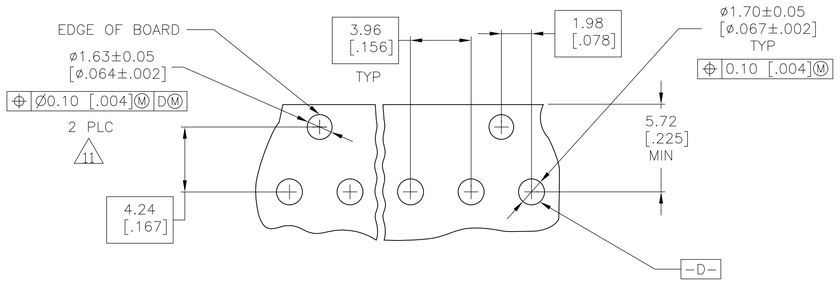

RECOMMENDED MOUNTING HOLE PATTERN FOR 1.57[.062] THICK P.C. BOARD 10

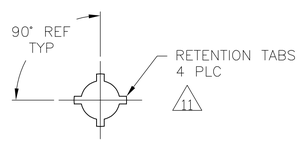

VIEW A-A
SCALE 10:1

1 MATERIAL

HOUSING: THERMOPLASTIC POLYESTER,GLASS FILLED,UL94V-O.
POST: COPPER ALLOY

2 —

4 POST SOLDERTAILS COMPLY WITH AMP SOLDERABILITY SPEC 109-11-2.

5 POST WITHSTANDS 13.34N (3 LB) MIN AXIAL FORCE IN EITHER DIRECTION WITHOUT DISLODGING.

6 APPLIES AT -A- .

7 APPLIES WHEN THE HEADER IS STRAIGHT.

8 PLASTIC PROJECTIONS PERMITTED IN THIS ZONE.

9 COORDINATE DIMENSIONS APPLIES FROM THE CENTER OF THE ACTUAL FEATURE.

10 SOLDER SIDE OF BOARD IS SHOWN.

11 THE RENTENTION TABS PROVIDE A ONE-TIME INTERFERENCE FIT IN THE 1.63[.064] DIAMETER BOARD HOLE FOR HEADER ASSEMBLY RETENTION DURING SOLDERING. FOUR TABS PER PEG, TWO PEGS PER HEADER ASSEMBLY (ONE PEG ONLY FOR 2 POSITION SIZE).

12 UL MARKING MAY NOT APPEAR ON THE 2 OR 3 POSITION SIZES. CSA MARKING IS OPTIONAL ON THE 2 POSITION SIZE.

13. DIMENSIONS IN BRACKETS ARE IN INCHES.

14 ALL POSITION SIZES HAVE THE BACKWALL NOTCHED ON BOTH ENDS AS SHOWN. THE 2 THRU 5 POSITION SIZES HAVE SOLID BACKWALLS. POSITION SIZES 6 AND ABOVE HAVE AN INTERRUPTED BACKWALL AT VARIOUS LOCATIONS (SEE TABLE FOR INTERRUPTION(S) LOCATIONS).

15 EDGE OF POLARIZING LOCK WALL TO BE IN LINE WITH CENTERLINE OF ADJACENT POST WITHIN ±0.13 [.005].

16 NOTCH SHOWN MAY OR MAY NOT APPEAR.

17 FINISH
HOUSING: NATURAL
POST: MATTE TIN PLATE, .000150" MIN THICK OVER NICKEL.

17	NONE	7.80 [.307]	2	1744384-2
FINISH	BACKWALL INTERUPTION(S) BETWEEN POST	L	NO. OF CIRCUITS	PART NUMBER

THIS DRAWING IS A CONTROLLED DOCUMENT.

DIMENSIONS: mm [INCHES]

TOLERANCES UNLESS OTHERWISE SPECIFIED:
0 PLC ± -
1 PLC ± -
2 PLC ± -
3 PLC ± -
4 PLC ± -
ANGLES ± -

MATERIAL 1
FINISH 2 17

METRIC

DWN D. HUMBERT 18JUNE2010
CHK D. YI 18JUNE2010
APVD D. YI 18JUNE2010
PRODUCT SPEC —
APPLICATION SPEC —
WEIGHT —

Tyco Electronics
Tyco Electronics Corporation
Harrisburg, Pa 17105-3608

NAME
MTA-156 HEADER ASSEMBLY, POLARIZED LOCK, STRAIGHT .045 SQUARE POST, TIN OR TIN-LEAD PLATED W/RETENTION PEGS

SIZE	CAGE CODE	DRAWING NO	RESTRICTED TO
A1	00779	C-1744384	—

CUSTOMER DRAWING | SCALE 5:1 | SHEET 1 OF 1 | REV B

AMP 4805 REV 31MAR2000

Downloaded from Arrow.com.