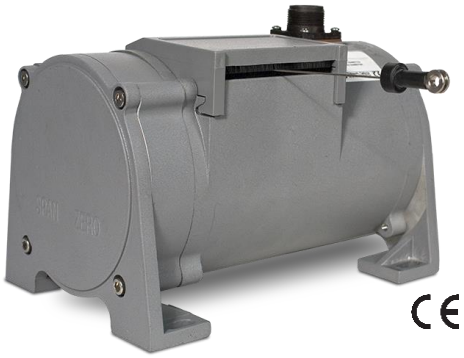

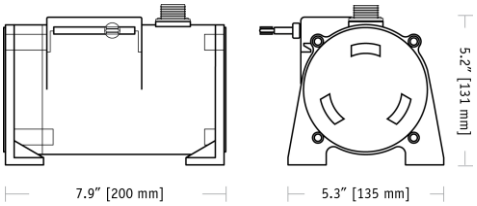

PT9101

Cable Actuated Sensor
Heavy Industrial • Voltage Divider

Absolute Linear Position to 550 inches (1400 cm)

Aluminum or Stainless Steel Enclosure Options

VLS Option to Prevent Free-Release Damage

IP68 • NEMA 6 Protection

The PT9101 is a work-horse for demanding long-range applications requiring a linear position measurements in ranges up to 1700 inches. Available with either a 500, 1K, 5K, or 10K ohm potentiometer, the PT9101 operates with any basic panel meter or programmable controller.

As a member of our innovative family of NEMA 4 rated cable-extension transducers, the PT9101 offers numerous benefits. It installs in minutes, works without perfect parallel alignment, and when its stainless-steel cable is retracted, it measures only 6".

Output Signal

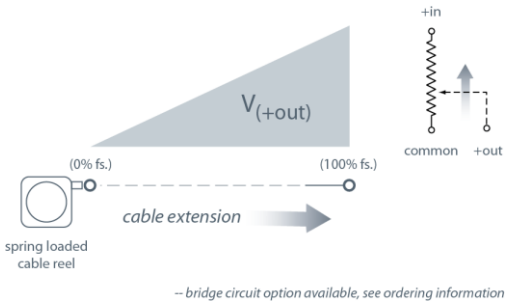

General

Full Stroke Range	0-75 to 0-550 inches
Output Signal	voltage divider (potentiometer)
Accuracy	± 0.10% full stroke
Repeatability	± 0.02% full stroke
Resolution	essentially infinite
Enclosure Material Options	stainless steel or thermoplastic
Sensor	plastic-hybrid precision potentiometer
Potentiometer Cycle Life	≥ 250,000
Maximum Retraction Acceleration	see ordering information
Maximum Velocity	see ordering information
Weight, Aluminum (Stainless Steel) Enclosure	8 lbs. (16 lbs.) max.

Electrical

Input Resistance Options	500, 1K, 5K, 10K Ω, bridge
Power Rating, Watt	2.0 at 70°F derated to 0 at 250° F
Recommended Maximum Input Voltage	30V (AC/DC)
Output Signal Change Over Full Stroke Range	94% ±4% of input voltage

Environmental

Enclosure	NEMA 4/4X/6, IP 67/68
Operating Temperature	-40° to 200°F (-40° to 90°C)
Vibration	up to 10 g to 2000 Hz maximum

Downloaded from Arrow.com.

Fig. 1 – Outline Drawing (18 oz. cable tension only)

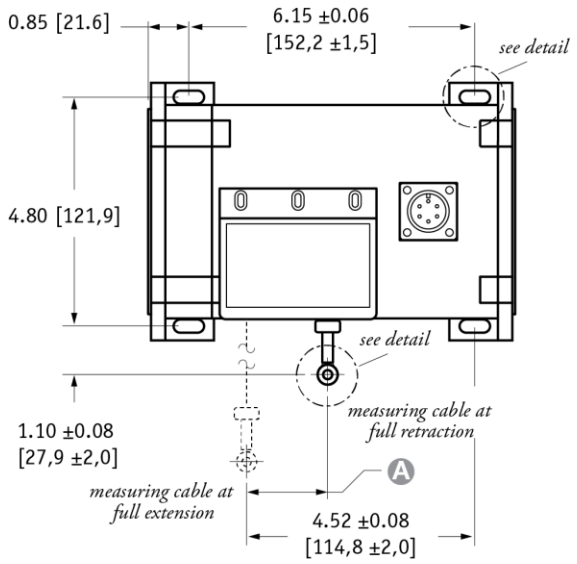

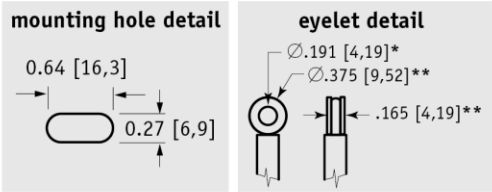

A DIMENSION (INCHES)

RANGE	MEASURING CABLE ∅.031 in.	∅.034 in.	∅.047 in.	∅.062 in.
75	n/a	0.22	0.29	0.37
100	n/a	0.29	0.39	0.49
150	n/a	0.44	0.59	0.73
200	n/a	0.58	0.79	0.98
250	n/a	0.73	0.98	1.22
300	n/a	0.88	1.18	1.47
350	n/a	1.02	1.38	1.71
400	n/a	1.17	1.57	1.96
450	n/a	1.31	1.77	n/a
500	n/a	1.46	1.97	n/a
550	1.61	1.61	n/a	n/a

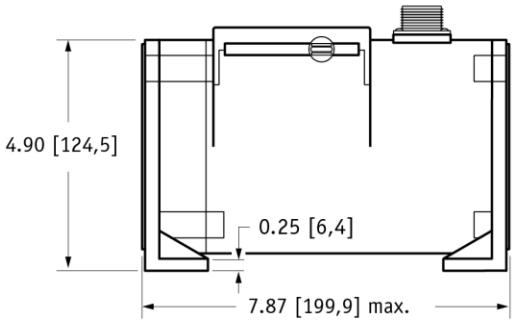

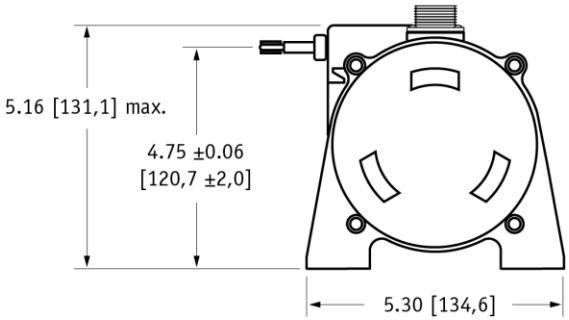

DIMENSIONS ARE IN INCHES [MM]
tolerances are 0.03 IN. [0.5 MM] unless otherwise noted.

* tolerance = +.005 –.001 [+.13 –.03]
** tolerance = +.005 –.005 [+.13 –.13]

Ordering Information

Model Number:

PT9101-_____ - __ __ __ - __ 1 __ 0
order code: R A B C D E F G

Sample Model Number:

PT9101 - 0500 - 111 - 1110

R	range:	500 inches
A	enclosure/cable tension:	aluminum/18 oz.
B	measuring cable:	.034 nylon-coated stainless
C	cable exit:	front
D	output signal:	500 ohm potentiometer
F	electrical connection:	6-pin plastic connector

Full Stroke Range:

R *order code:*	0075	0100	0150	0200	0250	0300	0350	0400	0450*	0500*	0550*
full stroke range, min:	75 in.	100 in.	150 in.	200 in.	250 in.	300 in.	350 in.	400 in.	450 in.	500 in.	550 in.

** – 36 oz. cable tension strongly recommended*

Downloaded from Arrow.com.

Enclosure Material and Measuring Cable Tension:

Ⓐ order code:	1	3	2	4
tension (±30%):	18 oz.		36 oz.	
enclosure material:	*powder-painted aluminum*	*303 stainless steel*	*powder-painted aluminum*	*303 stainless steel*
max. acceleration:	1 g	1 g	5 g	5 g
max. velocity:	60 inches/sec	60 inches/sec	200 inches/sec	200 inches/sec
	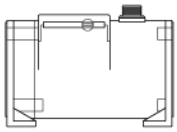	standard housing *see fig 1.*	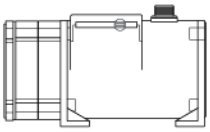	dual-spring housing *see fig 2.*

Measuring Cable:

Ⓑ order code:	1	2	3	4
cable construction:	Ø.034-inch nylon-coated stainless steel rope	Ø.047-inch bare stainless steel rope	Ø.058-inch PVC jacketed vectra fiber rope	Ø.031-inch bare stainless steel rope
available ranges:	*all ranges*	*all ranges up to 500 inches*	*all ranges up to 400 inches*	*550-inch range only*
general use:	indoor	outdoor, debris, high temperature	high voltage or magnetic field	outdoor, debris, high temperature

Cable Exit:

Ⓒ order code:	1	2	3	4
	front	top	back	down
	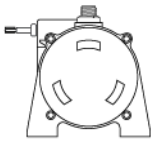	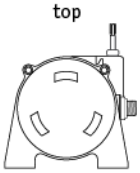	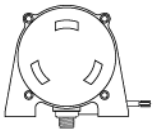	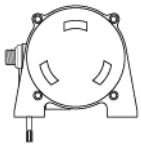

Output Signals:

Ⓓ order code:	1	2	3	4	5	6
	500 ohm*	1000 ohm*	5000 ohm*	10,000 ohm*	fixed bridge (2 mV/V)	adjustable bridge (0...30 mV/V)
				**tolerance = ±10%*		

circuit, options 1-4

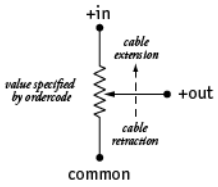

fixed bridge circuit

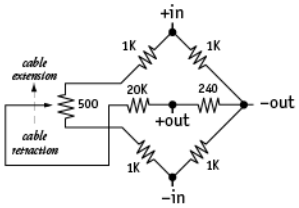

full scale output: 2 mV/V
zero adjust: not available

adjustable bridge cicuit

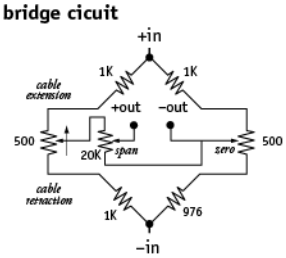

full scale output: adjustable from 0 to 30mV/V
zero adjust: to 50% of full stroke

Downloaded from Arrow.com.

Electrical Connection:

Ⓕ order code:

1	2	3	4
6-pin plastic connector w/mating plug	10-ft. [3 M] waterproof cable	6-pin metal connector w/mating plug	25-ft. [7.5 M] instrumentation cable
IP 67, NEMA 4X,6**	**IP 67, NEMA 4X**, 6**	**IP 65, NEMA 4**	**IP 67, NEMA 6**
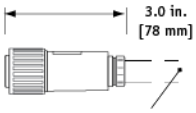	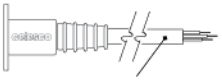	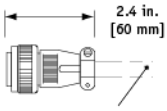	
3.0 in. [78 mm] 1/2 - 5/16" [14 - 8 mm] cable dia. 16 AWG max conductor size connector: MS3102E-14S-6P mating plug: MS3106E-14S-6S	10 ft. x 0.4-in. dia. [3 M x 10 mm dia.] 18 AWG, type SJTOW	2.4 in. [60 mm] 3/8-in. [9 mm] max cable dia. 16 AWG max conductor size connector: MS3102E-14S-6P mating plug: MS3106E-14S-6S	25 ft. x 0.2-in. dia. [7,5 M x 5 mm dia.] 24 AWG, shielded

Ⓕ order code:

5	6	7
100-ft. [30 M] waterproof cable	10-ft. [3 M] **pressure tested*** waterproof cable	100-ft. [30 M] **pressure tested*** waterproof cable
IP 67, NEMA 4X,6**	**IP 68, NEMA 4X**, 6P**	**IP 68, NEMA 4X**, 6P**
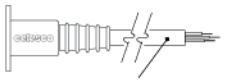	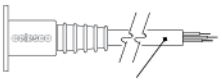	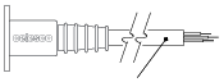
100 ft. x 0.4-in. dia. [30 M x 10 mm dia.] 18 AWG, type SJTOW	10 ft. x 0.4-in. dia. [3 M x 10 mm dia.] 18 AWG, type SJTOW	100 ft. x 0.4-in. dia. [30 M x 10 mm dia.] 18 AWG, type SJTOW

6-pin Mating Plug

pin	standard	bridge
A	+ in	+ in
B	common	– in
C	+ out	– out
D	-	+ out

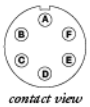

contact view

Waterproof Cable

color code	standard	bridge
WHITE	+ in	n/a
BLACK	common	n/a
GREEN	+ out	n/a

Instrumentation Cable

color code	standard	bridge
RED	+ in	+ in
BLACK	common	– in
GREEN	+ out	+ out
WHITE	-	– out

*Notes: *–Test pressure: 100 feet [30 meters] H_2O (40 PSID); Test Medium: Air; Duration: 2 hours. **–NEMA 4X applies to stainless steel enclosure only.*

VLS Option - Free Release Protection

The patented Celesco Velocity Limiting System (VLS) is an option for PT9000 Series cable extension transducers that limits cable retraction to a safe 40 to 55 inches per second for the single spring option and 40 to 80 inches per second for the higher tension dual spring option.

The VLS option prevents the measuring cable from ever reaching a damaging velocity during an accidental free release. This option is ideal for mobile applications that require frequent cable disconnection and reconnection. It prevents expensive unscheduled downtime due to accidental cable mishandling or attachment failure.

1. using guide below, select PT9101 model **PT9101-0100-111-1110**
2. remove "PT" from the model number ~~PT~~ **9101-0100-111-1110**
3. add "VLS" **VLS + 9101-0100-111-1110**
4. completed model number! **VLS9101-0100-111-1110**

VLS9101 - ____ - ____ ____ ____ - ____ 1 ____ 0

Ⓡ	Ⓐ	Ⓑ	Ⓒ	Ⓓ	Ⓔ	Ⓕ	Ⓖ
0075	1	1	1	1		1	
thru	2	2	2	2		2	
0550	3	3	3	3		3	
	4	4	4	4		4	
				5		5	
				6		6	
						7	

= available options.

Downloaded from Arrow.com.

Fig. 2 – Outline Drawing (36 oz. cable tension only)

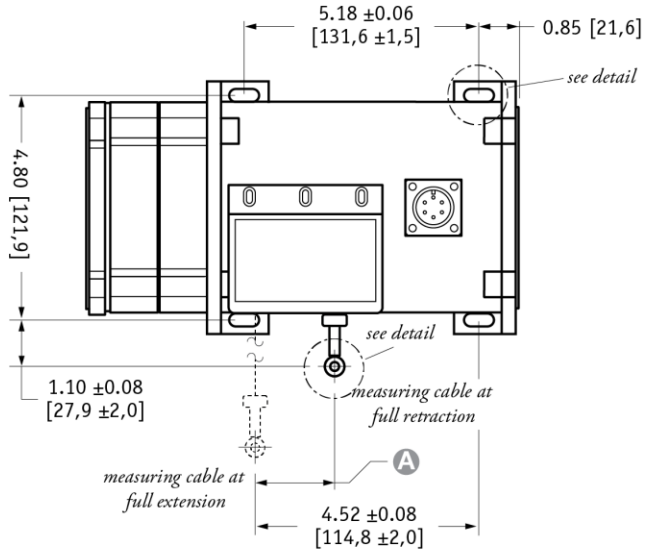

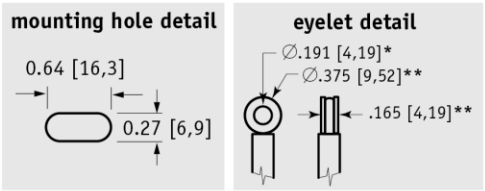

A DIMENSION (INCHES)

RANGE	MEASURING CABLE ∅.031 in.	∅.034 in.	∅.047 in.	∅.062 in.
75	n/a	0.22	0.29	0.37
100	n/a	0.29	0.39	0.49
150	n/a	0.44	0.59	0.73
200	n/a	0.58	0.79	0.98
250	n/a	0.73	0.98	1.22
300	n/a	0.88	1.18	1.47
350	n/a	1.02	1.38	1.71
400	n/a	1.17	1.57	1.96
450	n/a	1.31	1.77	n/a
500	n/a	1.46	1.97	n/a
550	1.61	1.61	n/a	n/a

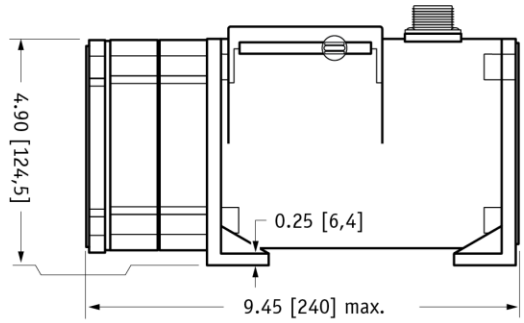

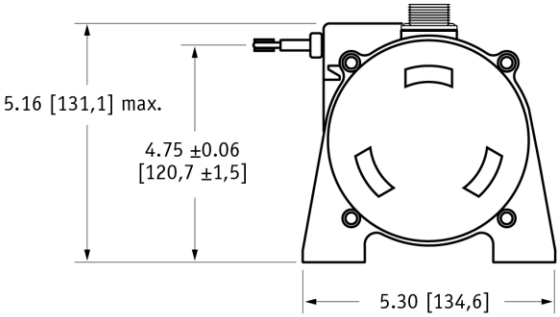

DIMENSIONS ARE IN INCHES [MM]
tolerances are 0.03 IN. [0.5 MM] unless otherwise noted.

* tolerance = +.005 –.001 [+.13 –.03]
** tolerance = +.005 –.005 [+.13 –.13]

NORTH AMERICA

Measurement Specialties, Inc.,
a TE Connectivity company
20630 Plummer Street
Chatsworth, CA 91311
Tel +1 800 423 5483
Tel +1 818 701 2750
Fax +1 818 701 2799
info@celesco.com

TE.com/sensorsolutions

Measurement Specialties, Inc., a TE Connectivity company.

Measurement Specialties, TE Connectivity, TE Connectivity (logo) and EVERY CONNECTION COUNTS are trademarks. All other logos, products and/or company names referred to herein might be trademarks of their respective owners.

The information given herein, including drawings, illustrations and schematics which are intended for illustration purposes only, is believed to be reliable. However, TE Connectivity makes no warranties as to its accuracy or completeness and disclaims any liability in connection with its use. TE Connectivity's obligations shall only be as set forth in TE Connectivity's Standard Terms and Conditions of Sale for this product and in no case will TE Connectivity be liable for any incidental, indirect or consequential damages arising out of the sale, resale, use or misuse of the product. Users of TE Connectivity products should make their own evaluation to determine the suitability of each such product for the specific application.

© 2015 TE Connectivity Ltd. family of companies All Rights Reserved.

PT9101 12/01/2015

Downloaded from Arrow.com.