PRODUCT NUMBER: 0665-0-15-80-30-27-10-0

www.mill-max.com
DATA SHEET

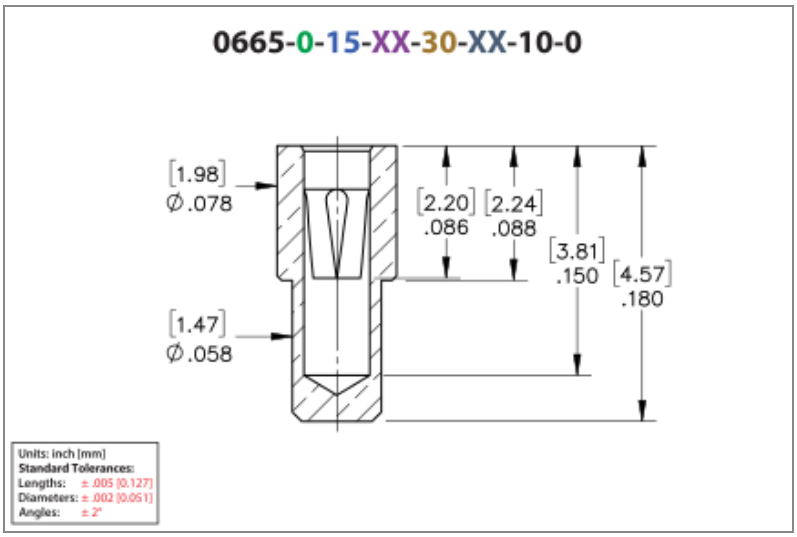



0665-0-15-80-30-27-10-0 SPECIFICATIONS

General Info	
Description[1]:	Receptacle With No Tail
Mounting Feature[2]:	Solder Mount
Mounting Hole:	.062" (1,575mm)
Pin Diameter Range:	.015"-.025" (0,381-0,635mm)
Packaging:	Packaged in Bulk
RoHS[3]:	Yes
Product Lifecycle[4]:	Active
Country Of Origin:	USA

Materials	
Shell Material[5]:	Brass Alloy
Shell Plating[6]:	200 - 300 µ" Tin (matte finish) over Nickel
Contact Plating[7]:	30 µ" Gold over Nickel

Technical Specs	
Mechanical life (Durability)[8]:	1,000 Cycles Minimum
Operating Temperature Range[9]:	-55/+125° C
Maximum Current:	12A @ 30° C Temp. Rise
Maximum Derated Current:	9.6A
Contact Resistance:	10 mΩ Max
Shock[10]:	No Elect. Discontinuity > 1µs @ 50g
Vibration[11]:	No Elect. Discontinuity > 1µs @ 10-2000HZ, 20 G

(c)2025 Mill-Max Mfg Corp. | 516-922-6000
190 Pine Hollow Road, Oyster Bay, NY 11771

Downloaded from Arrow.com.

NOTES:

1. Standard Tolerances:
   Lengths +/-.005" (0,13)
   Diameters: +/-.002" (0,051)
   Angles: +/- 2°
2. For through-hole solder mounting of this part, the suggestion is to make the finished hole size, at its minimum, .004" larger than the diameter being soldered into the mounting hole.
3. Mill-Max products labeled with the RoHS symbol are compliant with all three ROHS Directives. All of our products previously described as RoHS (2002/95/EC) and RoHS-2 (2011/65/EC) are also compliant with RoHS-3 (2015/863/EU).
4. Part is Active and in Production, No Scheduled Obsolescence
5. Brass Alloy 360 per ASTM B 16, or 385 per ASTM B455
6. TIN (100%) per ASTM B 545, Matte finish (With whisker and oxide inhibitors); NICKEL per ASTM B 689, Type 2 (Bright)
7. GOLD per ASTM B 488, Type 1 (99.7% min. gold), Code C (130-200 HK {Knoop hardness}), NICKEL per ASTM B 689, Type 2 (Bright)
8. Receptacles are capable of 1,000 Minimum insertion/extraction cycles for a broad range of applications. Mating pin size, shape and finish, along with application specific variables, will affect the life of a receptacle contact.
9. Per IEC 60512-11-(4,-9,-10,-12)
10. Per IEC 60512-6-3: Test 6c: Shock
11. Per IEC 60512-6-4: Test 6d: Vibration (sinusoidal)

ADDITIONAL PARTS, PACKAGING, & ASSEMBLY INFO

0665-0-57 Tape & Reel Details

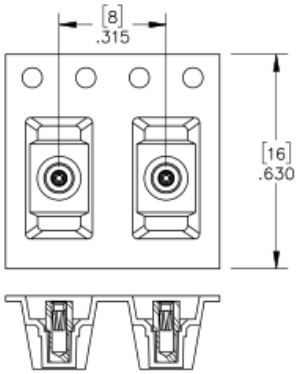

CONTACT:

(c)2025 Mill-Max Mfg Corp. | 516-922-6000
190 Pine Hollow Road, Oyster Bay, NY 11771

Downloaded from Arrow.com.

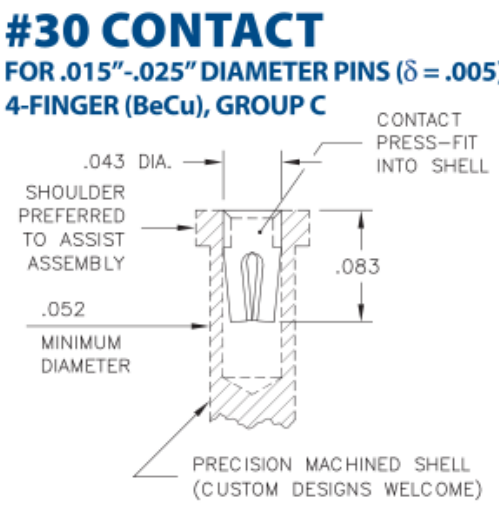

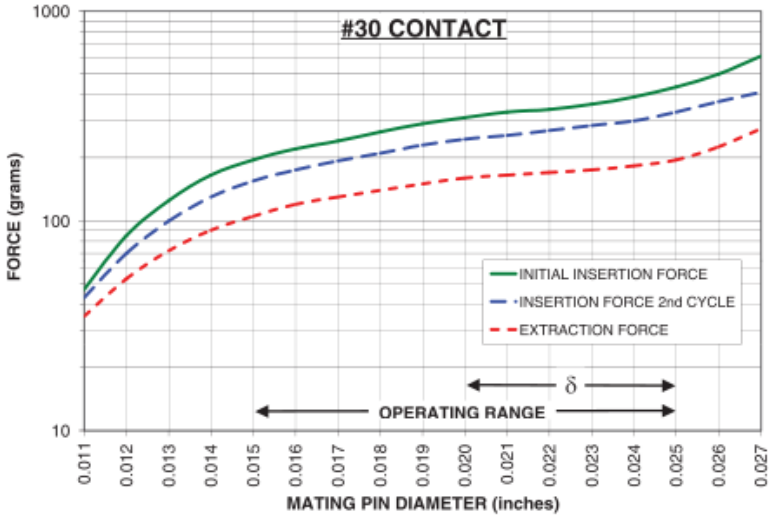

The insertion / extraction force characteristics above were derived using a 30 microinch gold-plated contact and polished steel gauge pins having a bullet-shaped tip.
The curves represent typical average values; they are best used to compare the differences between similar size contacts and to guide you in selecting one that is suitable for your application.
Your results may vary, so for your specification, we encourage you to obtain complimentary samples for your evaluation.

Material	Beryllium Copper	**Fingers**	4
Compliancy (δ)	0.005	**Length**	.083" (2,108mm)
Maximum Current	12A @ 30° C Temp. Rise	**Maximum Operating Temp @ Max Current**	120.00˚ C
20% De-rated Maximum Current	9.60A	**Contact Resistance**	10.00mΩ Max
Contact Group	C		

ADDITIONAL NOTES AND SPECIFICATIONS

In the interest of improved design, quality and performance , Mill-Max reserves the right to make changes in its specifications without prior notice. Specifications and tolerances are provided wherever possible. The tolerance on dimensions of critical to function features is typically held tighter than the stated standard tolerances, such as press-fits, holes and lengths affecting the coplanarity of SMT products. Due to the wide variety of interconnects Mill-Max offers, the specific tolerances vary from product to product. If you need information regarding the tolerance of a particular part, please contact Technical Services.

RELATED LINKS AND DOCUMENTS

- Engineering Notebook: **Introduction to Pin Receptacles**
- Environmental Compliance: https://www.mill-max.com/rohs

(c)2025 Mill-Max Mfg Corp. | 516-922-6000
190 Pine Hollow Road, Oyster Bay, NY 11771

Downloaded from Arrow.com.