USB3.0 COMPLIANT

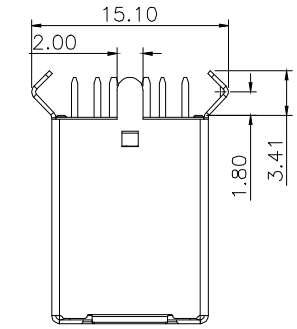

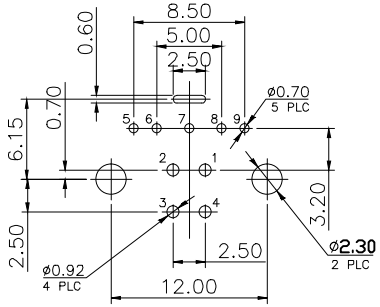

RECOMMEND P.C.B LAYOUT

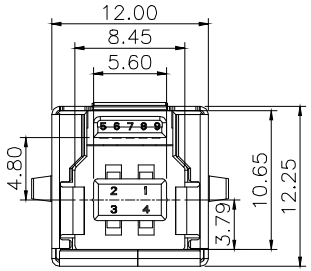

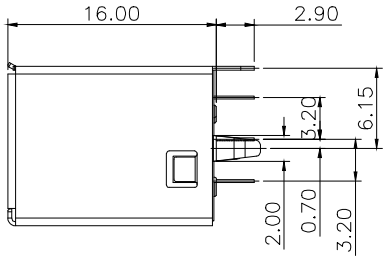

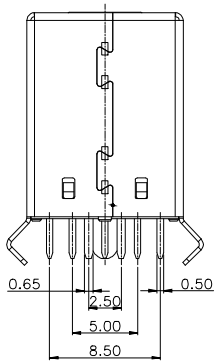

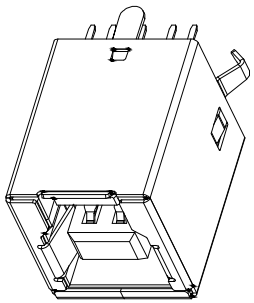

NOTE:
1.MATERIAL:
1.1 HOUSING: PBT UL 94V-0 Blue
1.2 CONTACT: Copper Alloy
1.3 SHELL:BRASS

2.PLATING:
2.1 CONTACT:
CONTACT AREA: 15U" Au
SOLDER AREA: TIN PLATED
UNDER PLATE: NI PLATED
2.2 SHELL: NI PLATED

3.MECHANICAL:
3.1 MATING FORCE:3.57kg MAX
3.2 UNMATING FORCE:1.02kg MIN
3.3 DURABILITY: 5000 CYCLES MIN

4.ELECTRICAL;
4.1 CONTACT RESISTANCE:30mΩ MAX
4.2 CURRENT RATING:1.5A
4.3 DIELECTRIC STRENGTH: 100V AC FOR 1MINUTE
4.4 INSULATION RESISTANCE 1000MΩ MIN

5.OPERATING TEMPEROTURE: -55°C ～ 85°C

6.PACKING: TRAY

RoHS compliant
Unit: mm

Scale	Free					Date	Name	Customer-No.
TOLERANCE					Drawn	16.06.2015	Jesse	
X.X	±0.30				Approved	16.06.2015	Jesse	ASSMANN WSW-No. A-USB3 B-TOP
X.XX	±0.20							
X.XXX	±0.10							Drawing-No. ASS 6865 CO rev00
DIM	TOL							
		⓪	Drawn	16.06.2015	Jesse			
Angle		Id.	Modification	Date	Name			Replace / Sheet

ASSMANN WSW components

Downloaded from Arrow.com.

SV3882