MICRO SWITCH
FREEPORT, ILLINOIS, U.S.A.
A DIVISION OF HONEYWELL
FED. MFG. CODE 91929

SWITCH — ENCLOSED

CATALOG LISTING
LSQ037

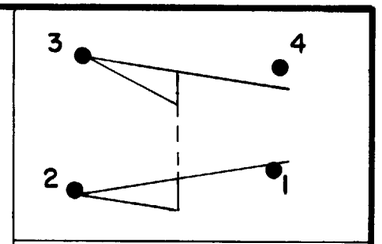

CIRCUIT DIAGRAM

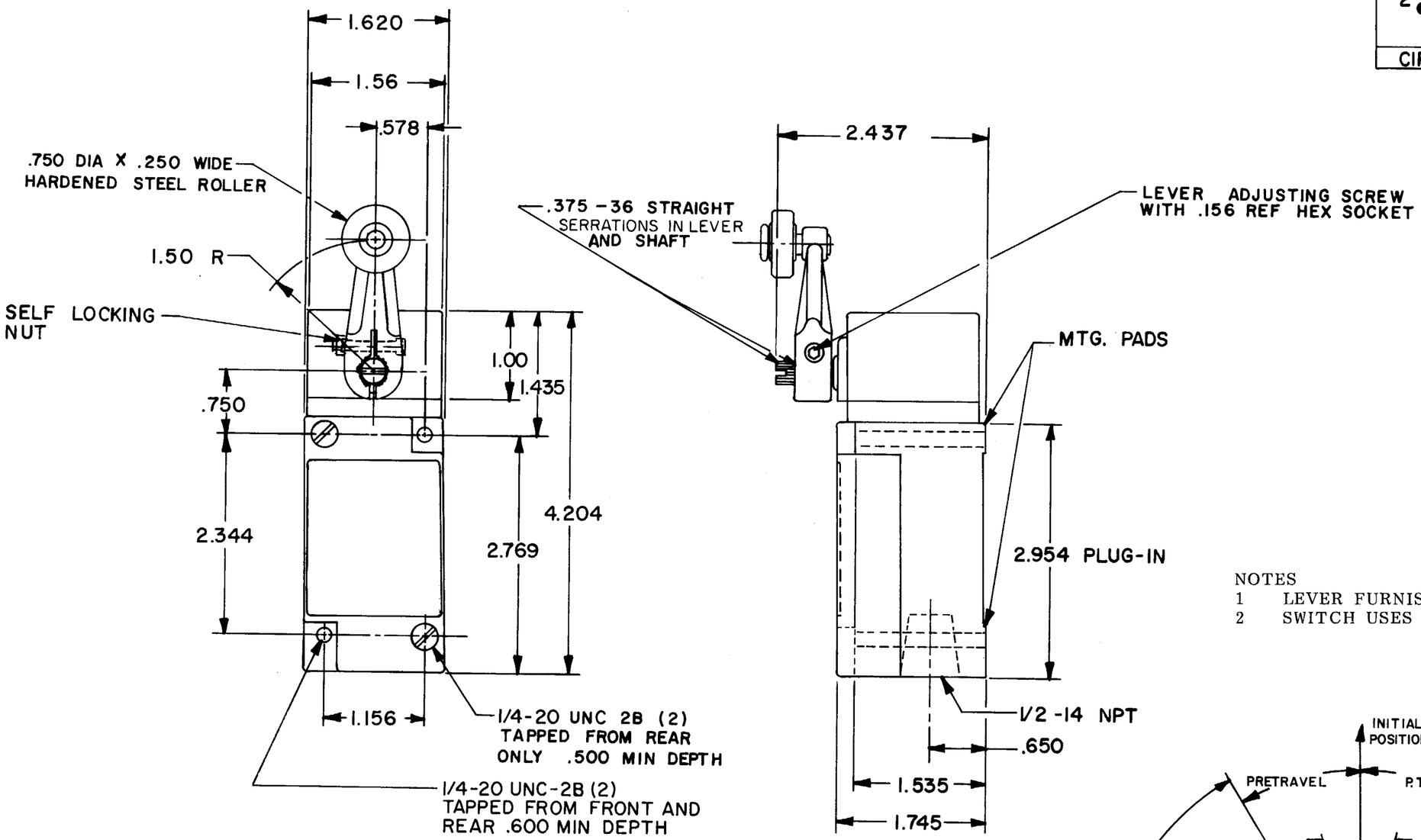

NOTES
1 LEVER FURNISHED UNASSEMBLED
2 SWITCH USES VITON SEALS

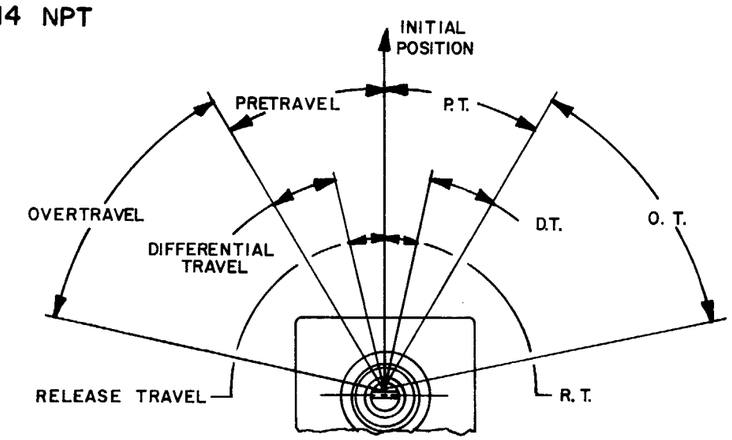

OPERATING DATA — SIDE ROTARY

THIS DRAWING COVERS A PROPRIETARY ITEM AND IS THE PROPERTY OF MICRO SWITCH, A DIVISION OF HONEYWELL. THIS DRAWING IS NOT TO BE COPIED OR USED WITHOUT THE APPROVAL OF MICRO SWITCH.

SCALE NONE
DO NOT SCALE PRINT

CHARACTERISTICS	
OPERATING TORQUE	4 IN LBS MAX
FULL TRAVEL TORQUE	4 IN LBS MAX
PRETRAVEL	9° MAX
DIFFERENTIAL TRAVEL	3° MAX
OVERTRAVEL	66° MIN
TOTAL TRAVEL	75° REF

ELECTRICAL DATA
CONTACT ARRANGEMENT

LSQ037 | M | DRAWING NUMBER | RELEASE NO. PR-3853-T | REPLACES
ISSUE X 2 4 3
CHECK | DRAWN GJW 8 JUN 81 | CHECK CEB 17 JUNE 81 | CHECK RCB 14 JUN 88 | CHECK 11 JUNE 81
FO-52851-B

REVISIONS
A CO 53617 TSK 8 AUG 83
B C060151 JAP 15 AUG 86
C C063742 TSK 14 JUN 88

Downloaded from Arrow.com.