Super Fast Surface Mount Rectifiers

US2AA-US2MA



Cathode Anode



SMA
CASE 403AE

Features

- Glass Passivated Chip Junction
- High Surge Capacity
- Low Forward Voltage Drop
- Fast Switching with Reverse Recovery Time: 50~75 ns Maximum
- UL Flammability 94 V – 0 Classification
- MSL 1 per J–STD–020
- RoHS Compliant / Green Molding Compound
- NRV Prefix for Automotive and Other Applications Requiring Unique Site and Control Change Requirements; AEC–Q101 Qualified and PPAP Capable*

MARKING DIAGRAM

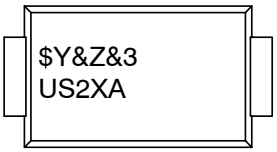

$Y	= **onsemi** Logo
&Z	= Assembly Plant Code
&3	= Data Code (Year & Week)
US2XA	= Specific Device Code
X	= A/B/D/F/G/J/K/M

ORDERING INFORMATION

See detailed ordering, marking and shipping information on page 1 of this data sheet.

NOTE: Some of the devices on this data sheet have been **DISCONTINUED**. Please refer to the table on page 1.

Table 1. ORDERING INFORMATION

Part Number	Top Mark	Package	Packing Method
US2AA	US2AA	DO−214AC (SMA)	Tape and Reel
US2BA	US2BA	DO−214AC (SMA)	Tape and Reel
US2DA	US2DA	DO−214AC (SMA)	Tape and Reel
US2FA, NRVUS2FA*	US2FA	DO−214AC (SMA)	Tape and Reel
US2GA, NRVUS2GA*	US2GA	DO−214AC (SMA)	Tape and Reel
US2JA, NRVUS2JA*	US2JA	DO−214AC (SMA)	Tape and Reel
US2KA, NRVUS2KA*	US2KA	DO−214AC (SMA)	Tape and Reel
US2MA, NRVUS2MA*	US2MA	DO−214AC (SMA)	Tape and Reel

DISCONTINUED (Note 1)

NRVUS2AA*	US2AA	DO−214AC (SMA)	Tape and Reel
NRVUS2BA*	US2BA	DO−214AC (SMA)	Tape and Reel
NRVUS2DA*	US2DA	DO−214AC (SMA)	Tape and Reel

†For information on tape and reel specifications, including part orientation and tape sizes, please refer to our Tape and Reel Packaging Specifications Brochure, BRD8011/D.

1. **DISCONTINUED:** These devices are not recommended for new design. Please contact your **onsemi** representative for information. The most current information on these devices may be available on www.onsemi.com.

© Semiconductor Components Industries, LLC, 2018

Downloaded from Arrow.com.

Table 2. ABSOLUTE MAXIMUM RATINGS

Symbol	Parameter	US2 AA	US2 BA	US2 DA	US2 FA	US2 GA	US2 JA	US2 KA	US2 MA	Unit
V_{RRM}	Repetitive Peak Reverse Voltage	50	100	200	300	400	600	800	1000	V
V_{RMS}	RMS Reverse Voltage	35	70	140	210	280	420	560	700	V
V_{DC}	DC Blocking Voltage	50	100	200	300	400	600	800	1000	V
$I_{F(AV)}$	Average Forward Rectified Current	1.5								A
I_{FSM}	Peak Forward Surge Current, 8.3 ms Single Half−Sine Wave, Superimposed on Rated Load	50								A
T_J	Operating Junction Temperature Range	−55 to +150								°C
T_{STG}	Storage Temperature Range	−55 to +150								°C

Stresses exceeding those listed in the Maximum Ratings table may damage the device. If any of these limits are exceeded, device functionality should not be assumed, damage may occur and reliability may be affected.

Table 3. THERMAL CHARACTERISTICS (NOTE 1) (Values are at T_A = 25°C unless otherwise noted)

Symbol	Parameter	Value	Unit
$R_{\theta JA}$	Typical Thermal Resistance, Junction−to−Ambient	189	°C/W
Ψ_{JL}	Typical Thermal Characteristics, Junction−to−Lead (with Reference to Cathode Pin)	31	°C/W

2. Device mounted at minimum pad.

Table 4. ELECTRICAL CHARACTERISTICS (Values are at T_A = 25°C unless otherwise noted)

Symbol	Parameter		Value								Unit
			US2 AA	US2 BA	US2 DA	US2 FA	US2 GA	US2 JA	US2 KA	US2 MA	
V_F	Maximum Instantaneous Forward Voltage (Note2) at Rated $I_{F(AV)}$		1.0				1.3	1.7			V
I_R	Maximum Reverse Current at Rated V_R	TJ = 25°C	5								μA
		TJ = 125°C	100								
t_{rr}	Maximum Reverse Recovery Time (Note 3)		50				75				ns
C_J	Typical Junction Capacitance (Note 4)		50				30				pF

3. Pulse test with PW = 300 μs, 1% duty cycle
4. Reverse recovery test conditions: I_F = 0.5 A, I_R = 1.0 A, I_{RR} = 0.25 A
5. Measured at 1 Mhz and applied reverse voltage of 4.0 V D.C.

Share Feedback
Your Opinion Matters

Downloaded from Arrow.com.

TYPICAL PERFORMANCE CHARACTERISTICS

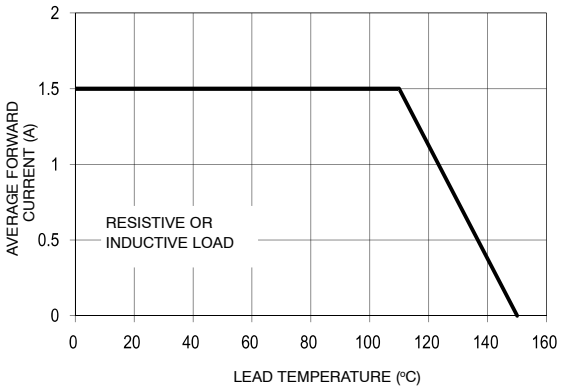

Figure 1. Forward Current Derating Curve

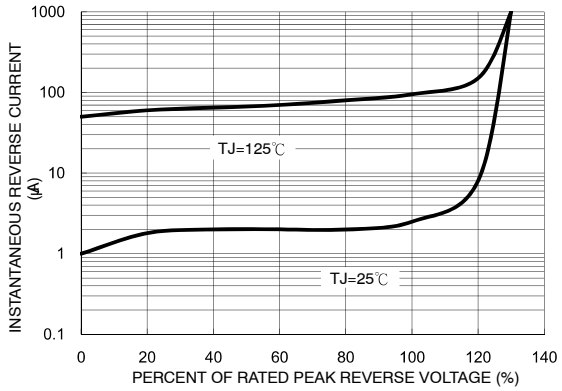

Figure 2. Typical Reverse Characteristics

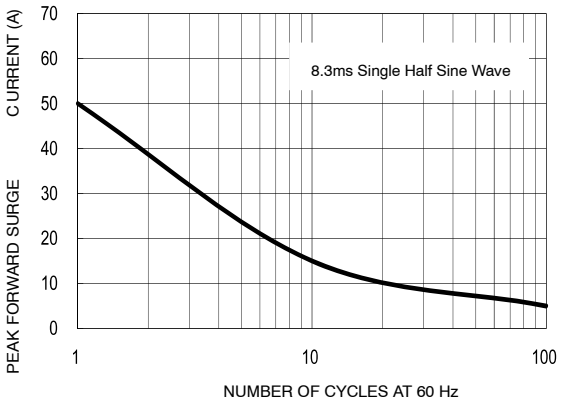

Figure 3. Maximum Non−Repetitive Forward Surge Current

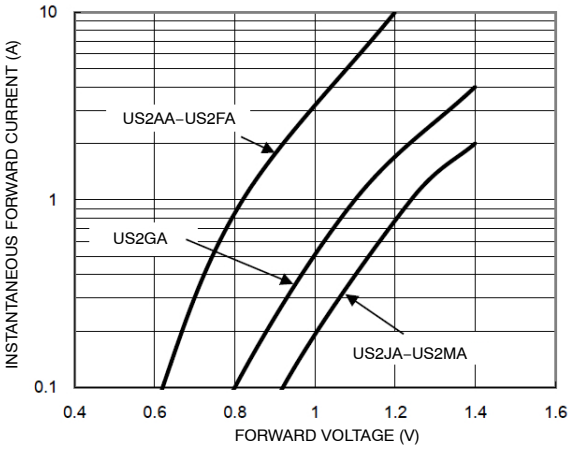

Figure 4. Typical Forward Characteristics

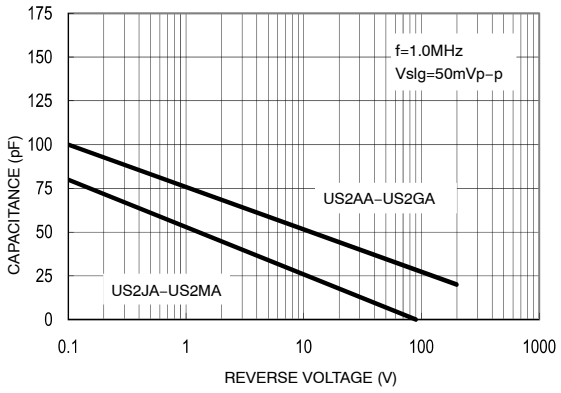

Figure 5. Typical Forward Characteristics

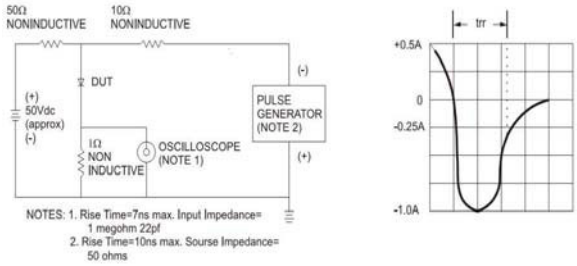

Figure 6. Typical Forward Characteristics

Share Feedback
Your Opinion Matters

Downloaded from Arrow.com.

SMA
CASE 403AE
ISSUE O

DATE 31 AUG 2016

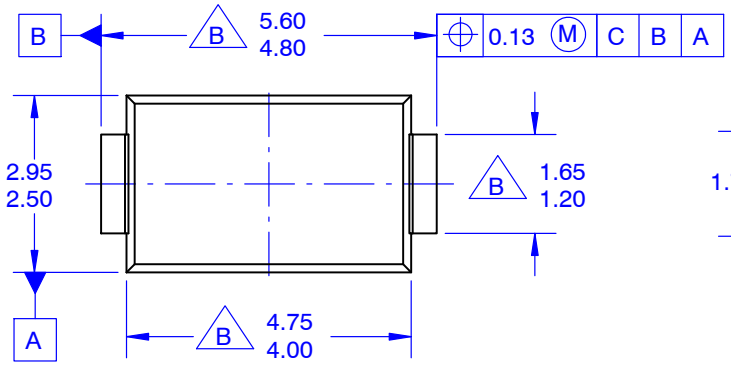

TOP VIEW

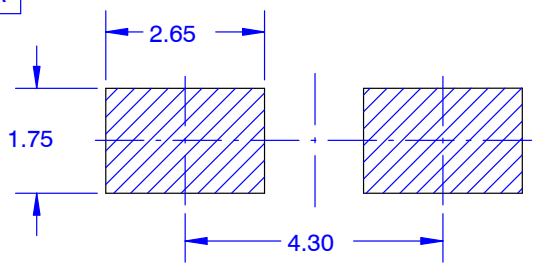

LAND PATTERN RECOMMENDATION

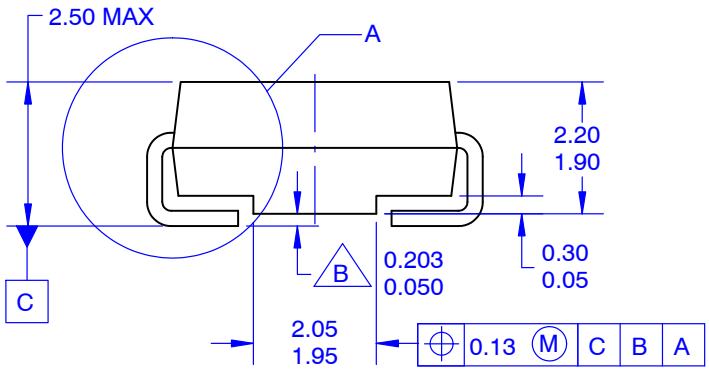

SIDE VIEW

NOTES:

A. EXCEPT WHERE NOTED, CONFORMS TO JEDEC DO214 VARIATION AC.
B DOES NOT COMPLY JEDEC STANDARD VALUE.
C. ALL DIMENSIONS ARE IN MILLIMETERS.
D. DIMENSIONS ARE EXCLUSIVE OF BURRS, MOLD FLASH AND TIE BAR PROTRUSIONS.
E. DIMENSIONS AND TOLERANCE AS PER ASME Y14.5–2009.
E. LAND PATTERN STD. DIOM5025X231M

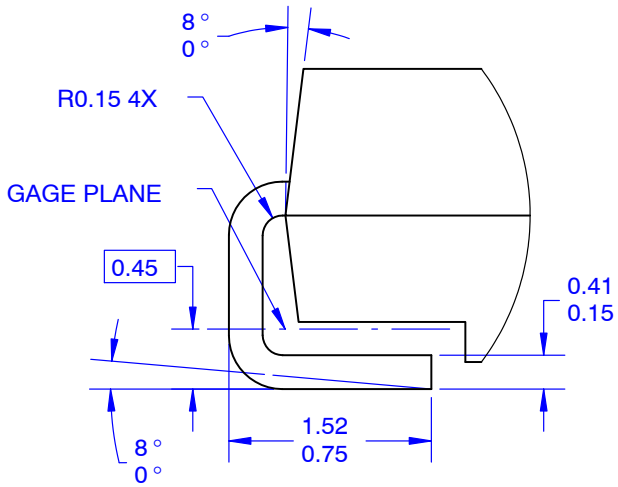

DETAIL A
SCALE 20 : 1

DOCUMENT NUMBER:	**98AON13440G**	Electronic versions are uncontrolled except when accessed directly from the Document Repository. Printed versions are uncontrolled except when stamped "CONTROLLED COPY" in red.	
DESCRIPTION:	**SMA**		**PAGE 1 OF 1**

onsemi and onsemi are trademarks of Semiconductor Components Industries, LLC dba **onsemi** or its subsidiaries in the United States and/or other countries. **onsemi** reserves the right to make changes without further notice to any products herein. **onsemi** makes no warranty, representation or guarantee regarding the suitability of its products for any particular purpose, nor does **onsemi** assume any liability arising out of the application or use of any product or circuit, and specifically disclaims any and all liability, including without limitation special, consequential or incidental damages. **onsemi** does not convey any license under its patent rights nor the rights of others.

Downloaded from Arrow.com.

onsemi, ONSEMI , and other names, marks, and brands are registered and/or common law trademarks of Semiconductor Components Industries, LLC dba "**onsemi**" or its affiliates and/or subsidiaries in the United States and/or other countries. **onsemi** owns the rights to a number of patents, trademarks, copyrights, trade secrets, and other intellectual property. A listing of **onsemi**'s product/patent coverage may be accessed at www.onsemi.com/site/pdf/Patent−Marking.pdf. **onsemi** reserves the right to make changes at any time to any products or information herein, without notice. The information herein is provided "as−is" and **onsemi** makes no warranty, representation or guarantee regarding the accuracy of the information, product features, availability, functionality, or suitability of its products for any particular purpose, nor does **onsemi** assume any liability arising out of the application or use of any product or circuit, and specifically disclaims any and all liability, including without limitation special, consequential or incidental damages. Buyer is responsible for its products and applications using **onsemi** products, including compliance with all laws, regulations and safety requirements or standards, regardless of any support or applications information provided by **onsemi**. "Typical" parameters which may be provided in **onsemi** data sheets and/or specifications can and do vary in different applications and actual performance may vary over time. All operating parameters, including "Typicals" must be validated for each customer application by customer's technical experts. **onsemi** does not convey any license under any of its intellectual property rights nor the rights of others. **onsemi** products are not designed, intended, or authorized for use as a critical component in life support systems or any FDA Class 3 medical devices or medical devices with a same or similar classification in a foreign jurisdiction or any devices intended for implantation in the human body. Should Buyer purchase or use **onsemi** products for any such unintended or unauthorized application, Buyer shall indemnify and hold **onsemi** and its officers, employees, subsidiaries, affiliates, and distributors harmless against all claims, costs, damages, and expenses, and reasonable attorney fees arising out of, directly or indirectly, any claim of personal injury or death associated with such unintended or unauthorized use, even if such claim alleges that **onsemi** was negligent regarding the design or manufacture of the part. **onsemi** is an Equal Opportunity/Affirmative Action Employer. This literature is subject to all applicable copyright laws and is not for resale in any manner.

ADDITIONAL INFORMATION

TECHNICAL PUBLICATIONS:
Technical Library: www.onsemi.com/design/resources/technical−documentation
onsemi Website: www.onsemi.com

ONLINE SUPPORT: www.onsemi.com/support
For additional information, please contact your local Sales Representative at www.onsemi.com/support/sales

◊

Downloaded from Arrow.com.