© 2024 TE Connectivity. All Rights Reserved.

REVISIONS					
P	LTR	DESCRIPTION	DATE	DWN	APVD
	A	TE STANDARD UPDATED	01AUG2024	KS	RB

EC No. 22779

Emergency Switch

Page 1 of 2

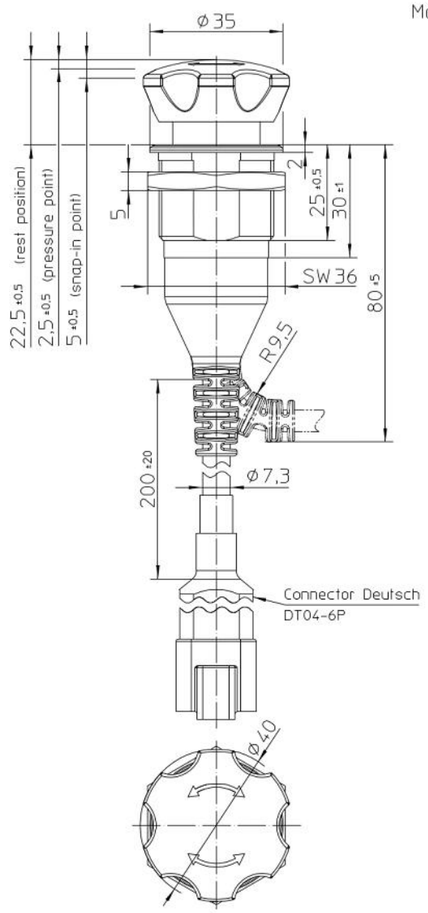

Mounting dimensions

Circuit Diagram:

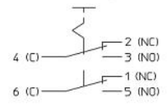

For this drawing we reserve the copyright in accordance with DIN ISO 16016

	Date	Name
Create	11.12.2018	Nonne
Edited	12.08.2019	Baung
Check	13.08.2019	Nonne

mm — Scale 1:1 — General Tolerances DIN ISO 2768 cL

Drawing No: ES-2200-T312-020C

NSN:

EC No. 22779

Emergency Switch

Page 2 of 2

Technical Data

Construction

Material socket	PA GF RAL 1003; UL 94 V0
Material button	PA GF RAL 3000; UL 94 HB
Protection interior	IP67 IEC 60529
	IP6K9K IEC 60529
connector (in mated condition)	IP67/ IP6K9K IEC 60529
Shock resistance	ISO 16750-3, 50g/ 6ms half sinus
Vibration resistance	ISO 16750-3; Test VII
Climatic resistance	IEC 60068-2-38
Chemical resistance	ISO 16750-5; Code Z
Temperature range	-40°C to +85°C
Torque M30x1,5 max.	6 Nm
Weight	approx. 95g

Mechanical Data

Locking (turn to reset)	EN 60947-5-5
Positive opening operation (NC)	EN 60947-5-1
Operating force max.	20-50 N
Torque knob max.	3 Nm
Current carrying party	Cu-Alloy
Contact material	Ag-Alloy
Mechanical life	40 000 cycles

Electrical Data

Voltage range	9VDC to 32VDC
Nominal voltage	12VDC / 24VDC
Dielectric withstanding voltage	1050 VAC for 1 min.
contact resistance	max. 50 mOhm
Insulation resistance	> 100 MOhm at 500 VDC
Continuous current	10mA to 8A
Current max.	10,1 A
Switching capacity min.	12 VDC, 10mA
Electrical life	
at 8 A / 28 VDC ohmic load	10 000 cycles
at 5 A / 28 VDC ohmic load	40 000 cycles
at 2 A / 28 VDC ohmic load	40 000 cycles
Short circuit protection	Automotive fast-acting fuse 10A

For this drawing we reserve the copyright in accordance with DIN ISO 16016

	Date	Name
Create	11.12.2018	Nonne
Edited	12.08.2019	Baung
Check	13.08.2019	Nonne

mm — Scale 1:1 — General Tolerances DIN ISO 2768 cL

Drawing No: ES-2200-T312-020C

NSN:

NOTE
Bemerkungen:

1 TE-CONNECTIVITY ORDER-NUMBER
TE-Connectivity Bestellnummer

ITEM NO	TE ORDER-NO.	REV.	DESCRIPTION
1	K1163871	A	Emergency Switch Not-Halt Schalter

THIS DRAWING IS A CONTROLLED DOCUMENT.

DIMENSIONS: mm

TOLERANCES UNLESS OTHERWISE SPECIFIED: DIN ISO 2768 cL

0 PLC ±
1 PLC ±
2 PLC ±
3 PLC ±
4 PLC ±
ANGLES ±

MATERIAL

FINISH

DWN Y.Nonnenmacher 11DEC2018
CHK R.Baumgartner 12AUG2019
APVD Y.Nonnenmacher 13AUG2019
PRODUCT SPEC
APPLICATION SPEC
WEIGHT

TE Connectivity

NAME
EMERGENCY SWITCH
Not-Halt Schalter

SIZE	CAGE CODE	DRAWING NO	RESTRICTED TO
A3	00779	C-ES-2200-T312-020C	-

CUSTOMER DRAWING

SCALE

SHEET 1 OF 1

REV A

1470-19 (3/13)

Downloaded from Arrow.com.