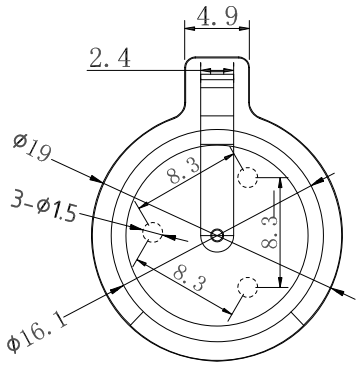

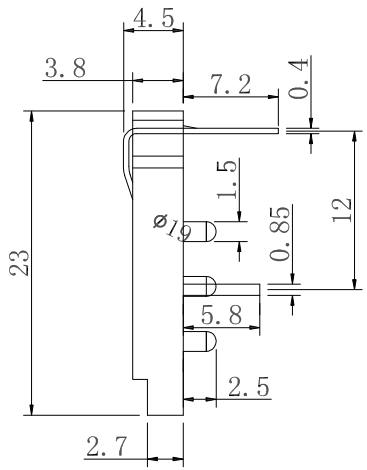

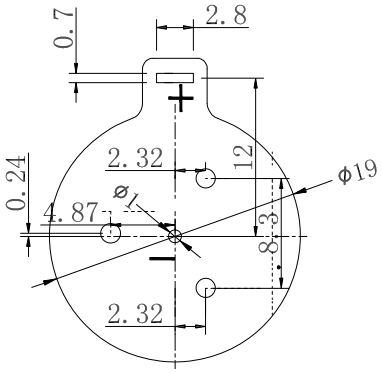

PCB Layout Diagram
Top View

NOTE:

1.MATERIAL
1.1 Base:PBT,Black
1.1 Contact: Mn Steel,Brass

2.FINISH
2.1 Contact:Au or Tin over Nickel

3.ELECTRIC
3.1 Contact Resistance:30 Milliohms Max.
3.2 Insulation Resistance:1000 Mege Ohms Min.
3.3 Dielectnic Voltage:500V AC One Sec Level

4.Operating Temperature:-25°C To +85°C
5.Packing: Tray

Order Code:A-BAT-CH-C5-EA-xTP2
- G:Gold Flash
- Z:Tin

RoHS compliant
unit:mm

Scale	Free
TOLERANCE	
X.	±0.35
.X	±0.25
.XX	±0.20
.XXX	±0.15
DIM	TOL
Angle	TOL

Id.	modification	Date	Name
0	Drawn	12.15.2021	Peter

	Date	Name
Drawn	12.15.2021	Peter
Approved	12.15.2021	Peter

ASSMANN WSW components

Description: Coin Cell Holders CR1620 Type

ASSMANN WSW-NO.
A-BAT-CH-C5-EA-xTP2

Drawing-No.
ASS 9146 CO

rev00

Customer-No.

SHEET 1 / 1

SV5043

Downloaded from Arrow.com.