General Purpose Chip Resistors <High power>

MCR25S JQP series

Datasheet

[PRODUCT SPECIFICATION]

1. SCOPE OF APPLICATION

This specification defines the General Purpose Chip Resistors <High power> "MCR25S JQP (including jumper type)" a product of ROHM Co., Ltd.

2. PRODUCT MODEL

MCR25S	JQP	☐	☐	☐☐☐☐ *
TYPE	PACKAGING CODE	TOLERANCE	SPECIAL CODE	RESISTANCE VALUE (IEC CODE)

*Jumper is 「MCR25S JQP J 000」

PACKAGING CODE

CODE	PACKAGE	QUANTITY
JQP	180mm (7inch) reel, embossed tape (4mm pitch)	4,000 pcs/reel

TOLERANCE

CODE	F (±1%)	J (±5%)

SPECIAL CODE

CODE	L	Resistance range (1Ω≦R<10Ω)

RESISTANCE VALUE

4 digits	F
3 digits	J

3. RATING

ITEMS	CONDITIONS	SPECIFICATIONS
RATED POWER	For resistors operated at the ambient temperature in excess 70°C or terminal temperature in excess 110°C, the load shall be derated in accordance with Fig.1 and Fig.2 The measurement part of terminal temperature is center of fillet's surface with load. Fig.1 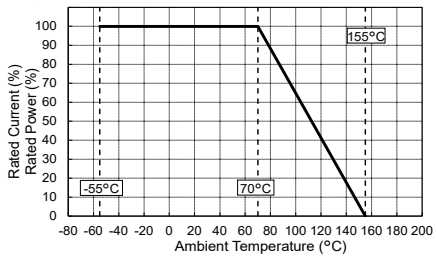 Fig.2 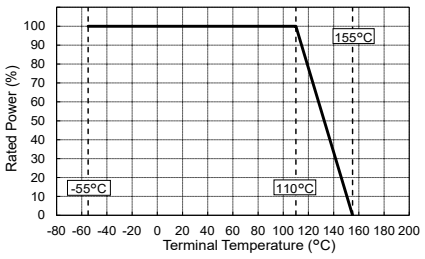	0.5W at Ta=70°C at Tk=110°C Ta=Ambient temperature Tk=Terminal temperature
RATED VOLTAGE	Rated voltage is determined from the following. When rated voltage exceeds the limiting element voltage, the limiting element voltage shall be the rated voltage. $E = \sqrt{P \times R}$ E : RATED VOLTAGE (V) P : RATED POWER (W) R : RESISTANCE (Ω) LIMITING ELEMENT VOLTAGE	200V
RESISTANCE	See Table 1	
OPERATING TEMPERATURE		-55°C～+155°C

Jumper type

RESISTANCE	MAX.50mΩ
RATED CURRENT	2A
TEMPERATURE RANGE	-55°C～+155°C

Table 1

RESISTANCE RANGE (Ω)	TOLERANCE	SPECIAL CODE	TEMPERATURE COEFFICIENT(ppm/°C) +25°C/-55°C, +25°C/+125°C
1≦R<10 (E24)	F (±1%)	L	±200
10≦R≦2.2M (E24,E96)		-	±100
1≦R<5.6 (E24)	J (±5%)	L	±400
5.6≦R<10 (E24)			±200
10≦R≦3.3M (E24)		-	

© 2025 ROHM Co., Ltd. All rights reserved.

Downloaded from Arrow.com.

4. DIMENSIONS (UNIT : mm)

Simplified outline of an external dimensions.

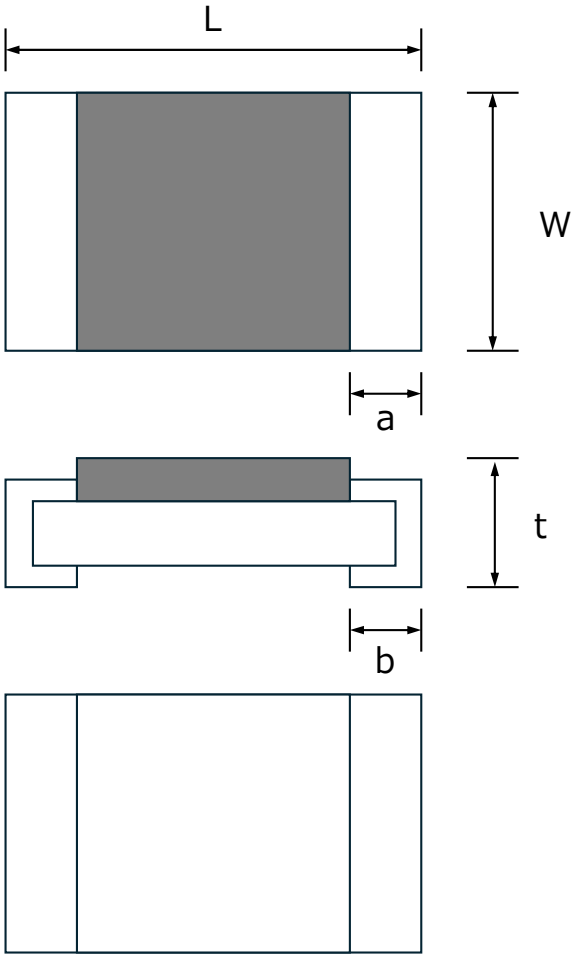

L	W	t	a	b
3.20+0.15 -0.20	2.50±0.15	0.55±0.10	0.40±0.20	0.50±0.25

5. MARKINGS ON CHIP RESISTOR

There is no marking on the chip resistors.

© 2025 ROHM Co., Ltd. All rights reserved.

Downloaded from Arrow.com.

6. CHARACTERISTICS

ITEMS	GUARANTEED VALUE		TEST CONDITIONS (JIS C 5201-1)
	RESISTOR TYPE	JUMPER TYPE	
6.1 RESISTANCE	F : ±1% J : ±5%	MAX. 50mΩ	JIS C 5201-1 6.1 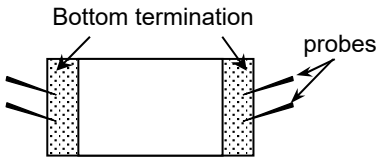
6.2 VARIATION OF RESISTANCE WITH TEMPERATURE	See Table 1	MAX. 50mΩ	JIS C 5201-1 6.2 Measurement : +25°C/-55°C, +25°C/+125°C
6.3 OVERLOAD	±(2.0%＋0.1Ω)	MAX. 50mΩ	JIS C 5201-1 8.1 Rated voltage(current)×2.5, 5s Max. overload voltage : 400V
6.4 SOLDERABILITY	A new uniform coating of minimum of 95% of the surface being immersed and no soldering damage.		JIS C 5201-1 11.1 Rosin-Ethanol solution(25% mass) Soldering condition : 245±5°C Duration of immersion : 2.0±0.5s.
6.5 RESISTANCE TO SOLDERING HEAT	±(1.0%＋0.05Ω) No remarkable abnormality on the appearance.	MAX. 50mΩ	JIS C 5201-1 11.2 Soldering condition : 260±5°C Duration of immersion : 10±1s.
6.6 RAPID CHANGE OF TEMPERATURE	±(1.0%＋0.05Ω)	MAX. 50mΩ	JIS C 5201-1 10.1 Test temp. : -55°C～+125°C Test time : 1,000cycles
6.7 DAMP HEAT, STEADY STATE	±(3.0%＋0.1Ω)	MAX. 100mΩ	JIS C 5201-1 10.4 Test temp. : 85°C Relative Humidity : 85% Test time : 1,000h
6.8 ENDURANCE AT 70°C	±(3.0%＋0.1Ω)	MAX. 100mΩ	JIS C 5201-1 7.1 Test temp. : Ta=70°C Test temp. : Tk=110°C Rated voltage(current) 1.5h_ON / 0.5h_OFF Test time : 1,000h
6.9 ENDURANCE AT MAXIMUM TEMPERATURE	±(3.0%＋0.1Ω)	MAX. 100mΩ	JIS C 5201-1 7.3 Test temp. : 155°C Test time : 1,000h
6.10 RESISTANCE TO SOLVENT	±(1.0%＋0.05Ω)	MAX. 50mΩ	JIS C 5201-1 11.3 23±5°C , Immersion cleaning, 5±0.5min Solvent : Isopropyl alcohol
6.11 BEND STRENGTH OF THE END FACE PLATING	±(1.0%＋0.05Ω) Without mechanical damage such as breaks.	MAX. 50mΩ	JIS C 5201-1 9.8 Endurance with 90mm width Deflection : 1mm

© 2025 ROHM Co., Ltd. All rights reserved.

Downloaded from Arrow.com.

[PACKAGE SPECIFICATIONS]

1. SCOPE OF APPLICATION

This specification defines the taping specifications for General Purpose Chip Resistors <High power> "MCR25S JQP (including jumper type)".

2. PRODUCT MODEL

MCR25S	JQP	□	□	□□□□
TYPE	PACKAGING CODE	TOLERANCE	SPECIAL CODE	RESISTANCE VALUE (IEC CODE)

PACKAGING CODE : See page 1/7.

3. TAPE DIMENSIONS (UNIT : mm)

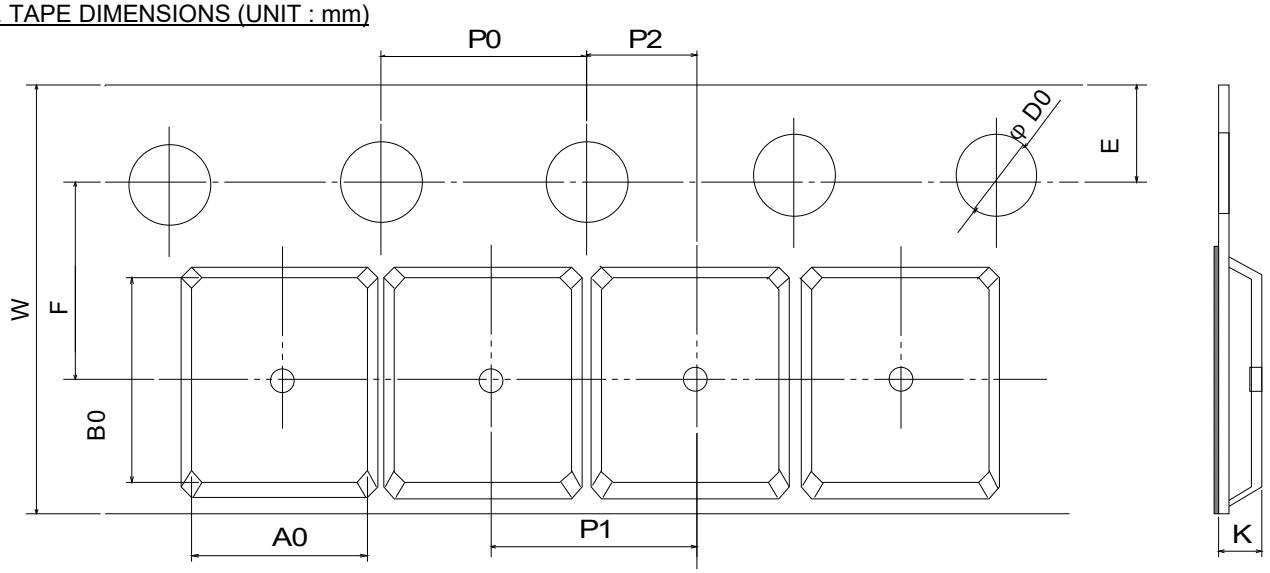

W	F	E	A0	B0
8.0±0.3	3.50±0.05	1.75±0.10	3.0±0.1	3.5±0.1
D0	P0	P1	P2	K
φ1.5 +0.1 0	4.0±0.1	4.0±0.1	2.00±0.05	MAX.1.1

© 2025 ROHM Co., Ltd. All rights reserved.

Downloaded from Arrow.com.

4. MECHANICAL CHARACTERISTICS

4.1 COVER TAPE PEELING STRENGTH
: 0.1N ≦ PEELING STRENGTH ≦ 0.8N

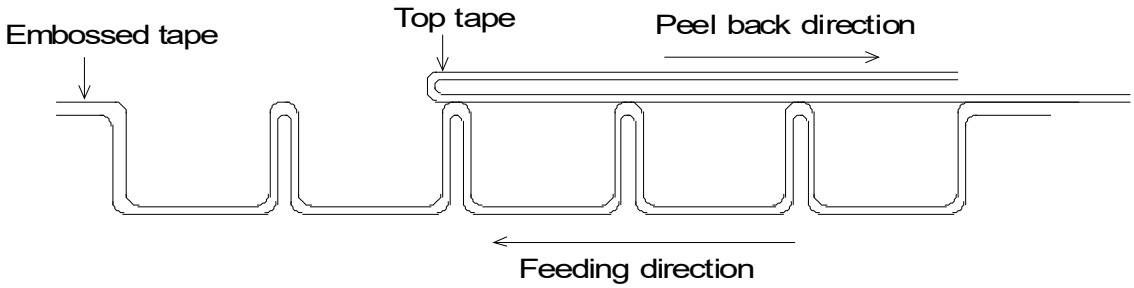

4.2 Embossed tape should not adhere to top tape when top tape is peeled back, and peel back direction is as follows.

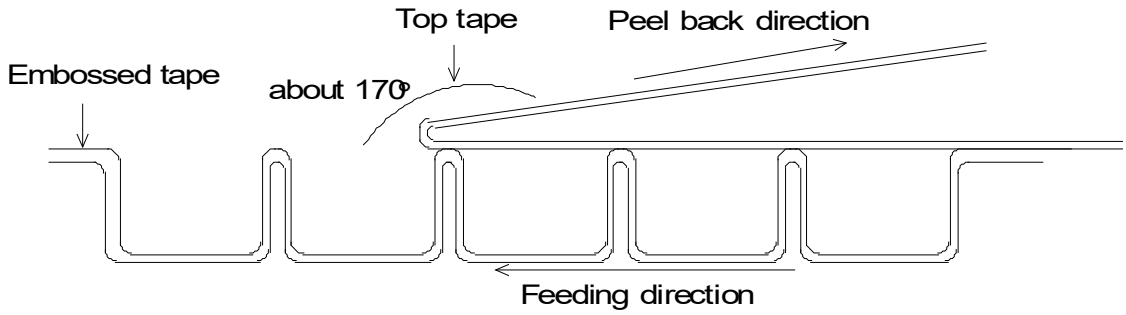

4.3 DURABILITY OF COVER TAPE (TOP TAPE)
Top tape shall not be off the base paper after 120h at the atmosphere of 60±3°C, 90～95%(Relative Humidity).

5. TAPE PACKAGING

5.1 Components are set in tape cavities with the same side (Resistive element upside).

5.2 The accumulated pitch tolerance shall be within ±0.2mm at 10 pitches.

5.3 Tape bent resistance
No damage on the tape and the cavity when tape is bent with the radius of 15mm.

5.4 Components in tape cavity shall not adhere to bottom / cover tape.

5.5 Components shall not be blocked by tape fragments or foreign materials when they are taken out from cavities.

5.6 The top tape shall not cover up the sprocket holes of tape.

5.7 The number of missing components shall not exceed 0.1% of the total number of components (marked number) or one whichever is the larger, and no consecutive missing exceeding two is allowed.

© 2025 ROHM Co., Ltd. All rights reserved.

Downloaded from Arrow.com.

6. TAPE REEL

6.1 Tape feeding direction

Tape feeding direction shall be shown in the picture drawn below.

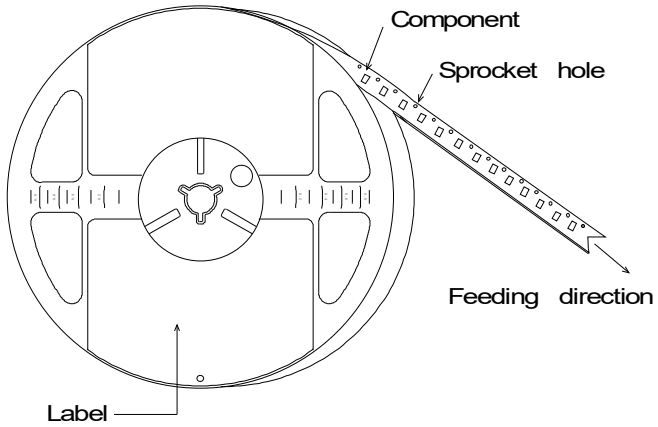

6.2 Leader tape

Leader tape is given a portion of only cover tape and of blank cavities. (no resistor.)

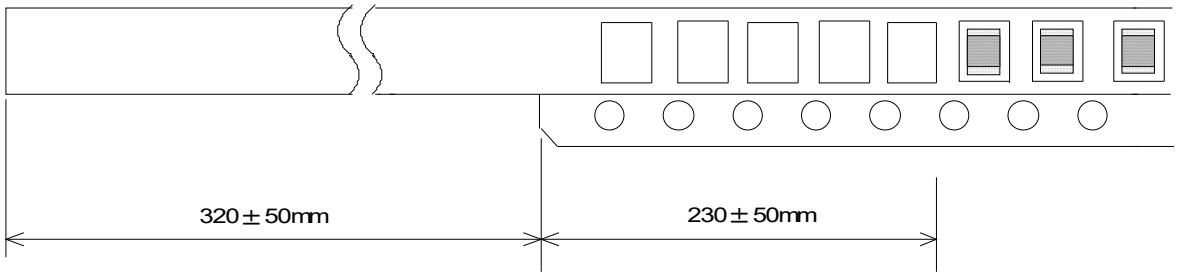

(Note) The leader portion of cover tape will not stick to embossed tape. (about 50～100mm)

6.3 Trail tape

Trail tape is given a portion of blank cavities (no resistor).
And the trail tape should not be fixed by adhesive to real and must be the one which can be pulled out easily from the reel.

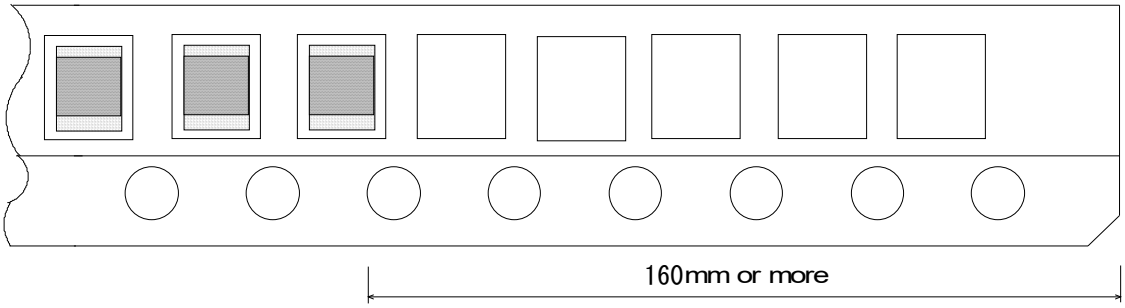

© 2025 ROHM Co., Ltd. All rights reserved.

Downloaded from Arrow.com.

7. REEL DIMENSIONS (UNIT : mm)

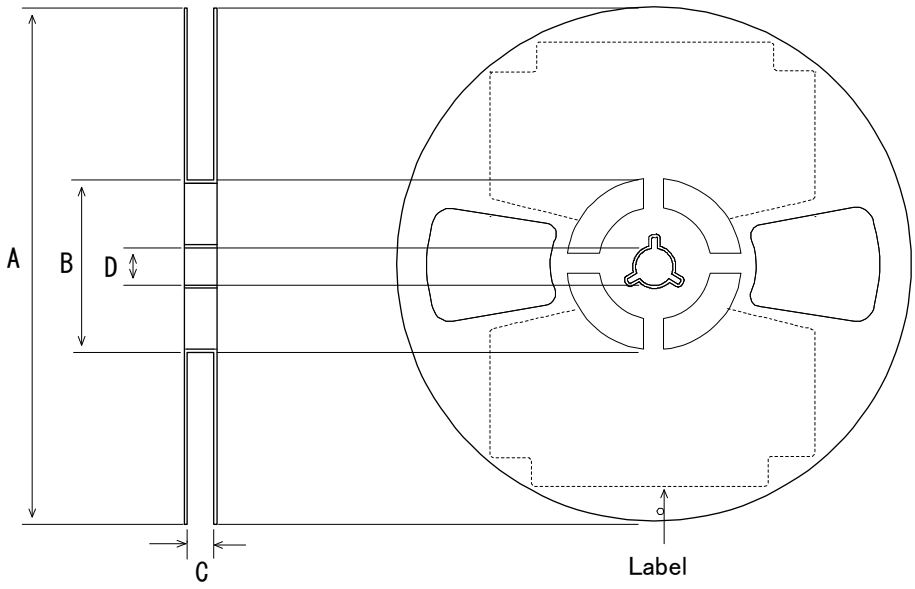

A	B	C	D
φ180 0 -1.5	φ60 +1.0 0	9 +1.0 0	φ13±0.2

MATERIAL

REEL : POLYSTYRENE

© 2025 ROHM Co., Ltd. All rights reserved.

Downloaded from Arrow.com.

Notice

Precaution on using ROHM Products

1. If you intend to use our Products in devices requiring extremely high reliability (such as medical equipment (Note 1), aircraft/spacecraft, nuclear power controllers, etc.) and whose malfunction or failure may cause loss of human life, bodily injury or serious damage to property ("Specific Applications"), please consult with the ROHM sales representative in advance. Unless otherwise agreed in writing by ROHM in advance, ROHM shall not be in any way responsible or liable for any damages, expenses or losses incurred by you or third parties arising from the use of any ROHM's Products for Specific Applications.

(Note1) Medical Equipment Classification of the Specific Applications

JAPAN	USA	EU	CHINA
CLASSⅢ	CLASSⅢ	CLASSⅡb	CLASSⅢ
CLASSⅣ		CLASSⅢ	

2. ROHM designs and manufactures its Products subject to strict quality control system. However, semiconductor products can fail or malfunction at a certain rate. Please be sure to implement, at your own responsibilities, adequate safety measures including but not limited to fail-safe design against the physical injury, damage to any property, which a failure or malfunction of our Products may cause. The following are examples of safety measures:
   [a] Installation of protection circuits or other protective devices to improve system safety
   [b] Installation of redundant circuits to reduce the impact of single or multiple circuit failure

3. Our Products are not designed under any special or extraordinary environments or conditions, as exemplified below. Accordingly, ROHM shall not be in any way responsible or liable for any damages, expenses or losses arising from the use of any ROHM's Products under any special or extraordinary environments or conditions. If you intend to use our Products under any special or extraordinary environments or conditions (as exemplified below), your independent verification and confirmation of product performance, reliability, etc, prior to use, must be necessary:
   [a] Use of our Products in any types of liquid, including water, oils, chemicals, and organic solvents
   [b] Use of our Products outdoors or in places where the Products are exposed to direct sunlight or dust
   [c] Use of our Products in places where the Products are exposed to sea wind or corrosive gases, including Cl_2, H_2S, NH_3, SO_2, and NO_2
   [d] Use of our Products in places where the Products are exposed to static electricity or electromagnetic waves
   [e] Use of our Products in proximity to heat-producing components, plastic cords, or other flammable items
   [f] Sealing or coating our Products with resin or other coating materials
   [g] Use of our Products without cleaning residue of flux (Exclude cases where no-clean type fluxes is used. However, recommend sufficiently about the residue.); or Washing our Products by using water or water-soluble cleaning agents for cleaning residue after soldering
   [h] Use of the Products in places subject to dew condensation

4. The Products are not subject to radiation-proof design.

5. Please verify and confirm characteristics of the final or mounted products in using the Products.

6. In particular, if a transient load (a large amount of load applied in a short period of time, such as pulse, is applied, confirmation of performance characteristics after on-board mounting is strongly recommended. Avoid applying power exceeding normal rated power; exceeding the power rating under steady-state loading condition may negatively affect product performance and reliability.

7. De-rate Power Dissipation depending on ambient temperature. When used in sealed area, confirm that it is the use in the range that does not exceed the maximum junction temperature.

8. Confirm that operation temperature is within the specified range described in the product specification.

9. ROHM shall not be in any way responsible or liable for failure induced under deviant condition from what is defined in this document.

Precaution for Mounting / Circuit board design

1. When a highly active halogenous (chlorine, bromine, etc.) flux is used, the residue of flux may negatively affect product performance and reliability.

2. In principle, the reflow soldering method must be used on a surface-mount products, the flow soldering method must be used on a through hole mount products. If the flow soldering method is preferred on a surface-mount products, please consult with the ROHM representative in advance.

For details, please refer to ROHM Mounting specification

© 2015 ROHM Co., Ltd. All rights reserved.

Downloaded from Arrow.com.

Precautions Regarding Application Examples and External Circuits

1. If change is made to the constant of an external circuit, please allow a sufficient margin considering variations of the characteristics of the Products and external components, including transient characteristics, as well as static characteristics.

2. You agree that application notes, reference designs, and associated data and information contained in this document are presented only as guidance for Products use. Therefore, in case you use such information, you are solely responsible for it and you must exercise your own independent verification and judgment in the use of such information contained in this document. ROHM shall not be in any way responsible or liable for any damages, expenses or losses incurred by you or third parties arising from the use of such information.

Precaution for Electrostatic

This Product is electrostatic sensitive product, which may be damaged due to electrostatic discharge. Please take proper caution in your manufacturing process and storage so that voltage exceeding the Products maximum rating will not be applied to Products. Please take special care under dry condition (e.g. Grounding of human body / equipment / solder iron, isolation from charged objects, setting of Ionizer, friction prevention and temperature / humidity control).

Precaution for Storage / Transportation

1. Product performance and soldered connections may deteriorate if the Products are stored in the places where:
   - [a] the Products are exposed to sea winds or corrosive gases, including Cl_2, H_2S, NH_3, SO_2, and NO_2
   - [b] the temperature or humidity exceeds those recommended by ROHM
   - [c] the Products are exposed to direct sunshine or condensation
   - [d] the Products are exposed to high Electrostatic

2. Even under ROHM recommended storage condition, solderability of products out of recommended storage time period may be degraded. It is strongly recommended to confirm solderability before using Products of which storage time is exceeding the recommended storage time period.

3. Store / transport cartons in the correct direction, which is indicated on a carton with a symbol. Otherwise bent leads may occur due to excessive stress applied when dropping of a carton.

4. Use Products within the specified time after opening a humidity barrier bag. Baking is required before using Products of which storage time is exceeding the recommended storage time period.

Precaution for Product Label

A two-dimensional barcode printed on ROHM Products label is for ROHM's internal use only.

Precaution for Disposition

When disposing Products please dispose them properly using an authorized industry waste company.

Precaution for Foreign Exchange and Foreign Trade act

Since concerned goods might be fallen under listed items of export control prescribed by Foreign exchange and Foreign trade act, please consult with ROHM in case of export.

Precaution Regarding Intellectual Property Rights

1. All information and data including but not limited to application example contained in this document is for reference only. ROHM does not warrant that foregoing information or data will not infringe any intellectual property rights or any other rights of any third party regarding such information or data.

2. ROHM shall not have any obligations where the claims, actions or demands arising from the combination of the Products with other articles such as components, circuits, systems or external equipment (including software).

3. No license, expressly or implied, is granted hereby under any intellectual property rights or other rights of ROHM or any third parties with respect to the Products or the information contained in this document. Provided, however, that ROHM will not assert its intellectual property rights or other rights against you or your customers to the extent necessary to manufacture or sell products containing the Products, subject to the terms and conditions herein.

Other Precaution

1. This document may not be reprinted or reproduced, in whole or in part, without prior written consent of ROHM.

2. The Products may not be disassembled, converted, modified, reproduced or otherwise changed without prior written consent of ROHM.

3. In no event shall you use in any way whatsoever the Products and the related technical information contained in the Products or this document for any military purposes, including but not limited to, the development of mass-destruction weapons.

4. The proper names of companies or products described in this document are trademarks or registered trademarks of ROHM, its affiliated companies or third parties.

© 2015 ROHM Co., Ltd. All rights reserved.

Downloaded from Arrow.com.

General Precaution

1. Before you use our Products, you are requested to carefully read this document and fully understand its contents. ROHM shall not be in any way responsible or liable for failure, malfunction or accident arising from the use of any ROHM's Products against warning, caution or note contained in this document.

2. All information contained in this document is current as of the issuing date and subject to change without any prior notice. Before purchasing or using ROHM's Products, please confirm the latest information with a ROHM sales representative.

3. The information contained in this document is provided on an "as is" basis and ROHM does not warrant that all information contained in this document is accurate and/or error-free. ROHM shall not be in any way responsible or liable for any damages, expenses or losses incurred by you or third parties resulting from inaccuracy or errors of or concerning such information.

© 2015 ROHM Co., Ltd. All rights reserved.

Downloaded from Arrow.com.