

DEUTSCH FAST Connectors

The Rugged, Versatile Production Break Connector According to EN3545

Downloaded from Arrow.com.

DEUTSCH FAST Connectors

According to EN3545 for Aircraft Interiors



ACCORDING TO

- EN3545
- ASNE 0390

VERSATILE

- Up to 78 contacts
- Various arrangements of size 22, 20, 16, and 8 contacts
- 36 keying possibilities

RUGGED

- Sealed and unsealed versions
- Wide temperature range

WEIGHT SAVING

- Copper contacts for arrangements 02 and 03
- Lightweight aluminum contacts for arrangements 01, 07, and 08
- Thermoplastic shell

DEUTSCH FAST connectors perform according to the EN3545 standard for rectangular connector systems widely used in aircraft interiors for signals and power.

Specifications

MATERIALS

- **Shell:** Thermoplastic
- **Contacts:** Copper alloy, plated gold over nickel

MECHANICAL/ENVIRONMENTAL

- **Durability:** 100 mating cycles
- **Operating Temperatures:** - 55°C to + 175°C
- **Damp Heat:** 56 days
- **Salt Mist Resistance:** 48 hours

ELECTRICAL

- **Withstanding Voltage at Sea Level:** 1500 Vrms
- **Insulation Resistance:** ≥ 5000 MΩ
- **Contact Maximum Current:**
  Size 22: 5 A
  Size 20: 7.5 A
  Size 16: 13 A
  K6: 60 A
- **Quadrax Impedance:** 100 Ohms

Overall dimensions and characteristics are given for indication guidance only.
TE Connectivity (TE) reserves the right to modify them for production improvement reasons.

TE Components . . . TE Technology . . . TE Know-how . . .
AMP | AGASTAT | CII | HARTMAN | KILOVAC | MICRODOT | NANONICS | POLAMCO | Raychem | Rochester | DEUTSCH
SEACON Phoenix | LL ROWE | Phoenix Optix | AFP | SEACON

Empower Engineers to Solve Problems, Moving the World Forward.

Downloaded from Arrow.com.

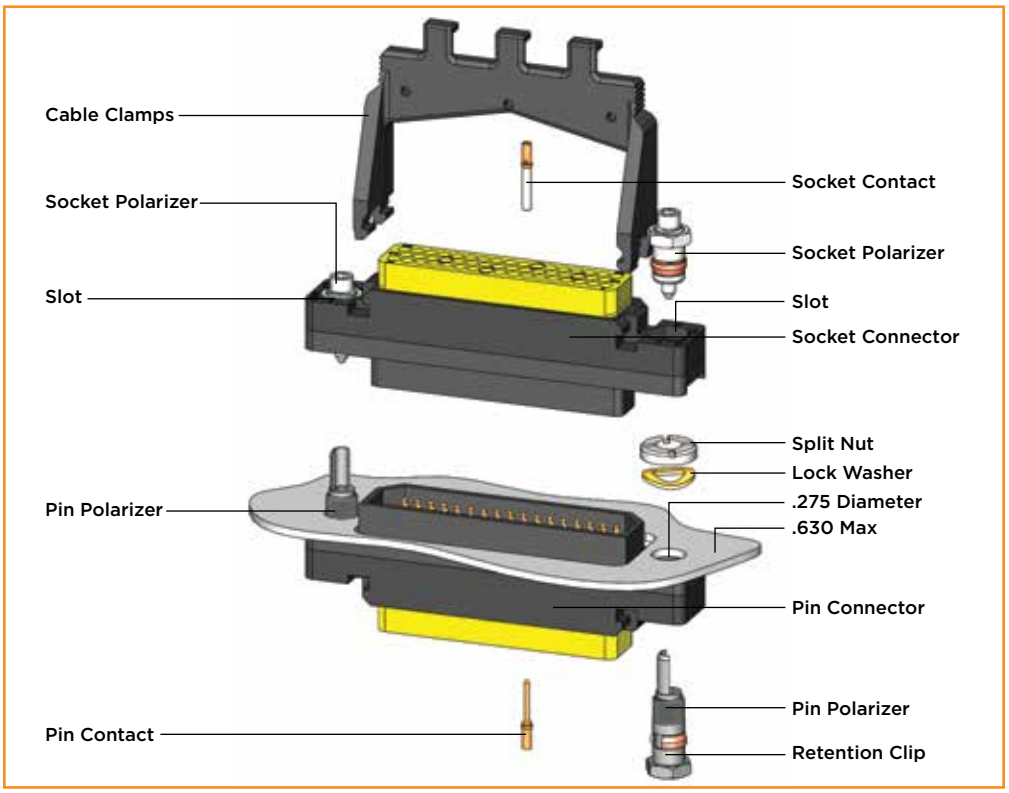

Part Numbering System

FAST EN3545 - D 01 M - X B 00 B

SHELL TYPE
- **D** Unsealed
- **E** Sealed

CONTACT ARRANGEMENT
- **01** 50 Size 20 Contacts
- **02** 78 Size 22 Contacts
- **03** 10 Size 16 Contacts and 39 Size 22 Contacts
- **07** 5 Size 8 Contacts or K6 or Quadrax
- **08** 3 Size 8 Contacts or K6 or Quadrax and 18 Size 20 Contacts

CONTACT TYPE
- **M** Male
- **F** Female

CONTACT TERMINATION
- **X** Crimp

CODING AND ATTACHMENT HARDWARE
- **A** Female Screw
- **B** Male Screw

KEYING
- **00** No Installed Keying

CONNECTOR DELIVERY STATE
- **A** Connector Delivered without Contacts
- **B** Connector Delivered with Enlarged Barrel Contacts Size 16/14 and 20/18 (see page 7)
- **D** Connector Delivered with Contacts (see page 7)

Arrangements 07 and 08 are always delivered without contacts.
For PCB versions, please contact TE.

Downloaded from Arrow.com.

Contact Arrangements

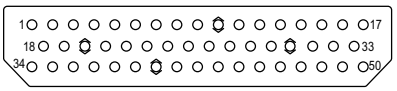

Arrangement 01
50 Size 20 Contacts

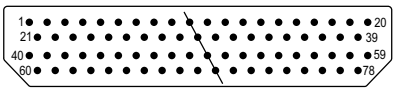

Arrangement 02
78 Size 22 Contacts

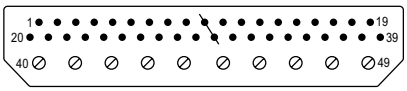

Arrangement 03
10 Size 16 Contacts
39 Size 22 Contacts

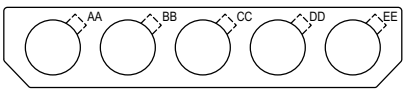

Arrangement 07
5 Size 8 Contacts

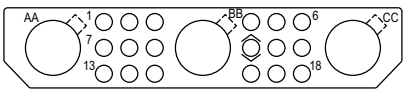

Arrangement 08
3 Size 8 Contacts
18 Size 20 Contacts

Unsealed version only available for arrangements 01, 02, and 03.

Shell Dimensions

Shells for Male Contacts

Contact Arrangement	A ±0.5	B ±0.5
01, 02, 03	19.50	26.30
07, 08	22.50	29.30

Sealed Version

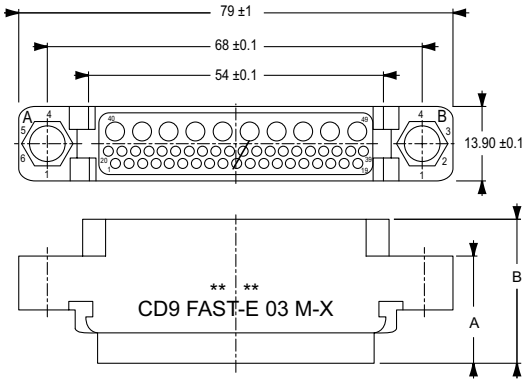

Unsealed Version

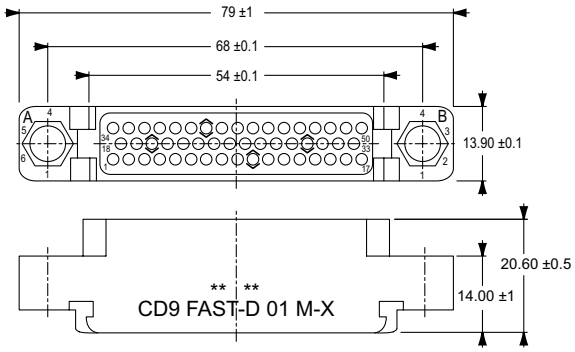

Shell Dimensions

Shells for Female Contacts

Contact Arrangement	A ±0.5	B ±0.5
01, 02, 03	19.50	26.00
07, 08	22.50	29.00

Sealed Version
(For All Contact Arrangements)

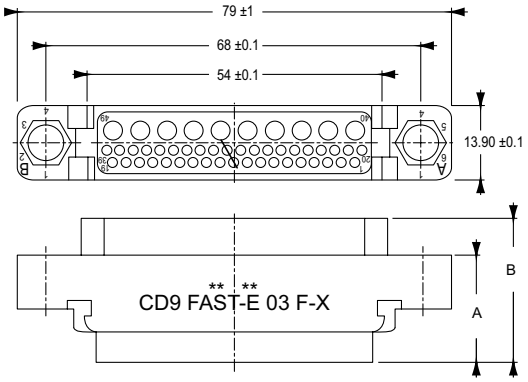

Unsealed Version
(For Contact Arrangements 01, 02, and 03 Only)

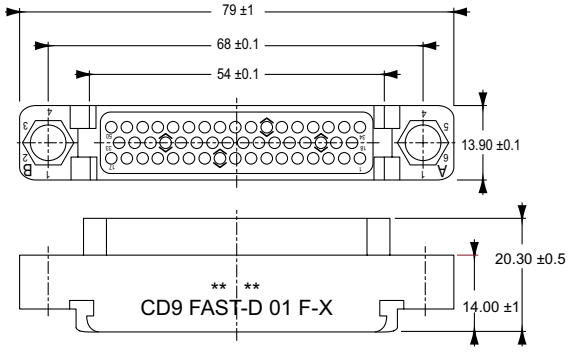

Downloaded from Arrow.com.

Flight Cap – Dummy Receptacle

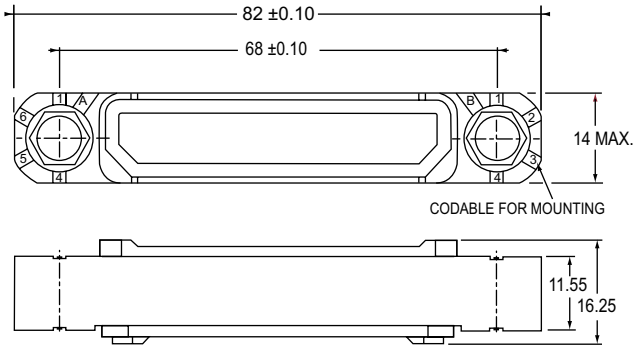

Flight caps/dummy receptacles are delivered with uncoded attachment systems. Coupling torques are identical to standard screw coupling.



Part No.		Universal Screw			Cable Fastening
TE	EN Standard	Body	Female	Male	
194-0159-00	EN3545-009C	1	—	—	1
194-0171-00	EN3545-009CR	1	—	2	—
194-0175-00	EN3545-009CPC	1	2	—	1
194-0176-00	EN3545-009CRC	1	—	2	1
194-0180-00*	—	1	2	2	

*Maintenance kit

Coding and Attachment System



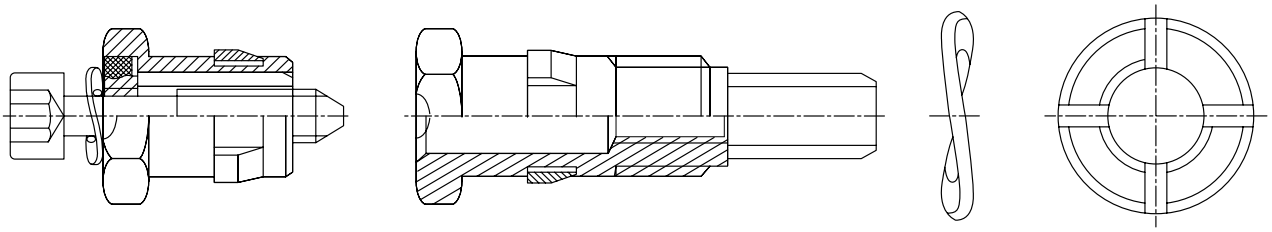

Screw Type	Part No.		Coupling Torque (daN.m)	
	TE	EN Standard		
Female	194-0034-00	EN3545-005A	0.06 to 0.10	To lock connector
Male	194-0036-00	EN3545-006B	0.125 to 0.150	For panel nut

Coupling Device Extraction Tool

Part No.: 057-0536-60

Panel Cutout Dimensions

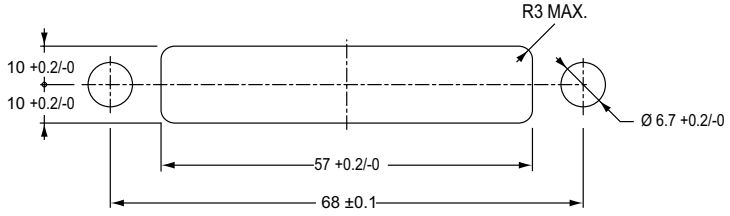

Maximum thickness of panel: 1.6 mm
Minimum pitch between connectors: 14.2 mm

Downloaded from Arrow.com.

Mating/Unmating Forces

(For connectors fully loaded with contacts)

Contact Arrangement	No. of Contacts	Mating/Unmating Force (N)	
		Minimum	Maximum
01	50	14.50	166
02	78	23.40	210
03	49	14.00	162
07	5	7.10	227
08	21	8.30	238

Accessories

Straight Cable Clamps





194-8018-00

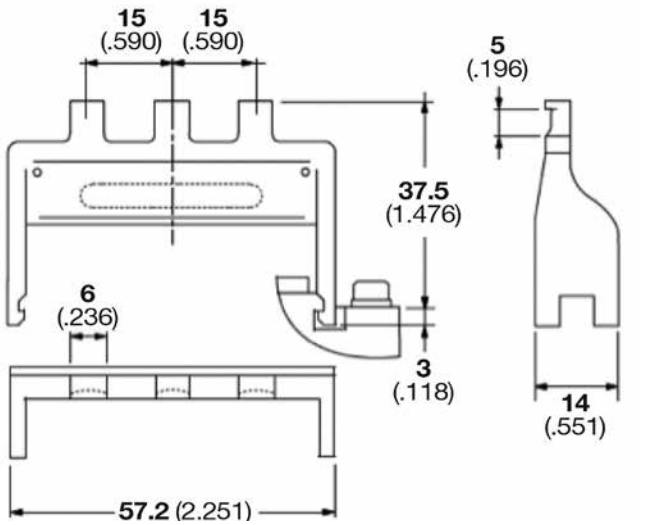

194-8002-00

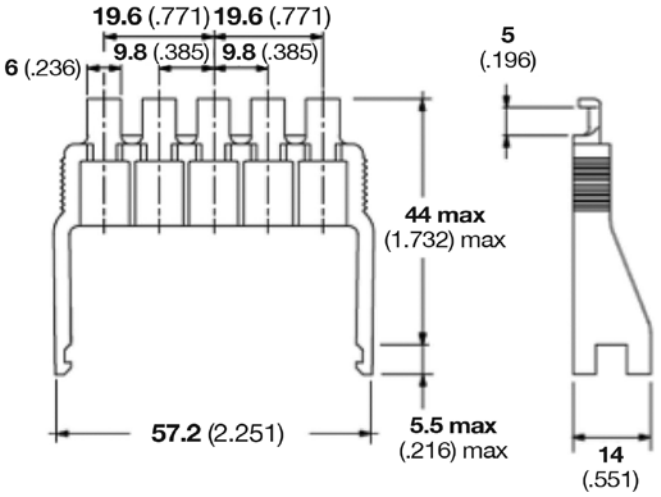

Contact Arrangement	Part No.	
	TE	EN Standard
01, 02, 03	194-8018-00	EN3545-007 SCD
07, 08	194-8002-00	EN3545-007 SCE

Downloaded from Arrow.com.

Contacts and Tooling

Contacts for Copper Cable

	Contacts				Cable			Tooling		
	Part No.		Type	Size	Conductor		Dia. Over Sheath (mm)	Crimp Tool	Positioner	Ins./Ext. Tool
	TE	EN Standard			mm²	AWG				
B Version	724-0001-22	EN3155-008M2222	Pin	22	0.15 to 0.40	26 to 22	0.75 to 1.27	M22520/2-01	M22520/2-09	M81969/14-01
	724-0003-22	EN3155-003F2222	Skt						M22520/2-06	M81969/14-01
	182-0120-20	EN3155-014M2018	Pin	20	0.25 to 1.0	24 to 18	0.85 to 1.80	M22520/2-01	M22520/2-08	M81969-39-01
	182-0118-20	EN3155-015F2018	Skt							
	724-1063-16	EN3155-008M1614	Pin	16	0.60 to 2.0	20 to 14	1.20 to 2.20	M22520/1-01	M22520/1-04	M81969/14-03
	724-1064-16	EN3155-003F1614	Skt							
D Version (FAST 03 Only)	724-0001-22	EN3155-008M2222	Pin	22	0.15 to 0.40	26 to 22	0.75 to 1.27	M22520/2-01	M22520/2-09	M81969/14-01
	724-0003-22	EN3155-003F2222	Skt						M22520/2-06	M81969/14-01
	724-0001-16	EN3155-008M1616	Pin	16	0.60 to 1.20	20 to 16	1.20 to 2.40	M22520/1-01	M22520/1-04	M81969-14-.3
	724-0003-16	EN3155-003F1616	Skt							

Quadrax Contacts

Size 8 Pin and Socket Contacts

Contacts		Tooling				
Kit Part No.	Type	Contact Crimp Tool	Contact Positioner	Sleeve Crimp Tool	Jaw	Extraction Tool
182-0611-08	Pin	M22520/2-01	K709	M22520/5-01	M22520/5-45B	025-0711-06
182-0612-08	Skt					

Solder Contacts

Size 8 Pin Contacts

Part No.: 187-0178-08

K6 Power Contacts for Copper Cable

For Size 8 Cavities in Arrangement 07 and 08

Kit Part No.			Type	Cable		
TE	Airbus			Conductor		Dia. Over Sheath (mm)
Kit	Contact	Sleeve		mm²	AWG	
182-0672-06	ABS1403-1K6KZ06	ABS0992 B 03	Pin	14	6	5.30 to 5.70
182-0704-06	ABS1344-1K6LZ06		Skt			
182-0672-08	ABS1403-1K6KZ08	ABS0992 B 01	Pin	9	8	4.10 to 4.70
182-0704-08	ABS1344-1K6LZ08		Skt			
182-0672-10	ABS1403-1K6KZ10	ABS0992 B 02	Pin	5 - 3	12 - 10	2.08 to 3.70
182-0704-10	ABS1344-1K6LZ10		Skt			

Filler Plug for K6 Cavities

Part No.: 182-8004-08 A



Tools

Part No.	Crimping Tool	Locator	Pilot Stop	PN Extractor	
				DEUTSCH	Normal
182-0672-06	M22520/23-01	WA23-296 L	M22520/23-03	025-0711-06	M81969/14-06
182-0706-06					
182-0672-08	M22520/23-01	WA23-296 L	M22520/23-02	025-0711-06	M81969/14-06
182-0706-08					
182-0672-10 / AWG 10	M22520/23-01	TP 1498 Position 3	WA23-101 DA	025-0711-06	M81969/14-06
182-0672-10 / AWG 12	M300BT	182-0118-20	Included in M300BT		
182-0706-10 / AWG 10	M22520/23-01	TP 1498 Position 3	WA23-101 DA	025-0711-06	M81969/14-06
182-0706-10 / AWG 12	M300BT	182-0118-20	Included in M300BT		

Downloaded from Arrow.com.

LET'S CONNECT

We make it easy to connect with our experts and are ready to provide all the support you need. Just call your local support number or visit www.te.com/industrial to chat with a Product Information Specialist.

Technical Support

te.com/support-center

North America	+1 800 522 6752	Asia Pacific	+86 400 820 6015
North America (Toll)	+1 717 986 7777	Japan	+81 044 844 8180
EMEA/South Africa	+800 0440 5100	Australia	+61 2 9554 2695
EMEA (Toll)	+31 73 624 6999	New Zealand	+64 (0) 9 634 4580
India (Toll-Free)	+800 440 5100		

te.com/FAST

AMP, AGASTAT, CII, DEUTSCH, HARTMAN, KILOVAC, LL ROWE, MICRODOT, NANONICS, POLAMCO, Raychem, SEACON, TE, TE Connectivity and the TE connectivity (logo) are trademarks of the TE Connectivity Corporation. Other products, logos, and company names mentioned herein may be trademarks of their respective owners.

While TE Connectivity (TE) has made every reasonable effort to ensure the accuracy of the information herein, nothing herein constitutes any guarantee that such information is error-free, or any other representation, warranty or guarantee that the information is accurate, correct, reliable or current. The TE entity issuing this publication reserves the right to make any adjustments to the information contained herein at any time without notice. All implied warranties regarding the information contained herein, including, but not limited to, any implied warranties of merchantability or fitness for a particular purpose are expressly disclaimed. The dimensions herein are for reference purposes only and are subject to change without notice. Specifications are subject to change without notice.

Consult TE for the latest dimensions and design specifications.

© 2017 TE Connectivity Corporation All Rights Reserved.

1-1773915-5 03/17

Downloaded from Arrow.com.