Panasonic INDUSTRY

⚠ Some part numbers are not a recommended product.
Not recommended for new design.

OS-CON

Conductive Polymer Aluminum Solid Capacitors

Surface Mount Type

SVPC series



Features

- Low ESR (9 mΩ max.)
- Large capacitance (2700 µF max.)
- RoHS compliance, Halogen free

Specifications

Size code	B6	C6	E7	E12	F12
Category temp. range	–55 ℃ to +105 ℃				
Rated voltage range	2.5 V to 16 V				2.5 V
Nominal cap.range	39 µF to 180 µF	68 µF to 560 µF	120 µF to 680 µF	270 µF to 1500 µF	2700 µF
Capacitance tolerance	±20 % (120 Hz / +20 ℃)				
DC leakage current	Please see the attached characteristics list				
Dissipation factor (tan δ)	Please see the attached characteristics list				
Endurance	+105 ℃ 2000 h, rated voltage applied				
	Capacitance change	Within ±20 % of the initial value			
	Dissipation factor (tanδ)	≦ 150 % of the initial limit			
	DC leakage current	Within the initial limit			
Damp heat (Steady state)	+60 ℃, 90 % to 95 % RH, 1000 h, No-applied voltage				
	Capacitance change	Within ±20 % of the initial value			
	Dissipation factor (tanδ)	≦ 150 % of the initial limit			
	DC leakage current	Within the initial limit (after voltage processing)			

Marking

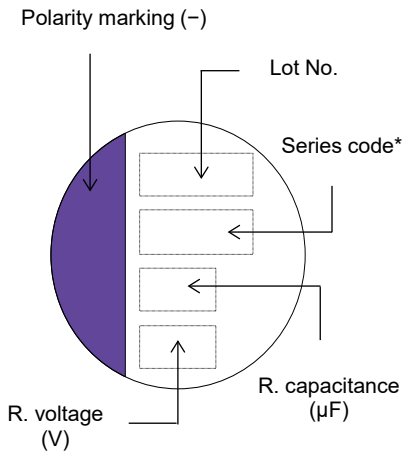

* Depends on the case size.

Dimensions (not to scale)

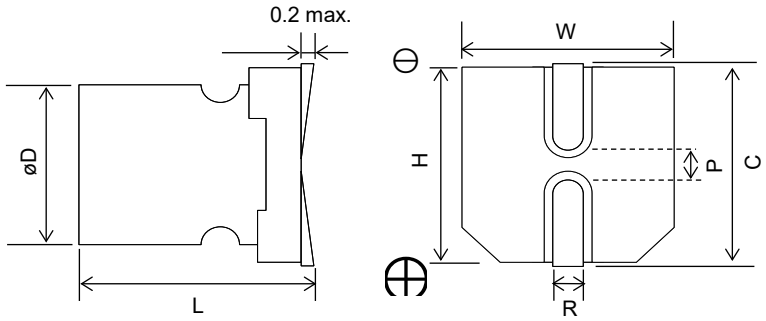

Unit : mm

Size code	øD±0.5	L +0.1 -0.4	W±0.2	H±0.2	C±0.2	R	P*1
B6	5.0	5.9	5.3	5.3	6.0	0.6 to 0.8	1.4
C6	6.3	5.9	6.6	6.6	7.3	0.6 to 0.8	2.1
E7	8.0	6.9	8.3	8.3	9.0	0.6 to 0.8	3.2
E12	8.0	11.9	8.3	8.3	9.0	0.8 to 1.0	3.2
F12	10.0	12.6	10.3	10.3	11.0	0.8 to 1.0	4.6

*1 : Reference

Design and specifications are each subject to change without notice. Ask factory for the current technical specifications before purchase and/or use.
Should a safety concern arise regarding this product, please be sure to contact us immediately.

Characteristics list

Rated voltage (V)	Rated capacitance (±20 %) (μF)	Case size (mm)		Size code	Specifications					Standard (Reel size : ø380)	
		øD	L		Ripple current*1 (mA rms)	ESR (mΩ max.) 100 kHz / 20 °C	ESR (mΩ max.) 300 kHz*2 / 20 °C	tan δ*3	LC*4 (μA)	Part number	Min. Packaging Q'ty (pcs)
2.5	180	5.0	5.9	B6	1970	30	26	0.12	300	2R5SVPC180M	1500
		5.0	5.9		2200	24	20	0.12	300	2R5SVPC180MY	1500
		5.0	5.9		2800	19	16	0.12	300	2R5SVPC180MV	1500
	390	6.3	5.9	C6	2410	25	22	0.12	300	2R5SVPC390M	1000
		6.3	5.9		3160	15	13	0.12	300	2R5SVPC390MV	1000
	560	6.3	5.9		3500	16	14	0.12	300	2R5SVPC560M	1000
	680	8.0	6.9	E7	3370	20	17	0.12	500	2R5SVPC680M	1000
	820	8.0	11.9	E12	5380	9	8	0.15	500	2R5SVPC820M	400
	1500	8.0	11.9		5150	10	9	0.15	750	2R5SVPC1500M	400
	2700	10.0	12.6	F12	5070	12	10	0.15	1350	2R5SVPC2700M	400
4.0	150	5.0	5.9	B6	1970	30	26	0.12	300	4SVPC150M	1500
		5.0	5.9		2240	23	20	0.12	300	4SVPC150MY	1500
		5.0	5.9		2730	20	17	0.12	300	4SVPC150MV	1500
	330	6.3	5.9	C6	2320	27	23	0.12	300	4SVPC330M	1000
		6.3	5.9		2630	21	18	0.12	300	4SVPC330MY	1000
		6.3	5.9		3160	15	13	0.12	300	4SVPC330MV	1000
	560	8.0	6.9	E7	3220	22	19	0.12	500	4SVPC560M	1000
		8.0	11.9	E12	5380	9	8	0.15	500	4SVPC560MX	400
	1200	8.0	11.9		4700	12	10	0.15	960	4SVPC1200M	400
	1500	8.0	11.9		4700	12	10	0.15	1200	4SVPC1500M	400
6.3	100	5.0	5.9	B6	1970	30	26	0.12	300	6SVPC100M	1500
		5.0	5.9		2150	25	21	0.12	300	6SVPC100MY	1500
	120	5.0	5.9		2660	21	18	0.12	300	6SVPC120MV	1500
	220	6.3	5.9	C6	2320	27	23	0.12	300	6SVPC220M	1000
		6.3	5.9		3160	15	13	0.12	300	6SVPC220MV	1000
	330	6.3	5.9		3390	17	15	0.12	415	6SVPC330M	1000
	390	8.0	6.9	E7	3220	22	19	0.12	491	6SVPC390M	1000
	820	8.0	11.9	E12	4700	12	10	0.15	1033	6SVPC820M	400
10	68	5.0	5.9	B6	1970	30	26	0.12	300	10SVPC68M	1500
		5.0	5.9		2540	23	20	0.12	300	10SVPC68MV	1500
	120	6.3	5.9	C6	2320	27	23	0.12	300	10SVPC120M	1000
		6.3	5.9		2600	22	19	0.12	300	10SVPC120MV	1000
	270	8.0	6.9	E7	3220	22	19	0.12	500	10SVPC270M	1000
	NRFND 330	8.0	6.9		3460	19	17	0.12	660	10SVPC330M	1000
16	39	5.0	5.9	B6	1820	35	30	0.12	300	16SVPC39M	1500
		5.0	5.9		2350	27	23	0.12	300	16SVPC39MV	1500
	68	6.3	5.9	C6	2200	30	26	0.12	300	16SVPC68M	1000
		6.3	5.9		2440	25	22	0.12	300	16SVPC68MV	1000
	100	6.3	5.9		2490	24	23	0.12	300	16SVPC100M	1000
	120	8.0	6.9	E7	2900	27	23	0.12	500	16SVPC120M	1000
	NRFND 150	8.0	6.9		3220	22	21	0.12	500	16SVPC150M	1000
	270	8.0	11.9	E12	4070	16	14	0.15	864	16SVPC270M	400

*1: Ripple current (100 kHz / +105 °C) *2: Reference value at 300 kHz *3: tan δ (120 Hz / +20 °C) *4: After 2 minutes

◆ Please refer to each page in this catarog for “Reflow conditions” and “Taping specifications”.

NRFND Not recommended for new design

Frequency correction factor for ripple current

Frequency(f)	120 Hz ≤ f < 1 kHz	1 kHz ≤ f < 10 kHz	10 kHz ≤ f < 100 kHz	100 kHz ≤ f < 500 kHz
Coefficient	0.05	0.3	0.7	1

Design and specifications are each subject to change without notice. Ask factory for the current technical specifications before purchase and/or use.
Should a safety concern arise regarding this product, please be sure to contact us immediately.

Safety and Legal Matters to Be Observed

Product specifications and applications

■ Please be advised that this product and product specifications are subject to change without notice for improvement purposes. Therefore, please request and confirm the latest delivery specifications that explain the specifications in detail before the final design, or purchase or use of the product, regardless of the application. In addition, do not use this product in any way that deviates from the contents of the company's delivery specifications.

■ Unless otherwise specified in this catalog or the product specifications, this product is intended for use in general electronic equipment (AV products, home appliances, commercial equipment, office equipment, information and communication equipment, etc.).
When this product is used for the following special cases, the specification document suited to each application shall be signed/sealed (with Panasonic Industry and the user) in advance..These include applications requiring special quality and reliability, wherein their failures or malfunctions may directly threaten human life or cause harm to the human body (e.g.: space/aircraft equipment, transportation/traffic equipment, combustion equipment, medical equipment, disaster prevention/crime prevention equipment, safety equipment, etc.).

Safety design and product evaluation

■ Please ensure safety through protection circuits, redundant circuits, etc., in the customer's system design so that a defect in our company's product will not endanger human life or cause other serious damage.

■ This catalog shows the quality and performance of individual parts. The durability of parts varies depending on the usage environment and conditions. Therefore, please ensure to evaluate and confirm the state of each part after it has been mounted in your product in the actual operating environment before use.
If you have any doubts about the safety of this product, then please notify us immediately, and be sure to conduct a technical review including the above protection circuits and redundant circuits at your company.

Laws / Regulations / Intellectual property

■ The transportation of dangerous goods as designated by UN numbers, UN classifications, etc., does not apply to this product. In addition, when exporting products, product specifications, and technical information described in this catalog, please comply with the laws and regulations of the countries to which the products are exported, especially those concerning security export control.

■ Each model of this product complies with the RoHS Directive (Restriction of the use of hazardous substances in electrical and electronic equipment) (2011/65/EU and (EU) 2015/863). The date of compliance with the RoHS Directive and REACH Regulation varies depending on the product model.
Further, if you are using product models in stock and are not sure whether or not they comply with the RoHS Directive or REACH Regulation, please contact us by selecting "Sales Inquiry" from the inquiry form.

■ During the manufacturing process of this product and any of its components and materials to be used, Panasonic Industry does not intentionally use ozone-depleting substances stipulated in the Montreal Protocol and specific bromine-based flame retardants such as PBBs (Poly-Brominated Biphenyls) / PBDEs (Poly-Brominated Diphenyl Ethers). In addition, the materials used in this product are all listed as existing chemical substances based on the Act on the Regulation of Manufacture and Evaluation of Chemical Substances.

■ With regard to the disposal of this product, please confirm the disposal method in each country and region where it is incorporated into your company's product and used.

■ The technical information contained in this catalog is intended to show only typical operation and application circuit examples of this product. This catalog does not guarantee that such information does not infringe upon the intellectual property rights of Panasonic Industry or any third party, nor imply that the license of such rights has been granted.

■ Design, materials, or process related to technical owned by Panasonic Industry are subject to change without notice.

Panasonic Industry will assume no liability whatsoever if the use of our company's products deviates from the contents of this catalog or does not comply with the precautions. Please be advised of these restrictions.

Matters to Be Observed When Using This Product
(Conductive Polymer Aluminum Solid Capacitors / OS-CON)

Use environments and cleaning conditions

■ This product (capacitor) is intended for standard general-purpose use in electronic equipment, and is not designed for use in the specific environments described below. Using the product in such specific environments or service conditions, therefore, may affect the performance of the product.
Please check with us about the performance and reliability of the product first before using the product.

(1) Used in liquid, such as water, oil, chemicals, and organic solvents.
(2) Used in a place exposed to direct sunlight, an outdoor place with no shielding, or a dusty place.
(3) Used in a wet place (dew concentration on a resistor, water leakage, etc.), a place exposed to sea breeze, or a place filled with a corrosive gas, such as Cl_2, H_2S, NH_3, SO_2, or NO_X.
(4) Used in an environment where static electricity and electromagnetic waves are strong.
(5) The product is located close to a heating component or a flammable material, such as a vinyl cable, is placed near the product.
(6) The product is used sealed with a resin, etc.
(7) Solder flux of the soldered product is cleansed with a solvent, water, and a water-soluble cleaner. (Be careful with water soluble solder flux.)
(8) Used in an environment where an acidic or alkali atmosphere is present.
(9) Used in an environment where excessive vibration or impact is applied to the product.
(10) Used under a low atmospheric pressure condition or depressurized condition.

■ Cleaning can be performed with cleaning agents, including higher-grade alcohol-based cleaning solutions such as Pine Alpha ST-100S, Cleanthru 750H, 750L, 710M, 750K, Techno Care FRW14-17, CFC substitutes such as AK-225AES, and IPA. Please confirm the following precautions before cleaning.

(1) Use an immersion, ultrasonic wave, or other cleaning method, and the cleaning time should not exceed 2 minutes.
(2) The temperature of the cleaning solution should be less than or equal to 60 °C.
(3) Control contamination of cleaning agents (conductivity, pH, specific gravity, water content, etc.).
(4) After cleaning, do not store the product in the atmosphere of the cleaning solution or in an airtight container.
(5) When drying the circuit board or this product, use hot air below the upper limit temperature of their category.
(6) Please be mindful that rubbing the printed surface of this product after cleaning may erase the markings depending on the cleaning agent used.
(7) Please contact us separately for details on cleaning agents, cleaning methods, etc., and for cleaning solutions other than those listed above.

■ Fixing agents and coating agents

(1) Select appropriate materials for the outer packaging and sealing materials of this product. Do not use acetone, especially in fixing agents, coating agents, or diluents.
(2) When using a fixing agent or coating agent, ensure that no flux residue or contamination remains between the circuit board and the sealing area of this product.
(3) Allow cleaning agents, etc. to dry before using fixing agents or coating agents.
(4) Please contact us for thermal curing conditions for fixing agents or coating agents.

■ When the capacitor is used in a circuit where an impact voltage is applied or a high voltage is applied in a short period (transient phenomenon) or a high pulse voltage is applied, make sure to use the capacitor at a voltage equal to or lower than its rated voltage.

Response to anomalies and handling conditions

■ The main failure mode is a short-circuit mode caused mainly by thermal stress, electrical stress, and mechanical stress due to soldering and operating temperature environments. To prevent the occurrence of short circuits, the following measures should be adequately taken to ensure safety.

(1) If odorous gases are generated, then turn off the main power of the set equipment and stop using it. In this case, keep your face and hands away from the equipment.
(2) Depending on conditions, it may take several seconds to several minutes before odorous gases are generated. When using a protection circuit, design it so that it operates during this period.
(3) If odorous gases get into your eyes or are inhaled, immediately wash your eyes with water or gargle.
(4) Do not lick the electrolyte of the product. If the electrolyte gets on your skin, then wash it off with soap.
(5) When a current value after the short of the product is extremely large, the shorted capacitor may spark out, which, in the worst scenario, may result in ignition. Ensure the safety of the circuit by, for example, giving it a redundant circuit structure or providing it with a protective circuit.

Reliability and product life

The failure rate of the capacitor is specified based on 0.5%*/1000 h (reliability level 60%), a failure rate conforming to JIS C 5003 (failure rate level). This indicates that the possibility of occurrence of a failure is by no means zero.
One of the failure modes is a wear out failure. This happens when the period of guaranteeing the durability and high-temperature/high-humidity resistance of the capacitor is over, changes in the electrical characteristics of the capacitor (product) get larger and its electrolyte gradually deteriorates into an insulating material to create an open mode.
Another failure mode is a random failure in which a short mode results mainly because of thermal, electrical, or mechanical stress, etc.

Circuit design and circuit board design

■ Due to reasons such as increased leakage currents, do not use this product in high impedance circuits, coupling circuits, time constant circuits, and circuits that are significantly affected by leakage currents.

■ During circuit design, be mindful that the electrical characteristics of this product, such as capacitance and ESR, may fluctuate within the specified ranges even under conditions that meet the rated electrical and mechanical performance.

■ Leakage currents may increase due to mechanical and thermal stress (soldering, high-temperature no-load test, etc.). However, when the voltage (lower than or equal to the category voltage and upper limit temperature) is applied, leakage currents gradually decrease due to the self-recovery function.

■ If an excessive rush current flows due to rapid charging and discharging, then it may lead to short circuits and increased leakage currents. Therefore, apply a protection circuit to this product if the rush current value flowing through it is as follows.

(1) When a rush current of 10 A or more flows through a product whose tenfold allowable ripple current is less than 10 A.
(2) With regard to a product whose tenfold allowable ripple current is 10 A or more, when a rush current exceeding the tenfold value flows through the product.

■ The resin on the surface of the case does not guarantee insulation. In addition, there is an indefinite resistance between the case and the cathode terminal, and they are not insulated. Therefore, completely isolate the case from the cathode terminal, anode terminal, and circuit pattern.

Mounting and storage conditions

■ Soldering with a soldering iron

(1) Since the lead wire pitch dimension of the radial lead type capacitor and the printed circuit board hole pitch dimension do not match, when processing the lead wires, do not apply stress to the body before soldering.
(2) When soldering, do not apply excessive stress to the body of this product.
(3) Once the product has been soldered, when using a soldering iron to remove it, remove it after the solder has completely melted so as not to apply stress to the electrode terminals of the product.
(4) Do not allow the tip of the soldering iron to touch the body of this product.

■ Flow soldering

(1) Do not apply flow soldering to the surface mount type model of this product.
(2) Do not solder this product by immersing its body in molten solder.
(3) Solder only on the opposite side of the circuit board surface where this product is mounted.
(4) Do not allow flux to adhere to parts other than the electrode terminals.
(5) Do not allow other parts to fall over and come into contact with this product during soldering.

■ Reflow soldering

(1) Do not apply reflow soldering to the radial lead type model of this product.
(2) Please contact us separately for soldering conditions for using the VPS method.

■ Handling after soldering

Observe the following precautions to avoid applying excessive stress on this product.

(1) Do not tilt, knock over, or twist this product.
(2) Do not move the circuit board by grabbing this product.
(3) Do not hit this product with objects.
(4) When stacking circuit boards, do not allow circuit boards or other parts to come in contact with this product.

■ It is recommended that all components in the bag be used up by opening the bag immediately before use. However, if the remaining components are to be stored after opening the bag, please use them up within the following specified period* to maintain good solderability.

* The surface mount type does not comply with the JEDEC J-STD-020 specification.

(1) Surface mount type	: Within 24 months after shipment (before opening) and within 30 days after opening (packaged with carrier tape)
(2) Radial lead type (bagged product)	: Within 30 months after shipment (before opening) and within 7 days after opening
(3) Radial lead type (taped product)	: Within 24 months after shipment (before opening) and within 7 days after opening

Reference information

Intellectual property

Panasonic Group provides customers with safe products and services. We are also making great efforts to protect our intellectual property rights for Panasonic Group products. Typical patents related to this product are as follows.

＊No target