MOSFET – N-Channel, POWERTRENCH®, Logic Level

FDN359AN

SOT−23
CASE 527AG

General Description

This N−Channel Logic Level MOSFET is produced using **onsemi**'s advanced POWERTRENCH process that has been especially tailored to minimize the on−state resistance and yet maintain superior switching performance.

These devices are well suited for low voltage and battery powered applications where low in−line power loss and fast switching are required.

Features

- 2.7 A, 30 V
  - $R_{DS(ON)}$ = 0.046 Ω @ V_{GS} = 10 V
  - $R_{DS(ON)}$ = 0.060 Ω @ V_{GS} = 4.5 V
- Very Fast Switching
- Low Gate Charge (5 nC Typical)
- High Power Version of Industry Standard SOT−23 Package. Identical Pin out to SOT−23 with 30% Higher Power Handling Capability

MARKING DIAGRAM

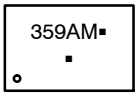

359A = Specific Device Code
M = Date Code
▪ = Pb−Free Package

(Note: Microdot may be in either location)

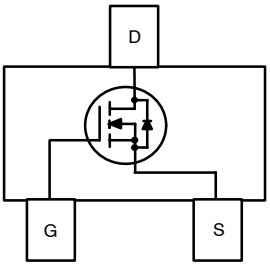

ORDERING INFORMATION

Device	Package	Shipping†
FDN359AN	SOT−23 (Pb-Free, Halide Free)	3000 / Tape & Reel

†For information on tape and reel specifications, including part orientation and tape sizes, please refer to our Tape and Reel Packaging Specification Brochure, BRD8011/D.

ABSOLUTE MAXIMUM RATINGS

(T_A = 25°C unless otherwise noted)

Symbol	Parameter	Ratings	Unit
V_{DSS}	Drain−Source Voltage	30	V
V_{GSS}	Gate−Source Voltage	±20	V
I_D	Drain Current Continuous (Note 1a) Pulsed	 2.7 15	A
P_D	Power Dissipation for Single Operation (Note 1a) (Note 1b)	 0.5 0.46	W
T_J, T_{STG}	Operating and Storage Junction Temperature Range	−55 to +150	°C

Stresses exceeding those listed in the Maximum Ratings table may damage the device. If any of these limits are exceeded, device functionality should not be assumed, damage may occur and reliability may be affected.

THERMAL CHARACTERISTICS

Symbol	Parameter	Ratings	Unit
$R_{\theta JA}$	Thermal Resistance, Junction−to−Ambient (Note 1a)	250	°C/W
$R_{\theta JC}$	Thermal Resistance, Junction−to−Case (Note 1)	75	°C/W

© Semiconductor Components Industries, LLC, 1999

Downloaded from Arrow.com.

ELECTRICAL CHARACTERISTICS (T_A = 25°C unless otherwise noted)

Symbol	Parameter	Test Conditions	Min	Typ	Max	Unit
OFF CHARACTERISTICS						
BV_{DSS}	Drain−Source Breakdown Voltage	V_{GS} = 0 V, I_D = 250 μA	30	–	–	V
$\frac{\Delta BV_{DSS}}{\Delta T_J}$	Breakdown Voltage Temperature Coefficient	I_D = 250 μA, Referenced to 25°C	–	23	–	mV/°C
I_{DSS}	Zero Gate Voltage Drain Current	V_{DS} = 24 V, V_{GS} = 0 V	–	–	1	μA
		V_{DS} = 24 V, V_{GS} = 0 V ,T_J = 55°C	–	–	10	
I_{GSSF}	Gate−Body Leakage, Forward	V_{GS} = 20 V, V_{DS} = 0 V	–	–	100	nA
I_{GSSR}	Gate−Body Leakage, Reverse	V_{GS} = −20 V, V_{DS} = 0 V	–	–	−100	nA
ON CHARACTERISTICS (Note 2)						
$V_{GS(th)}$	Gate Threshold Voltage	V_{DS} = V_{GS}, I_D = 250 μA	1	1.6	3	V
$\frac{\Delta V_{GS(th)}}{\Delta T_J}$	Gate Threshold Voltage Temperature Coefficient	I_D = 250 μA, Referenced to 25°C	–	−4	–	mV/°C
$R_{DS(on)}$	Static Drain−Source On−Resistance	V_{GS} = 10 V, I_D = 2.7 A	–	0.037	0.046	Ω
		V_{GS} = 10 V, I_D = 2.7 A ,T_J = 125°C	–	0.055	0.075	
		V_{GS} = 4.5 V, I_D = 2.4 A	–	0.049	0.06	
$I_{D(on)}$	On−State Drain Current	V_{GS} = 10 V, V_{DS} = 5 V	15	–	–	A
g_{FS}	Forward Transconductance	V_{DS} = 5 V, I_D = 2.7 A	–	9.5	–	S
DYNAMIC CHARACTERISTICS						
C_{iss}	Input Capacitance	V_{DS} = 10 V, V_{GS} = 0 V, f = 1.0 MHz	–	480	–	pF
C_{oss}	Output Capacitance		–	120	–	pF
C_{rss}	Reverse Transfer Capacitance		–	45	–	pF
SWITCHING CHARACTERISTICS (Note 2)						
$t_{d(on)}$	Turn−On Delay Time	V_{DD} = 5 V, I_D = 1 A, V_{GS} = 4.5 V, R_{GEN} = 6 Ω	–	6	12	ns
t_r	Turn−On Rise Time		–	13	24	ns
$t_{d(off)}$	Turn−Off Delay Time		–	15	27	ns
t_f	Turn−Off Fall Time		–	4	10	ns
Q_g	Total Gate Charge	V_{DS} = 10 V, I_D = 2.7 A, V_{GS} = 5 V	–	5	7	nC
Q_{gs}	Gate−Source Charge		–	1.4	–	nC
Q_{gd}	Gate−Drain Charge		–	1.6	–	nC
DRAIN−SOURCE DIODE CHARACTERISTICS AND MAXIMUM RATINGS						
I_S	Maximum Continuous Drain−Source Diode Forward Current		–	–	0.42	A
V_{SD}	Drain−Source Diode Forward Voltage	V_{GS} = 0 V, I_S = 0.42 A (Note 2)	–	0.65	1.2	V

Product parametric performance is indicated in the Electrical Characteristics for the listed test conditions, unless otherwise noted. Product performance may not be indicated by the Electrical Characteristics if operated under different conditions.

NOTES:

1. $R_{\theta JA}$ is the sum of the junction−to−case and case−to−ambient thermal resistance where the case thermal reference is defined as the solder mounting surface of the drain pins. $R_{\theta JC}$ is guaranteed by design while $R_{\theta CA}$ is determined by the user's board design.
   Typical $R_{\theta JA}$ using the board layouts shown below on FR−4 PCB in a still air environment

a) 250°C/W when mounted on a 0.02 in^2 pad of 2 oz copper

b) 270°C/W when mounted on a minimum pad

Scale 1:1 on letter size paper

2. Pulse Test: Pulse Width ≤ 300 μs, Duty Cycle ≤ 2.0%.

Downloaded from Arrow.com.

TYPICAL CHARACTERISTICS

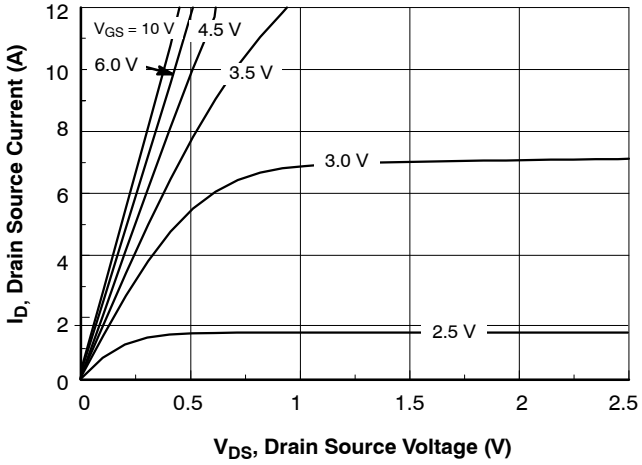

Figure 1. On−Region Characteristics

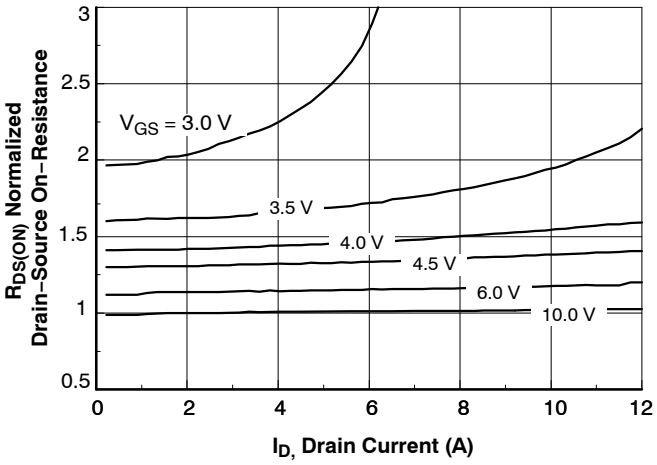

Figure 2. On−Resistance Variation with Drain Current and Gate Voltage

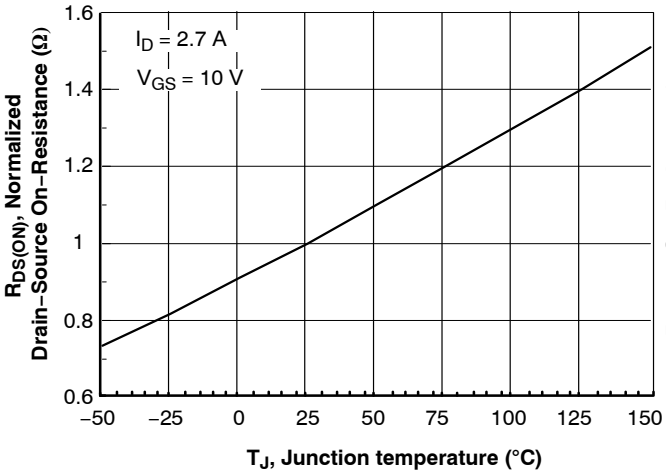

Figure 3. On−Resistance Variation with Temperature

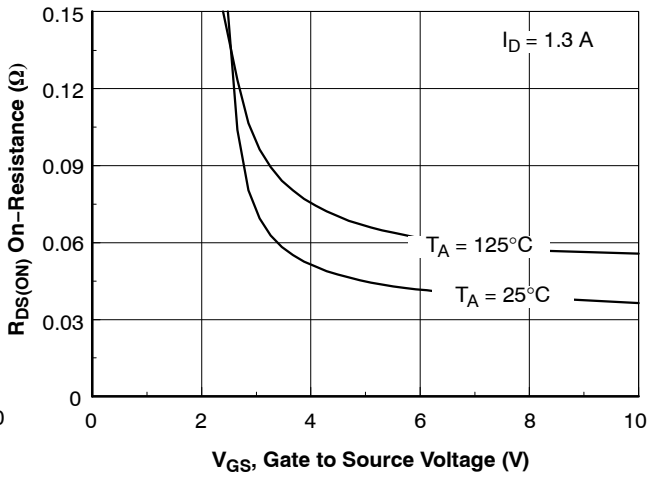

Figure 4. On−Resistance Variation with Gate−to−Source Voltage

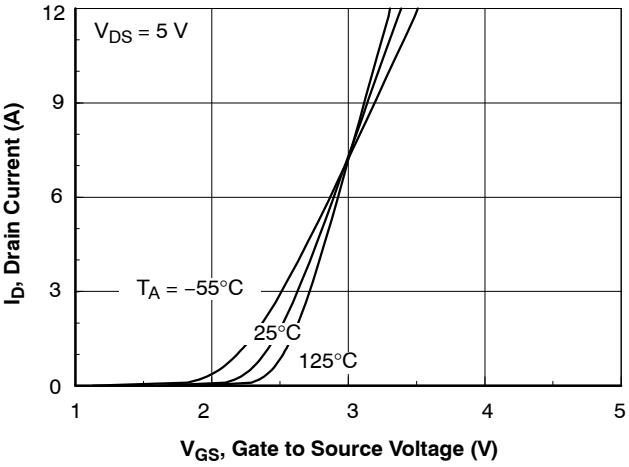

Figure 5. Transfer Characteristics

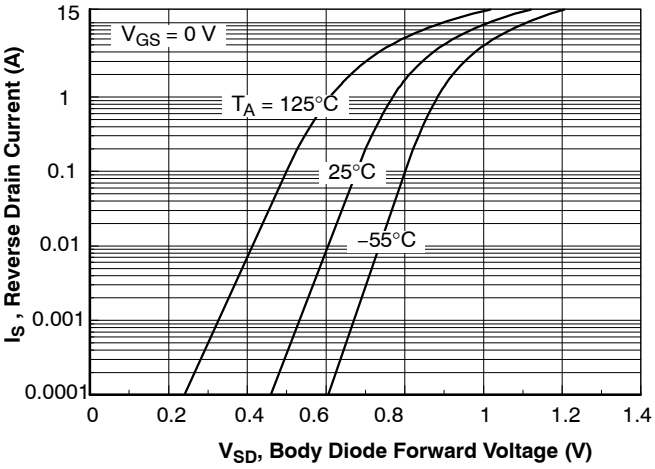

Figure 6. Body Diode Forward Voltage Variation with Source Current and Temperature

Downloaded from Arrow.com.

TYPICAL CHARACTERISTICS (CONTINUED)

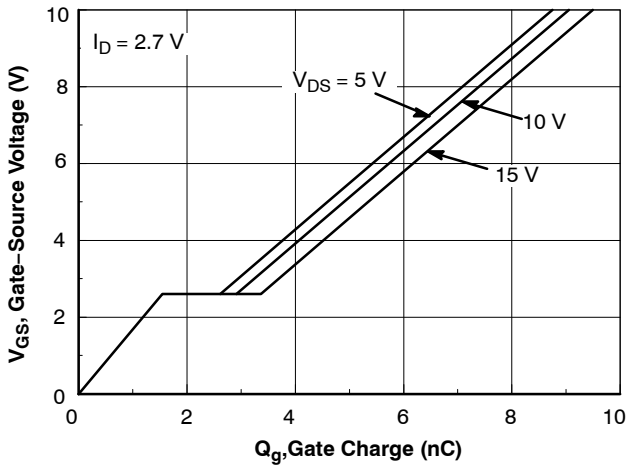

Figure 7. Gate Charge Characteristics

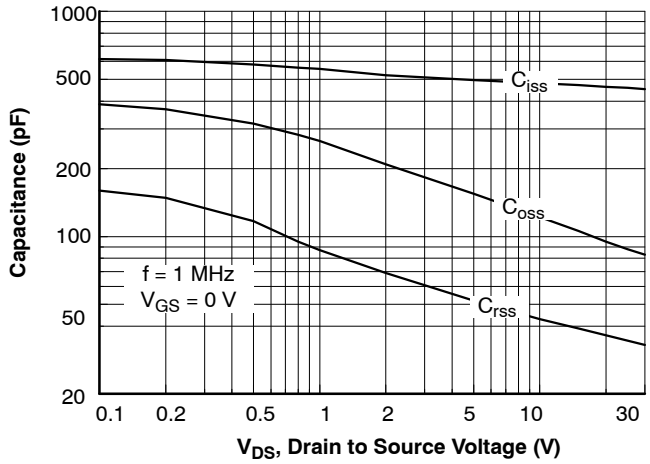

Figure 8. Capacitance Characteristics

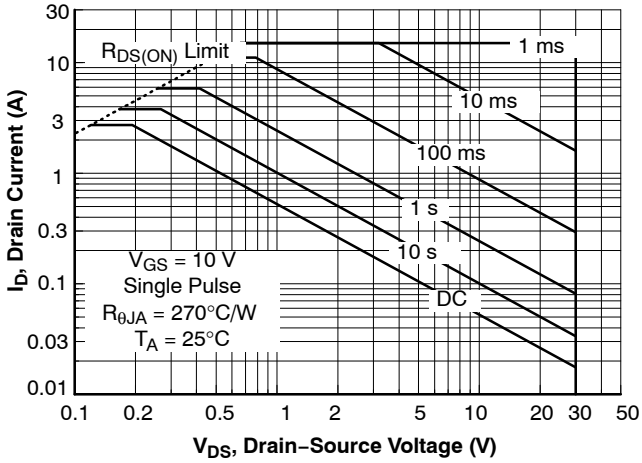

Figure 9. Maximum Safe Operating Area

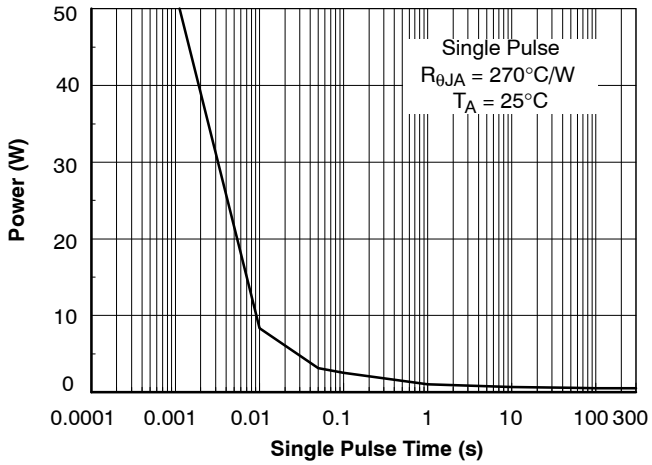

Figure 10. Single Pulse Maximum Power Dissipation

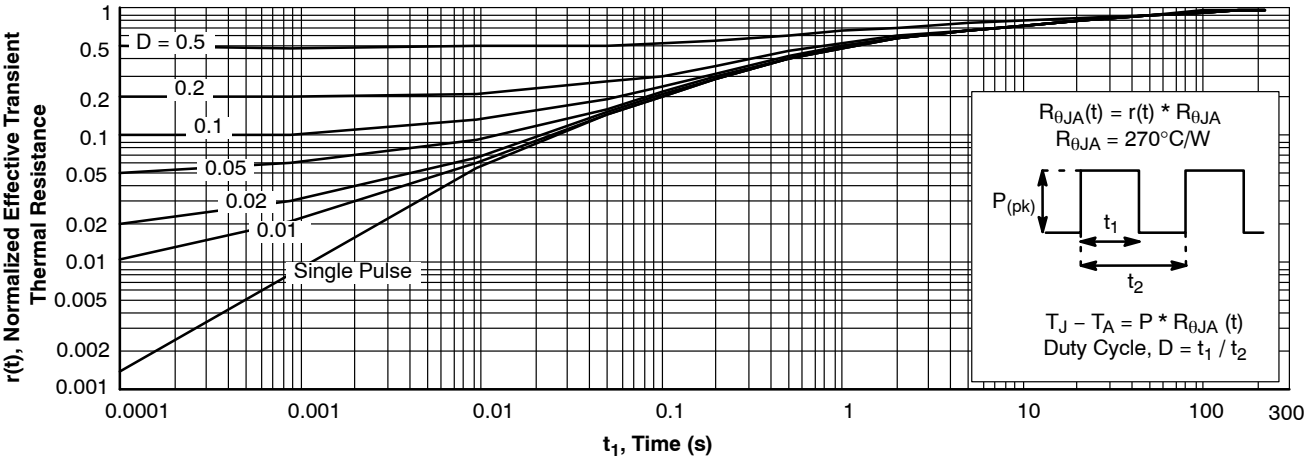

Figure 11. Transient Thermal Response Curve

Thermal characterization performed using the conditions described in Note 1b.
Transient thermal response will change depending on the circuit board design.

POWERTRENCH is a registered trademark of Semiconductor Components Industries, LLC dba "**onsemi**" or its affiliates and/or subsidiaries in the United States and/or other countries.

Downloaded from Arrow.com.

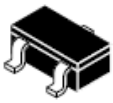

SOT−23/SUPERSOT™ −23, 3 LEAD, 1.4x2.9
CASE 527AG
ISSUE A

DATE 09 DEC 2019

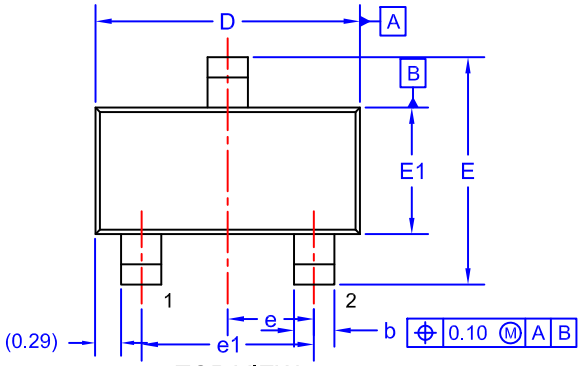

TOP VIEW

NOTES: UNLESS OTHERWISE SPECIFIED

1. DIMENSIONING AND TOLERANCING PER ASME Y14.5M, 2009.
2. ALL DIMENSIONS ARE IN MILLIMETERS.
3. DIMENSIONS ARE EXCLUSIVE OF BURRS, MOLD FLASH AND TIE BAR EXTRUSIONS.

DIM	MIN.	NOM.	MAX.
A	0.85	0.95	1.12
A1	0.00	0.05	0.10
b	0.370	0.435	0.508
c	0.085	0.150	0.180
D	2.80	2.92	3.04
E	2.31	2.51	2.71
E1	1.20	1.40	1.52
e	0.95 BSC		
e1	1.90 BSC		
L	0.33	0.38	0.43

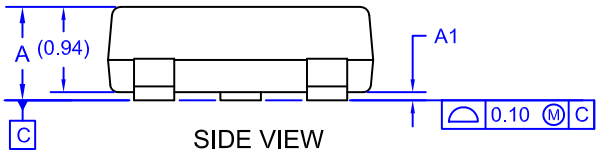

SIDE VIEW

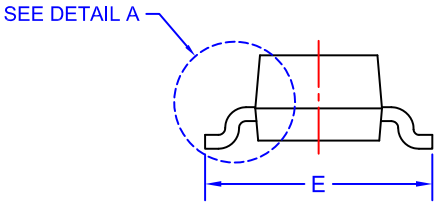

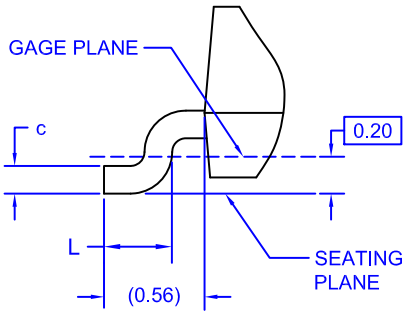

DETAIL A

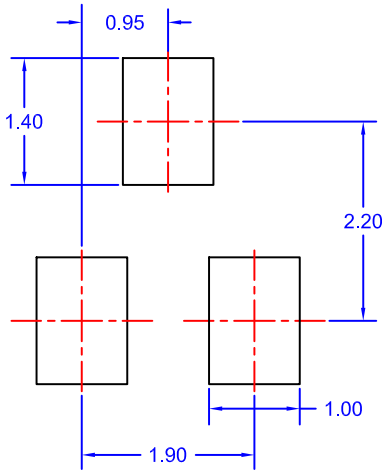

LAND PATTERN RECOMMENDATION*

*FOR ADDITIONAL INFORMATION ON OUR Pb-FREE STRATEGY AND SOLDERING DETAILS, PLEASE DOWNLOAD THE ON SEMICONDUCTOR SOLDERING AND MOUNTING TECHNIQUES REFERENCE MANUAL, SOLDERRM/D.

GENERIC MARKING DIAGRAM*

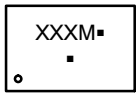

XXX = Specific Device Code
M = Month Code
▪ = Pb−Free Package

(Note: Microdot may be in either location)

*This information is generic. Please refer to device data sheet for actual part marking. Pb−Free indicator, "G" or microdot "▪", may or may not be present. Some products may not follow the Generic Marking.

DOCUMENT NUMBER:	98AON34319E	Electronic versions are uncontrolled except when accessed directly from the Document Repository. Printed versions are uncontrolled except when stamped "CONTROLLED COPY" in red.
DESCRIPTION:	SOT−23/SUPERSOT−23, 3 LEAD, 1.4X2.9	PAGE 1 OF 1

onsemi and onsemi are trademarks of Semiconductor Components Industries, LLC dba **onsemi** or its subsidiaries in the United States and/or other countries. **onsemi** reserves the right to make changes without further notice to any products herein. **onsemi** makes no warranty, representation or guarantee regarding the suitability of its products for any particular purpose, nor does **onsemi** assume any liability arising out of the application or use of any product or circuit, and specifically disclaims any and all liability, including without limitation special, consequential or incidental damages. **onsemi** does not convey any license under its patent rights nor the rights of others.

Downloaded from Arrow.com.

onsemi, onsemi, and other names, marks, and brands are registered and/or common law trademarks of Semiconductor Components Industries, LLC dba "**onsemi**" or its affiliates and/or subsidiaries in the United States and/or other countries. **onsemi** owns the rights to a number of patents, trademarks, copyrights, trade secrets, and other intellectual property. A listing of **onsemi**'s product/patent coverage may be accessed at www.onsemi.com/site/pdf/Patent−Marking.pdf. **onsemi** reserves the right to make changes at any time to any products or information herein, without notice. The information herein is provided "as−is" and **onsemi** makes no warranty, representation or guarantee regarding the accuracy of the information, product features, availability, functionality, or suitability of its products for any particular purpose, nor does **onsemi** assume any liability arising out of the application or use of any product or circuit, and specifically disclaims any and all liability, including without limitation special, consequential or incidental damages. Buyer is responsible for its products and applications using **onsemi** products, including compliance with all laws, regulations and safety requirements or standards, regardless of any support or applications information provided by **onsemi**. "Typical" parameters which may be provided in **onsemi** data sheets and/or specifications can and do vary in different applications and actual performance may vary over time. All operating parameters, including "Typicals" must be validated for each customer application by customer's technical experts. **onsemi** does not convey any license under any of its intellectual property rights nor the rights of others. **onsemi** products are not designed, intended, or authorized for use as a critical component in life support systems or any FDA Class 3 medical devices or medical devices with a same or similar classification in a foreign jurisdiction or any devices intended for implantation in the human body. Should Buyer purchase or use **onsemi** products for any such unintended or unauthorized application, Buyer shall indemnify and hold **onsemi** and its officers, employees, subsidiaries, affiliates, and distributors harmless against all claims, costs, damages, and expenses, and reasonable attorney fees arising out of, directly or indirectly, any claim of personal injury or death associated with such unintended or unauthorized use, even if such claim alleges that **onsemi** was negligent regarding the design or manufacture of the part. **onsemi** is an Equal Opportunity/Affirmative Action Employer. This literature is subject to all applicable copyright laws and is not for resale in any manner.

ADDITIONAL INFORMATION

TECHNICAL PUBLICATIONS:
Technical Library: www.onsemi.com/design/resources/technical−documentation
onsemi Website: www.onsemi.com

ONLINE SUPPORT: www.onsemi.com/support
For additional information, please contact your local Sales Representative at www.onsemi.com/support/sales

Downloaded from Arrow.com.