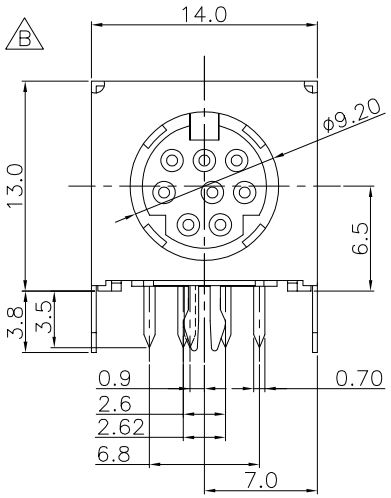

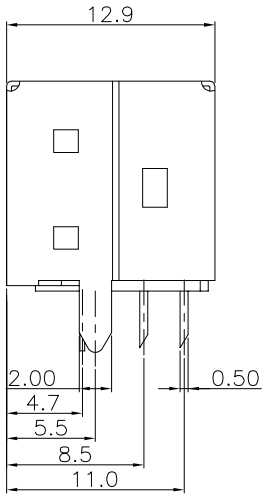

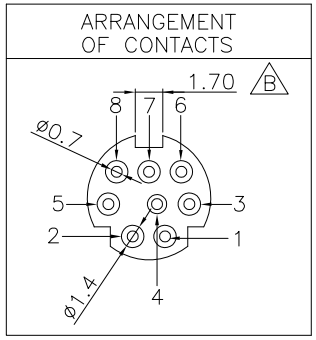

B Specifications:
Current rating: 1.0A AC/2.0 DC
Voltage rating: 100V AC/12V DC
Contact resistance: 30m ohm. max.
Insulation resistance: 100M ohm. Min.
Withstanding voltage: 250V AC for one minute

B Material and Finish:
Insulator: Thermoplastic (UL94V-0)
Standard Color: Black
Contact: Copper Alloy
Plating: Selective Gold Plated
Shield: Copper Alloy, Tin Plated

How To Order
MD-8056
No. Of Contacts

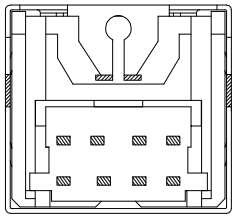

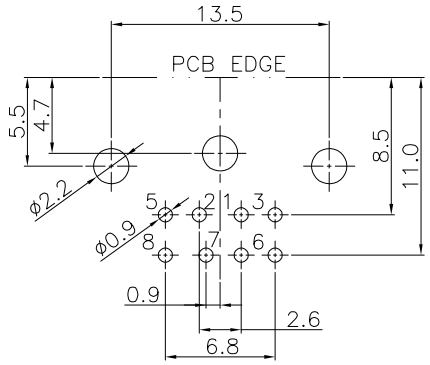

P.C.B. Layout
(BOTTOM VIEW)

RoHS Compliant

REV	DATE	FILE	BY
F			
E			
D			
C			
B	28-MAR-2024	Update Drawing	Jamie
A	04-FEB-2016		Justin Ho

DRAWN: Justin Ho
CHECKED: Jerry Chen
APPROVAL: Mike Wu

GENERAL TOLERANCE:
.X=±0.25
.XX=±0.13

UNIT: MM
SCALE: 1:1
SHEET: 1/1
PROJECTION:

ON-SHORE TECHNOLOGY, INC.

DESCRIPTION: MINI DIN JACK FLAT 8 PIN DIP 5 Wall Shield

PART NO: MD-8056

SIZE A4

Downloaded from Arrow.com.