Data Sheet

LT83401/LT83402

42V, 1A/2.5A Step-Down Silent Switcher 3 with Ultra-Low Noise Reference

FEATURES

- **Silent Switcher® 3 Architecture**
  - **Ultra-Low RMS Noise (10Hz–100kHz): 2.8µV_{RMS}**
  - **Ultra-Low Spot Noise: 4nV/√Hz at 10kHz**
  - **Ultra-Low EMI Emissions**
- **Ultra-Fast Transient Response**
  - **Minimizes the Output Capacitance**
- **High Efficiency at High Frequency**
  - **Up to 92.4% Efficiency at 2MHz, 12V_{IN} to 5V_{OUT}**
- **Input Voltage Range: 2.8V to 42V**
- **Output Voltage Range: 0V to (V_{IN} - 1V)**
  - **Unity Gain Configuration Up to 15V_{OUT}**
- **Fast Minimum Switch On-Time: 22ns**
- **Precision Reference: ±0.8% Over Temperature with Remote Sense**
- Forced Continuous Mode Capability
- Adjustable and Synchronizable: 300kHz to 6MHz
- Programmable Power Good
- *Tiny, 15-Lead 3mm x 2mm LFCSP Package*
- Pin-to-Pin Compatible Family: *LT83201* (18V, 1A), *LT83203* (18V, 3A), and *LT83205* (18V, 5A)
- AEC-Q100 Qualified for Automotive Applications

GENERAL DESCRIPTION

The **LT®83401/LT®83402** synchronous step-down regulator is uniquely designed to combine an ultra-low-noise reference with Silent Switcher architecture to achieve both high efficiency and excellent wideband noise performance.

The innovative, ultra-low noise architecture provides exceptional low-frequency (0.1Hz to 100kHz) output noise performance in a switching regulator. The output voltage can be programmed with a single resistor, resulting in virtually constant output noise independent of output voltage.

Silent Switcher architecture minimizes Electro-magnetic interference (EMI) emissions while delivering high efficiency at high switching frequencies.

The LT83401/LT83402 is ideal for high-current, noise-sensitive applications that benefit from the high efficiency of a synchronous switching regulator.

APPLICATIONS

- Automotive and Industrial Power Supplies
- Medical Applications: Imaging and Diagnostics
- High-Speed and High-Precision Data Converters
- Bipolar, Very Low-Noise Power Supplies
- Low-Noise Instrumentation and Displays

TYPICAL APPLICATION

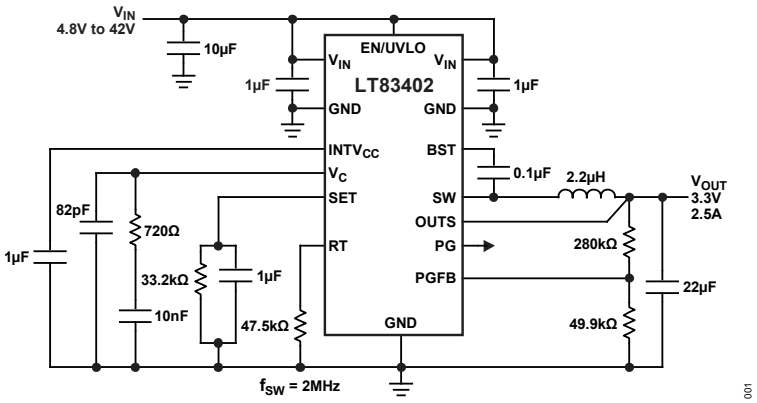

Figure 1. Simplified Application Diagram

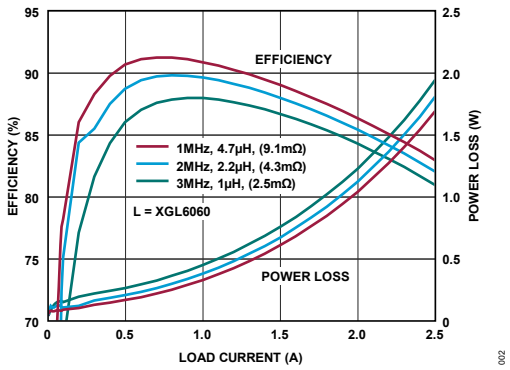

Figure 2. 12V to 3.3V Efficiency

©2026 Analog Devices, Inc. All rights reserved.

Downloaded from Arrow.com.

TABLE OF CONTENTS

Features 1
Applications 1
Typical Application 1
Revision History 3
Specifications 4
Absolute Maximum Ratings 7
Pin Configurations and Functional Descriptions 8
Typical Performance Characteristics 11
Block Diagram 18
Theory of Operation 19
Applications Information 20
- Low-Frequency Output Noise 20
- Filtering Switching Ripple and High-Frequency Noise 20
- PCB Layout Recommendations 21
- Forced Continuous Mode (FCM) 23
- Pulse-Skipping Mode 23
- Synchronization 23
- Setting the Switching Frequency 24
- Operating Frequency Selection and Trade-Offs 24
- Inductor Selection and Maximum Output Current 25
- Overcurrent Protection (OCP) 27
- Input Capacitors 27
- Output Capacitor and Output Ripple 27
- Output Voltage 28
- Output Voltages Above 15V 30
- High V_{OUT} Considerations 30
- Output Voltages Below 0.5V 30
- Output Sensing and Stability 30
- Frequency Compensation 31
- EN/UVLO Pin 32
- $INTV_{CC}$ Regulator 32
- SET Pin Capacitor: Noise and Soft-Start 32
- Fast Start-Up 35
- Programmable Power Good 35

Downloaded from Arrow.com.

Shorted and Reversed Input Protection 36
Thermal Considerations 37
Typical Applications 38
Outline Dimensions 42
Ordering Guide 43
Related Parts 44

REVISION HISTORY

REVISION NUMBER	REVISION DATE	DESCRIPTION	PAGE NUMBER
0	10/25	Initial release	—
1	4/26	Updated Features section Updated EC table Updated Figure 20 Updated Forced Continuous Mode (FCM) and Synchronization sections Updated Fast Start-Up section, Equation 13 Included Figures 60 and 61 Updated Figure 64 Included Figures 65, 66, and 67 Updated Ordering Guide table	1 5, 6 13 23 35 38 39 40, 41 43

Downloaded from Arrow.com.

SPECIFICATIONS

Table 1. Electrical Characteristics

(T_J = -40°C to +150°C, unless otherwise noted. Typical values are at T_A = +25°C. All voltages are referenced to GND, unless otherwise noted.)

PARAMETER	SYMBOL	CONDITIONS/COMMENTS	MIN	TYP	MAX	UNITS
Minimum V_{IN}	V_{IN}	V_{SET} = 1V		2.5	2.8	V
OUTS, SET Operating Voltage	V_{OUTS}, V_{SET}		0		15	V
SET Pin Current (I_{SET})	I_{SET}	V_{SET} = V_{OUTS} = 1V	99.2	100	100.8	µA
Fast Start-Up Set Pin Current	$I_{FAST_STARTUP}$	V_{IN} = 12V, V_{SET} = 1V, T_A = +25°C	1.9	2.5	3.1	mA
Start-Up Time Without Fast Start-Up[1, 2]	$t_{STARTUP}$	V_{OUT} = 1V, C_{SET} = 1µF, V_{IN} = 12V, V_{PGFB} = 0.5V		29.4		ms
		V_{OUT} = 1V, C_{SET} = 4.7µF, V_{IN} = 12V, V_{PGFB} = 0.5V		127.8		
Start-Up Time With Fast Start-Up[1, 2]	$t_{STARTUP}$	V_{OUT} = 1V, C_{SET} = 1µF, V_{IN} = 12V, $R_{PGFB(TOP)}$ = 49.9kΩ, $R_{PGFB(BOT)}$ = 49.9kΩ		0.5		ms
		V_{OUT} = 1V, C_{SET} = 4.7µF, V_{IN} = 12V, $R_{PGFB(TOP)}$ = 49.9kΩ, $R_{PGFB(BOT)}$ = 49.9kΩ		2		
Output Noise Spectral Density (10kHz)[1, 3, 4]	$V_{O,NSD\ (10kHz)}$	V_{IN} = 12V, V_{OUT} = 3.3V, C_{OUT} = 88µF, L = 2.2µH, R_{SET} = 33.2kΩ, C_{SET} = 4.7µF, f_{SW} = 6MHz, R_C = 2.7kΩ, C_C = 1nF		4		nV/√Hz
Output Root Mean Square (RMS) Noise (10Hz–100kHz)[1, 3, 4]	$V_{O,RMS}$	V_{IN} = 12V, V_{OUT} = 3.3V, BW = 10Hz to 100kHz, C_{OUT} = 88µF, L = 2.2µH, R_{SET} = 3.3kΩ, C_{SET} = 4.7µF, f_{SW} = 6MHz, R_C = 2.7kΩ, C_C = 1nF		2.8		$µV_{RMS}$
V_{IN} Quiescent Current	I_Q	$V_{EN/UVLO}$ = 2V, not switching, T_A = +25°C		3	3.6	mA
		$V_{EN/UVLO}$ = 0.2V, shutdown, T_A = +25°C		45	70	µA
Oscillator Frequency	f_{SW}	R_T = 392kΩ	285	315	345	kHz
		R_T = 47.5kΩ	1.95	2	2.05	MHz
		R_T = 9.76kΩ	5.04	5.6	6.16	
Power Good Feedback (PGFB) Upper Threshold	V_{PGH}	V_{PGFB} rising	529	537.5	546	mV
PGFB Upper Threshold Hysteresis	V_{PGH_HYS}			10		mV
PGFB Lower Threshold	V_{PGL}	V_{PGFB} falling	455	462.5	470	mV

Downloaded from Arrow.com.

(T_J = -40°C to +150°C, unless otherwise noted. Typical values are at T_A = +25°C. All voltages are referenced to GND, unless otherwise noted.)

PARAMETER	SYMBOL	CONDITIONS/COMMENTS	MIN	TYP	MAX	UNITS
PGFB Lower Threshold Hysteresis	V_{PGL_HYS}			10		mV
PGFB Lower Threshold (Start-Up Only)	$V_{PGL_STARTUP}$	V_{PGFB} rising	479	487	495	mV
PGFB Pin Current	I_{PGFB}	V_{IN} = 12V, $V_{EN/UVLO}$ = 2V, V_{PGFB} = 0.5V		13		nA
Power Good (PG) Leakage	I_{PG_LKG}	V_{PG} = 3.3V, T_A = +25°C	-40		+40	nA
PG Pull-Down Resistance	R_{PG}	V_{PG} = 0.5V		380	1200	Ω
SYNC/MODE Threshold	V_{IL}	SYNC/MODE DC and clock low- level voltage	0.7			V
	V_{IH}	SYNC/MODE DC and clock high- level voltage			1.5	
OUTS Pin Output Current	I_{OUTS}	V_{OUTS} = 1V, T_A = +25°C	110	170	230	nA
Output Voltage Line Regulation[5]	$\Delta V_{OUT(LINE)}$	V_{IN} = 4V to 42V, T_A = +25°C		0.001	0.01	%/V
Error Amp Offset[5, 6]	$V_{EA, OFFSET}$	V_C = 1.2V, V_{SET} = 3V, V_{IN} = 12V, positive-negative-positive (PNP)–based input pair	-2		+2	mV
		V_C = 1.2V, V_{SET} = 5V, V_{IN} = 5.7V, negative-positive-negative (NPN)–based input pair	-2		+2	
Error Amp Transconductance[6]	$g_{m(EA)}$	V_C = 1.2V, V_{SET} = 3V, V_{IN} = 12V, PNP–based input pair, T_A = +25°C	9.5	12	14.5	mS
	$g_{m(EA)}$	V_C = 1.2V, V_{SET} = 5V, V_{IN} = 5.7V, NPN-based input pair, T_A = +25°C	8.3	10.5	12.7	
Error Amp Gain	A_V	V_C = 1.2V, V_{SET} = 1V, V_{IN} = 6V, LT83401		2400		V/V
		V_C = 1.2V, V_{SET} = 1V, V_{IN} = 6V, LT83402		2000		
V_C Source Current[6]	$I_{VC\text{-}SRC}$	V_C = 1.2V, V_{SET} = 3V, V_{IN} = 12V, PNP–based input pair		340		µA
		V_C = 1.2V, V_{SET} = 3V, V_{IN} = 12V, NPN–based input pair		340		
V_C Sink Current[6]	$I_{VC\text{-}SNK}$	V_C = 1.2V, V_{SET} = 3V, V_{IN} = 12V, PNP-based input pair		340		µA
		V_C = 1.2V, V_{SET} = 3V, V_{IN} = 12V, NPN-based input pair		340		
V_C Pin-to-Switch Current Gain	G_M	LT83401		2.3		A/V
		LT83402		3.6		
V_C Clamp Voltage	V_{C_CLAMP}			2		V
Minimum On-Time	$t_{ON(MIN)}$	I_{LOAD} = 1A		22	27	ns

Downloaded from Arrow.com.

(T_J = -40°C to +150°C, unless otherwise noted. Typical values are at T_A = +25°C. All voltages are referenced to GND, unless otherwise noted.)

PARAMETER	SYMBOL	CONDITIONS/COMMENTS	MIN	TYP	MAX	UNITS
Minimum Off-Time	$t_{OFF(MIN)}$	I_{LOAD} = 0.5A, LT83401 I_{LOAD} = 1A, LT83402		80	105	ns
Top Power N-Channel MOSFET Current Limit	$I_{PEAK-LIMIT}$	LT83401	1.96	2.2	2.44	A
		LT83402	3.4	4.0	4.4	
Bottom Power N-Channel MOSFET Current Limit	$I_{VALLEY-LIMIT}$	LT83401	1.28	1.5	1.72	A
		LT83402	1.95	2.4	2.85	
SW Leakage Current	I_{SW_LKG}	V_{IN} = 42V, V_{SW} = 0V, 42V, T_A = +25°C	-1		+1	µA
Power MOSFET On-Resistance Main Switch (Top)	R_{DS-ONH}			280		mΩ
Power MOSFET On-Resistance Synchronous Switch (Bottom)	R_{DS-ONL}			135		mΩ
SET Pull-Down Resistance	$R_{SET-PULLDOWN}$	V_{SET} = 0.5V		540	865	Ω
EN/UVLO Threshold	V_{ENR}	EN/UVLO rising	0.7	0.75	0.8	V
EN/UVLO Hysteresis	V_{EN_HYS}			55		mV
EN/UVLO Input Current	I_{EN}	$V_{EN/UVLO}$ = 2V, T_A = +25°C	-40		+40	nA

[1] Not subject to production test.

[2] The start-up time is defined as the time it takes from the EN/UVLO pin rising above the EN/UVLO threshold to when V_{OUT} has reached 95% of its final value.

[3] OUTS ties directly to V_{OUT}.

[4] Adding a capacitor across the SET pin resistor decreases output voltage noise. Adding this capacitor bypasses the SET pin resistor's thermal noise as well as the reference current's noise. Use of a SET pin bypass capacitor also increases start-up time.

[5] The LT83401/LT83402 is tested in a feedback loop that servos V_C to a specified voltage and measures the resultant V_{OUTS}.

[6] The PNP-based input pair is active for the error amplifier as long as V_{IN} is at least 1.4V above V_{SET}. As V_{IN} drops to less than 1.4V above V_{SET}, the part gradually transitions to operating with the NPN-based input pair active.

[7] Thermal Resistance (θ) values determined per JEDEC 51-7, 51-12. For information on improving the thermal resistance and for actual temperature measurements of a demo board in typical operating conditions, see the *Applications Information* section.

[8] This IC includes overtemperature protection that is intended to protect the device during overload conditions. Junction temperature exceeds 150°C when overtemperature protection is active. Continuous operation above the specified maximum operating junction temperature reduces lifetime.

Downloaded from Arrow.com.

ABSOLUTE MAXIMUM RATINGS

T_A = 25°C, unless otherwise specified.

Table 2. Absolute Maximum Ratings

PARAMETER	RATING
V_{IN}, EN/UVLO, PG	-0.3V to 42V
OUTS, SET	-0.3V to 16.5V
SYNC, PGFB	-0.3V to 6V
Operating Junction Temperature	-40°C to +150°C
Storage Temperature Range	-65°C to +150°C
Peak Package Body Temperature	260°C

Stresses beyond those listed under Absolute Maximum Ratings may cause permanent damage to the device. These are stress ratings only, functional operation of the product at these or any other conditions above those indicated in the operational section of this specification is not implied. Operation beyond the maximum operating conditions for extended periods may affect product reliability.

Downloaded from Arrow.com.

PIN CONFIGURATIONS AND FUNCTIONAL DESCRIPTIONS

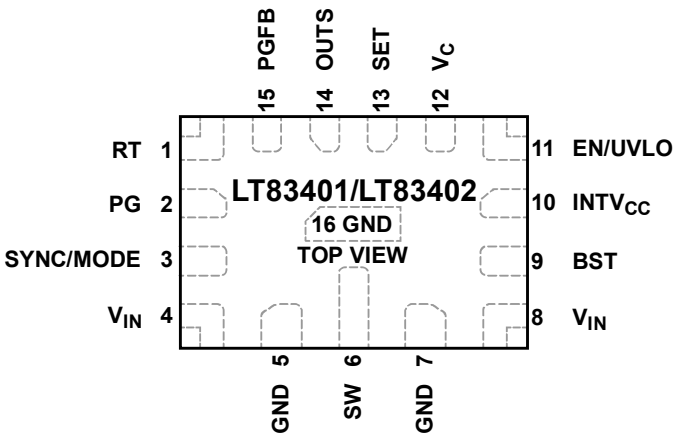

LFCSP PACKAGE
15-LEAD (3mm × 2mm × 0.75mm)
JEDEC BOARD θ_{JA} = 50°C/W, $\theta_{JC(TOP)}$ = 67.1°C/W, $\theta_{JC(PAD)}$ = 10.4°C/W
DEMO BOARD θ_{JA} = 33°C/W, ψ_{JT} = 1.7°C/W
EXPOSED PAD IS GND AND SHOULD BE SOLDERED TO PCB

003

Figure 3. Pin Configurations

Table 3. Pin Descriptions

PIN	NAME	DESCRIPTION
1	RT	A resistor is connected between the RT and ground to set the switching frequency.
2	PG	The PG pin is the open-drain output of an internal comparator. PG remains high impedance until the PGFB pin is within ±7.5% of 0.5V, and there are no fault conditions. PG is pulled low when EN/UVLO is below 0.75V, $INTV_{CC}$ has fallen too low, or during thermal shutdown. PG is valid when V_{IN} is above 2.8V.
3	SYNC/MODE	For the LT83401/LT83402, this pin programs three different operating modes: 1) Pulse-Skipping Mode: Connect this pin to GND for pulse-skipping mode for improved efficiency at light loads. 2) Forced Continuous Mode (FCM): This mode offers fast transient response and full frequency operation over a wide load range. Connect this pin high to $INTV_{CC}$ (~3.4V) or an external supply greater than 1.5V for FCM. The part also operates in this mode by default if this pin is left floating. 3) Synchronization Mode: Drive this pin with a clock source to synchronize to an external frequency. During synchronization, the part operates in forced continuous mode. The SYNC/MODE pin can be toggled during operation to change the operating mode. Contact the factory for versions of this part that replace the SYNC/MODE pin with a CLKOUT pin. The CLKOUT pin would provide a 50% duty-cycle square wave of the switching frequency, 180° out-of-phase with the internal clock of the part, with a peak-to-peak amplitude of $INTV_{CC}$ to GND.

Downloaded from Arrow.com.

4, 8	V_{IN}	The V_{IN} pins supply current to the LT83401/LT83402 internal circuitry and to the internal topside power switch. Two 0402 capacitors of 0.1µF or more should be placed to bypass both V_{IN} pins, with the positive terminal of the input capacitor as close as possible to the V_{IN} pins, and the negative capacitor terminal as close as possible to the GND pins. V_{IN} pins must also be connected with an additional local bypass capacitor of 4.7µF or more. To provide sufficient headroom for the current reference, V_{IN} must be at least 900mV higher than the required regulation setpoint that is programmed via the SET pin. For example, for the required regulation setpoint of 3.3V, V_{IN} must be at least 3.3V + 900mV = 4.2V, or higher.
5, 7, 16 (Exposed Pad)	GND	Ground. Place the negative terminal of the input capacitor as close to the GND pins as possible. The exposed pads should be soldered to the PCB for good thermal performance. If necessary due to manufacturing limitations, the exposed pad may be left disconnected; however, the performance degrades.
6	SW	The SW pin is the output of the internal power switches. Connect this pin to the inductor. This node must be kept small on the PCB for good performance and low EMI.
9	BST	This pin is used to provide a drive voltage higher than the input voltage to the topside power switch. Place a 0.1µF boost capacitor as close as possible to the IC.
10	$INTV_{CC}$	Internal 3.4V Regulator Bypass Pin. The internal power drivers and control circuits are powered by this voltage. Do not load the $INTV_{CC}$ pin with external circuitry. $INTV_{CC}$ current is supplied by V_{IN}. Decouple this pin to ground with at least 1µF low equivalent series resistance (ESR) ceramic capacitor placed close to the IC.
11	EN/UVLO	A voltage at this pin greater than 0.75V enables switching, and a voltage less than 200mV is guaranteed to shut down the internal current bias and sub-regulators. The hysteretic threshold voltage is 0.75V going up and 0.7V going down. Connect to V_{IN} if the shutdown feature is not used. An external resistor divider from V_{IN} is used to program a V_{IN} threshold below which the LT83401/LT83402 shuts down.
12	V_C	The V_C pin is the output of the internal error amplifier. The voltage on this pin controls the peak switch current. Connect an RC network from this pin to ground to compensate the control loop.
13	SET	This pin is the non-inverting input of the error amplifier and the regulation setpoint for the LT83401/LT83402. SET sources a precision 100µA current that flows through an external resistor connected between the SET and GND. The LT83401/LT83402's output voltage is determined by $V_{SET} = I_{SET} \times R_{SET}$ when used in the default unity gain configuration. SET pin voltage range is from 0 to 15V. For applications with output voltages above 15V, see the *Output Voltages Above 15V* section. A capacitor should be added from SET to GND for the best noise performance. Increasing this capacitance further improves noise at the expense of increased start-up time. See the *SET Pin Capacitor: Noise and Soft-Start* section for important information on how to select this capacitor. For optimum load regulation, Kelvin connect the ground side of the SET pin resistor directly to the load. This pin is pulled to ground with a 520Ω MOSFET ($R_{SET-PULLDOWN}$) during shutdown and fault conditions.

Downloaded from Arrow.com.

14	OUTS	Output Sense. This pin is the inverting input to the error amplifier. For optimal transient performance and load regulation, Kelvin connect OUTS directly to the output capacitor and the load.
15	PGFB	Power Good Feedback. The PG pin pulls low if PGFB increases above 537.5mV or decreases below 462.5mV. Connecting an external resistor divider between V_{OUT}, PGFB, and GND sets the programmable power good threshold with the following transfer function: 0.5V (±7.5%) × (1 + $R_{PGFB(TOP)}/R_{PGFB(BOT)}$). As discussed in the *Applications Information* section, PGFB also activates the fast start-up circuitry. The PGFB pin must be connected to $INTV_{CC}$ or 0.5V if power good and fast start-up functionalities are not needed.

Downloaded from Arrow.com.

TYPICAL PERFORMANCE CHARACTERISTICS

T_A = 25°C, unless otherwise noted.

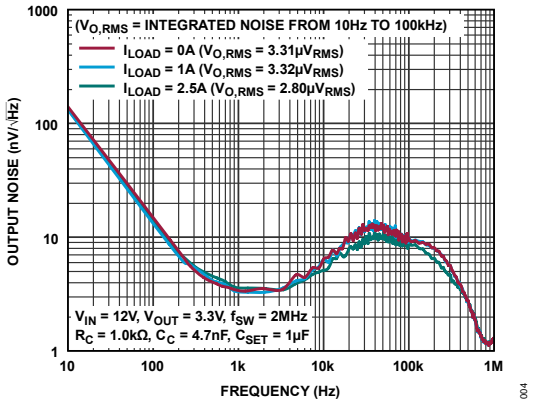

Figure 4. Noise Spectral Density vs. Load
See Typical Application Circuit (Figure 59)

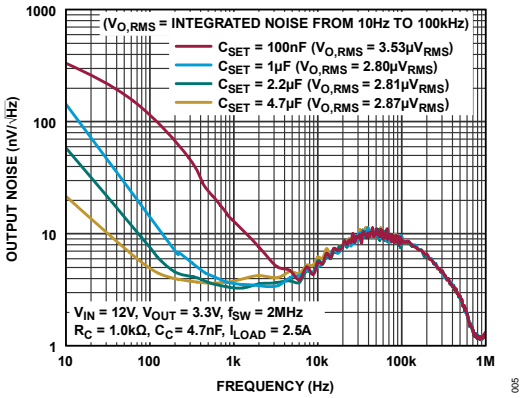

Figure 5. Noise Spectral Density vs. C_{SET}
See Typical Application Circuit (Figure 59)

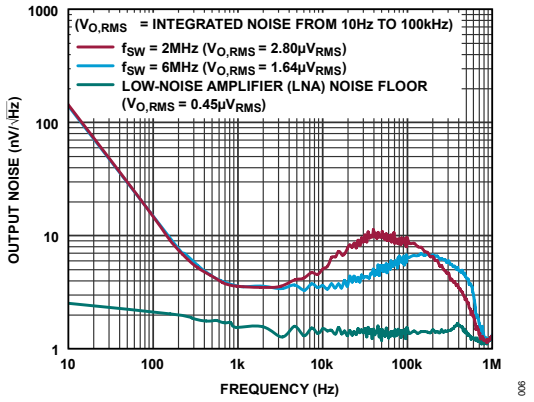

Figure 6. Noise Spectral Density vs. f_{SW}
See Typical Application Circuit (Figure 59)

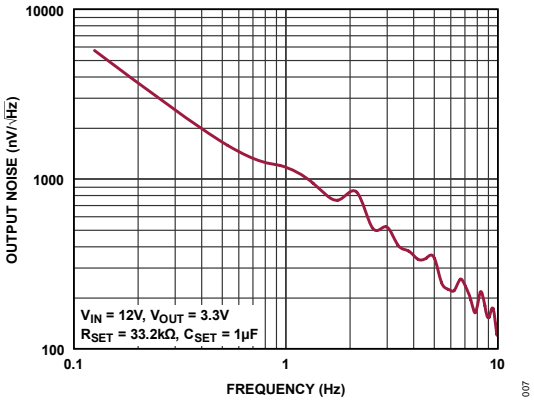

Figure 7. Noise Spectral Density (0.1Hz to 10Hz)

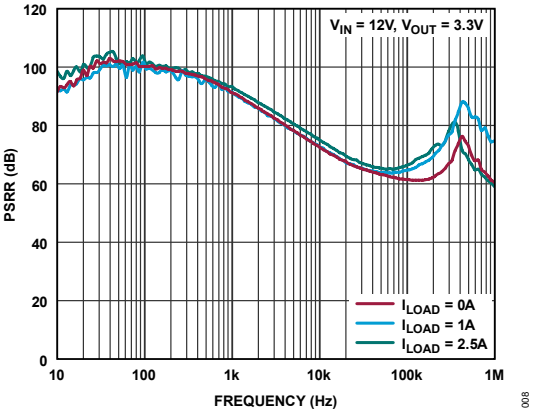

Figure 8. Power-Supply Ripple Rejection
See Typical Application Circuit (Figure 59)

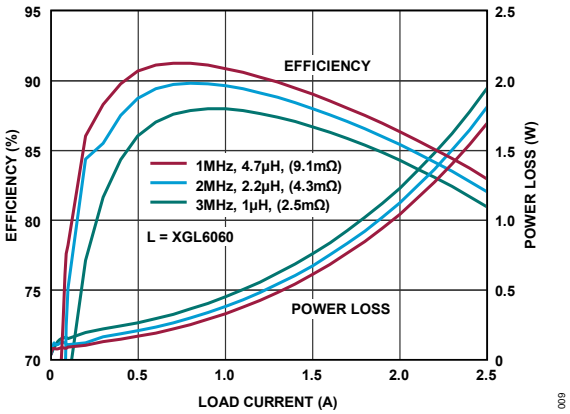

Figure 9. $12V_{IN}$ to $3.3V_{OUT}$ Efficiency

Downloaded from Arrow.com.

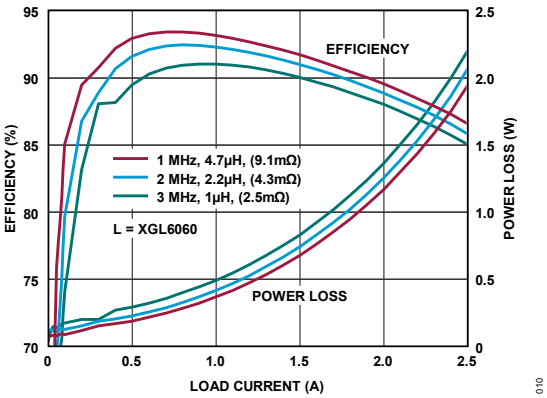

Figure 10. 12V_{IN} to 5V_{OUT} Efficiency

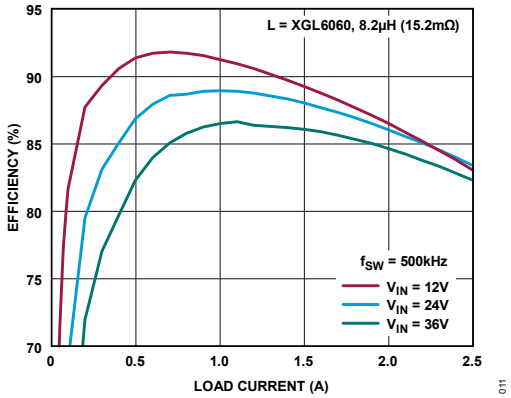

Figure 11. Efficiency at 3.3V_{OUT}

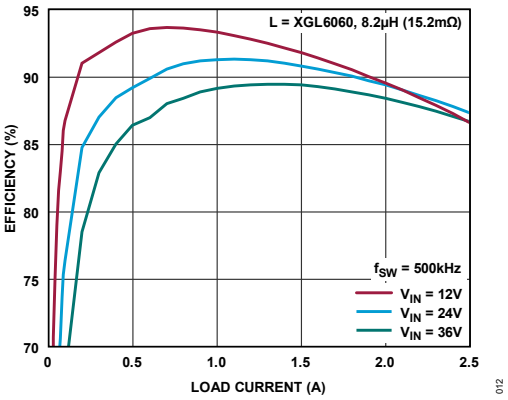

Figure 12. Efficiency at 5V_{OUT}

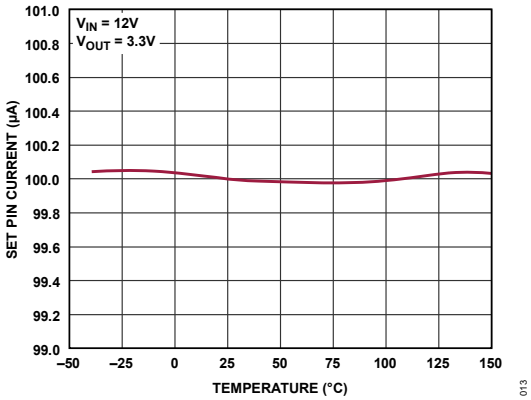

Figure 13. SET Pin Current vs. Temperature

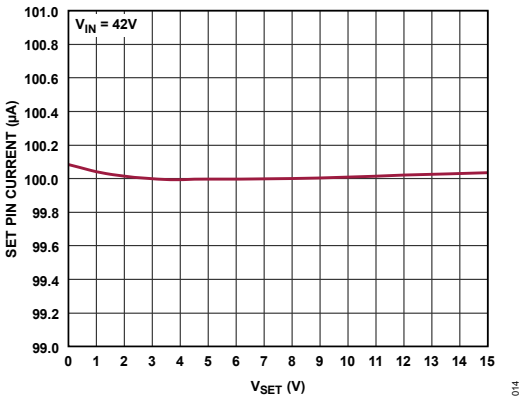

Figure 14. Set Pin Current vs. V_{SET}

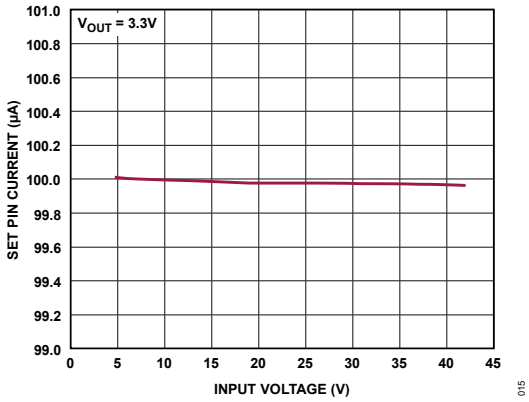

Figure 15. Set Pin Current vs. V_{IN}

Downloaded from Arrow.com.

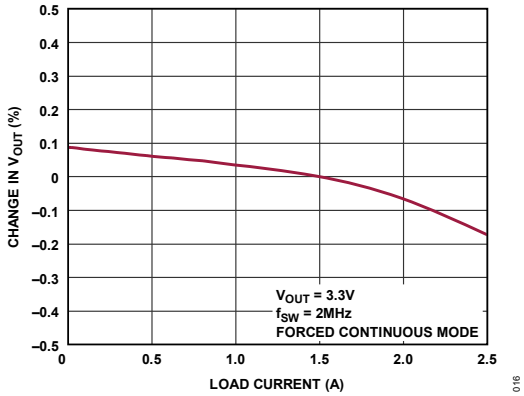

Figure 16. Load Regulation

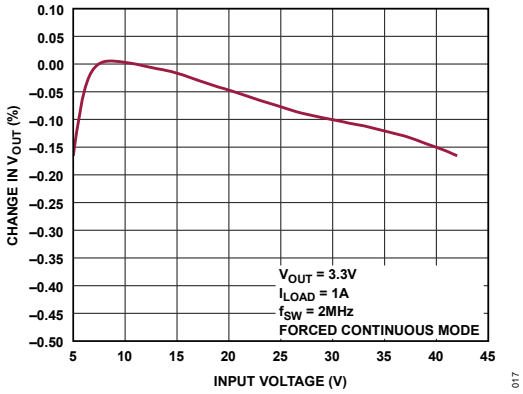

Figure 17. Line Regulation

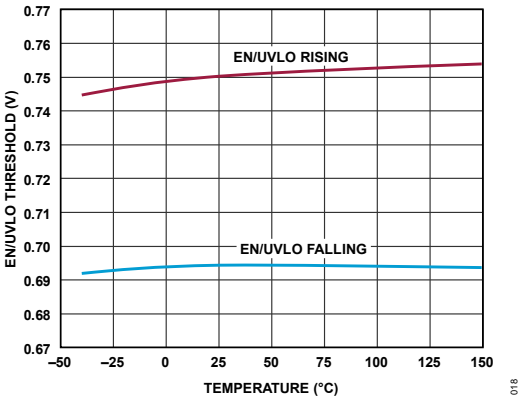

Figure 18. EN/UVLO Pin Thresholds

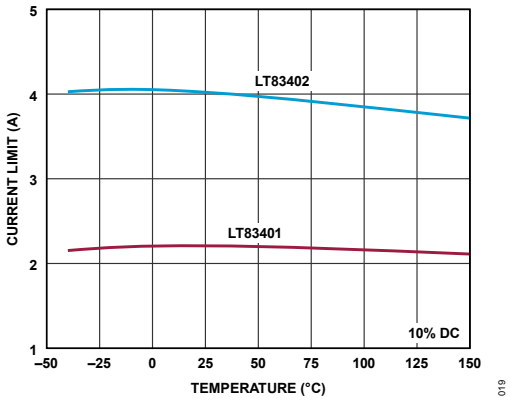

Figure 19. Top MOSFET Current Limit vs. Temperature

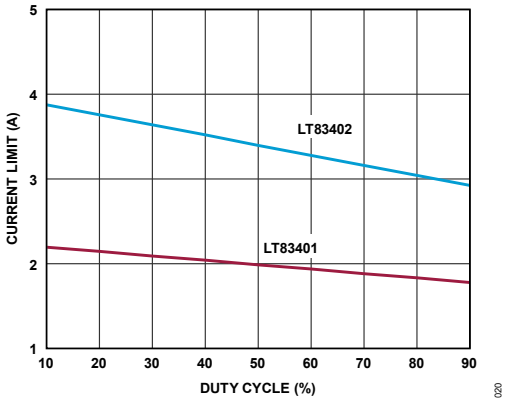

Figure 20. Top MOSFET Current Limit vs. Duty Cycle

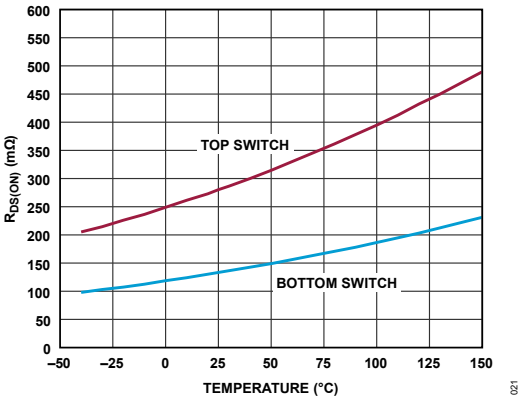

Figure 21. Switch $R_{DS(ON)}$ vs. Temperature

Downloaded from Arrow.com.

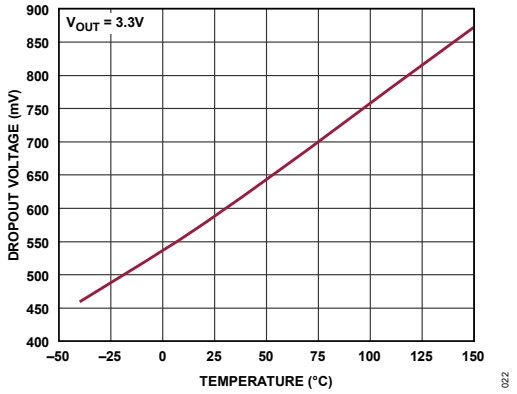

Figure 22. V_{IN} to V_{SET} Dropout Voltage vs. Temperature

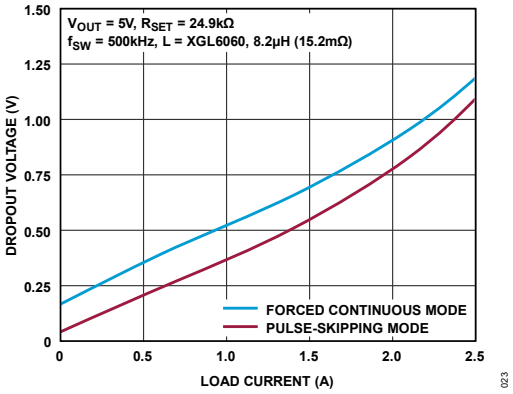

Figure 23. V_{IN} to V_{OUT} Dropout Voltage vs. I_{LOAD}

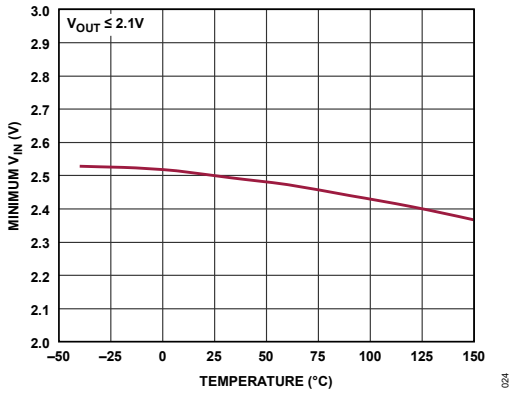

Figure 24. Minimum V_{IN} vs. Temperature

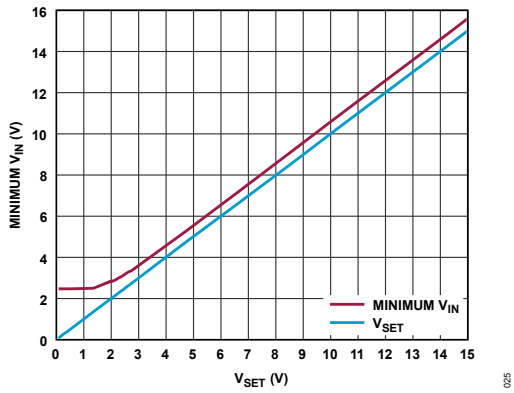

Figure 25. Minimum V_{IN} as a Function of V_{SET}

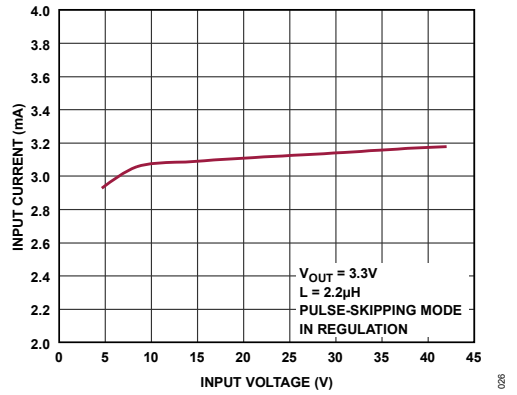

Figure 26. No-Load Supply Current

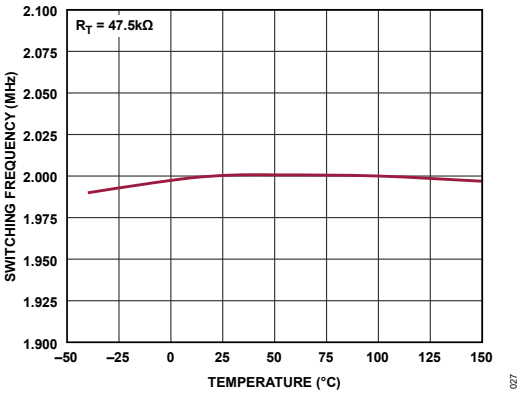

Figure 27. Switching Frequency vs. Temperature

Downloaded from Arrow.com.

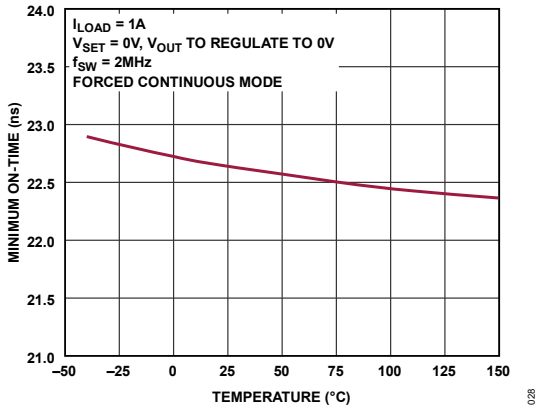

Figure 28. Minimum On-Time vs. Temperature

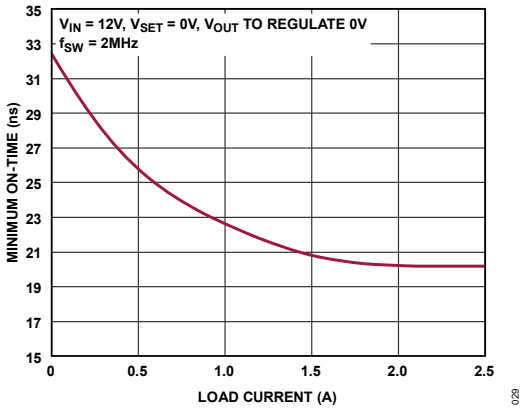

Figure 29. Minimum On-Time vs. Load

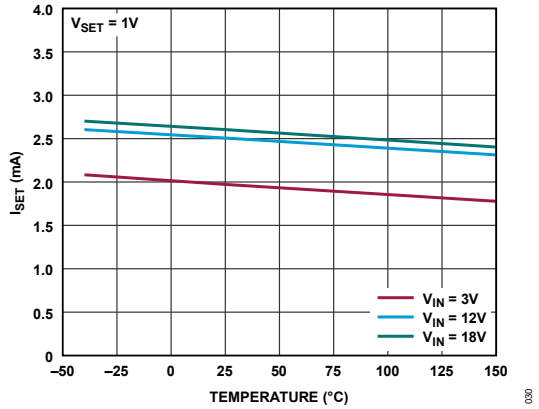

Figure 30. I_{SET} During Start-Up with Fast Start-Up Enabled vs. Temperature

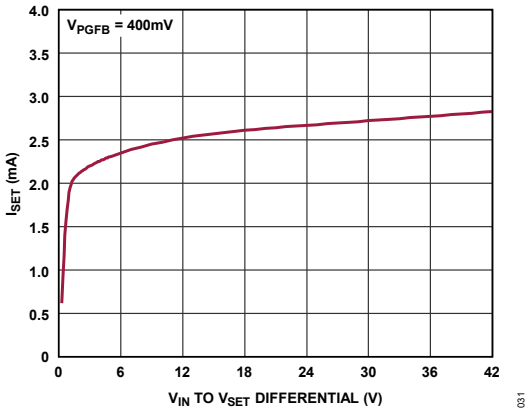

Figure 31. I_{SET} During Start-Up with Fast Start-Up Enabled vs. V_{IN} to V_{SET} Differential

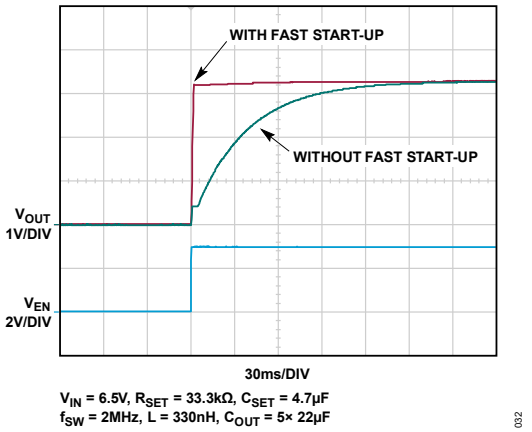

Figure 32. Start-Up Time with and without Fast Start-Up Circuitry for Large C_{SET}

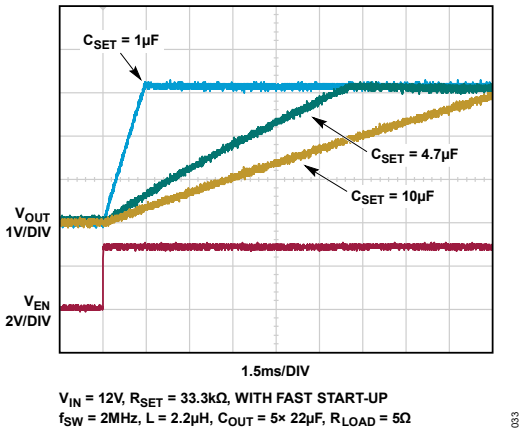

Figure 33. Soft-Start Waveforms

Downloaded from Arrow.com.

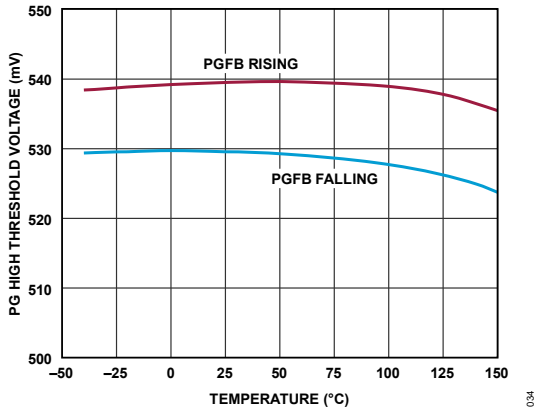

Figure 34. PG High Thresholds

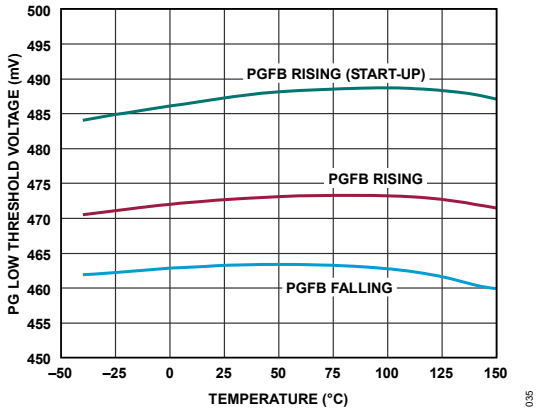

Figure 35. PG Low Thresholds

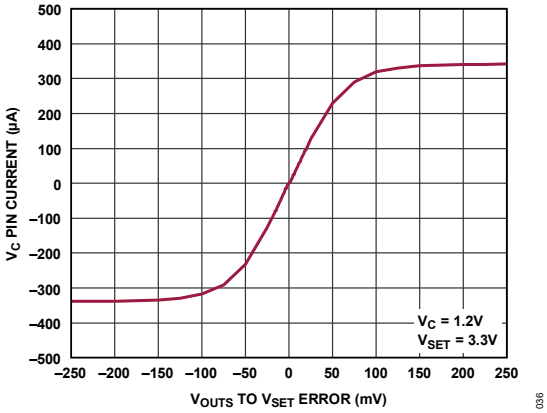

Figure 36. Error Amp Output Current

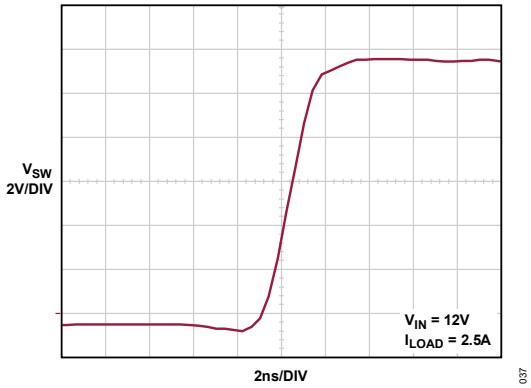

Figure 37. Switch Rising Edge

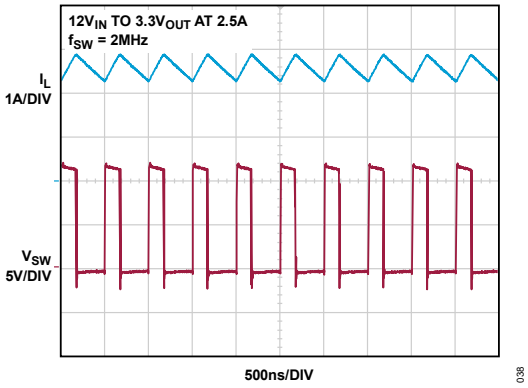

Figure 38. Switching Waveforms, Full-Frequency Continuous Operation

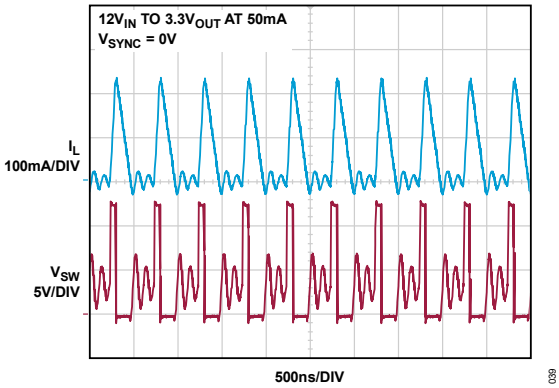

Figure 39. Switching Waveforms, Full-Frequency Pulse-Skipping Operation

Downloaded from Arrow.com.

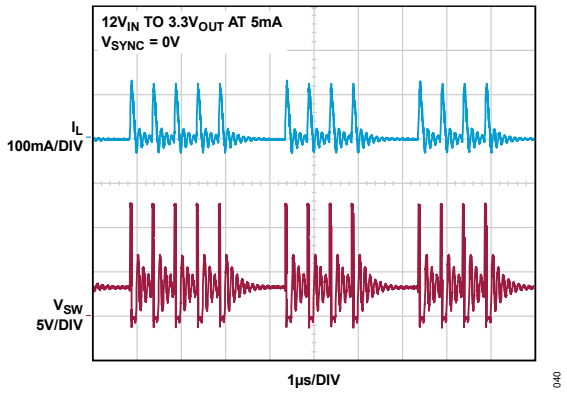

Figure 40. Switching Waveforms, Pulse-Skipping Operation

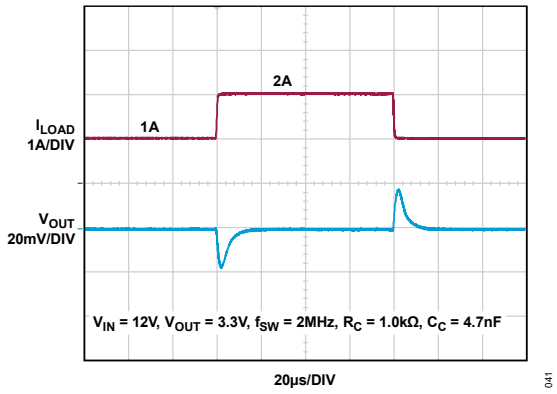

Figure 41. Transient Response: Load Current Stepped from 1A to 2A
See Typical Application Circuit (Figure 59)

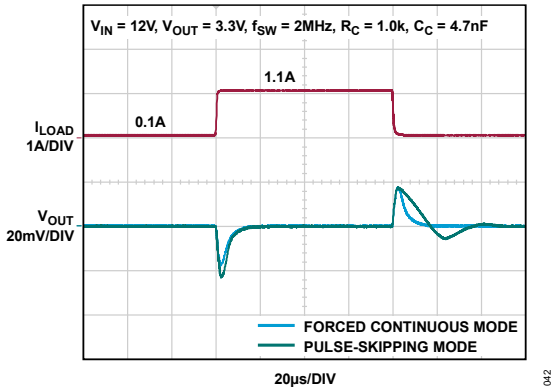

Figure 42. Transient Response: Load Current Stepped from 0.1A to 1.1A

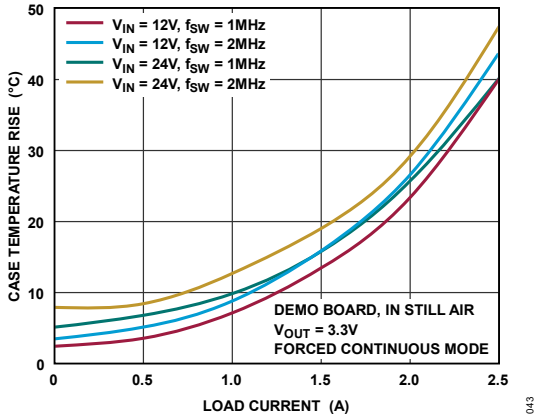

Figure 43. Case Temperature Rise

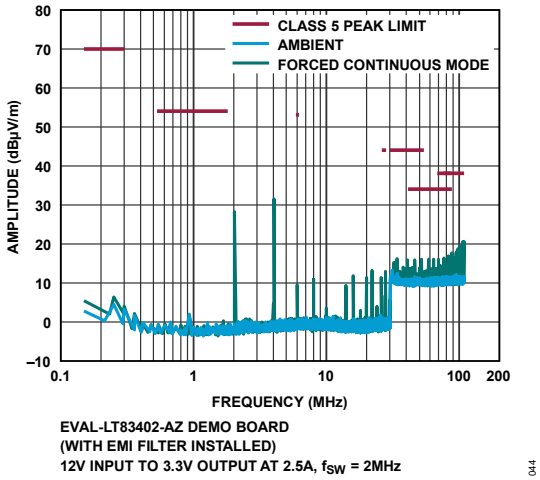

Figure 44. Conducted EMI Performance (CISPR Conducted Emission Test with Class 5 Peak Limits)

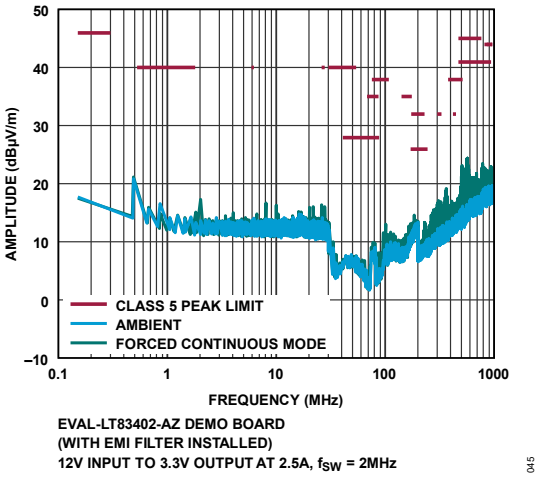

Figure 45. Radiated EMI Performance (CISPR25 Radiated Emission Test with Class 5 Peak Limits)

Downloaded from Arrow.com.

BLOCK DIAGRAM

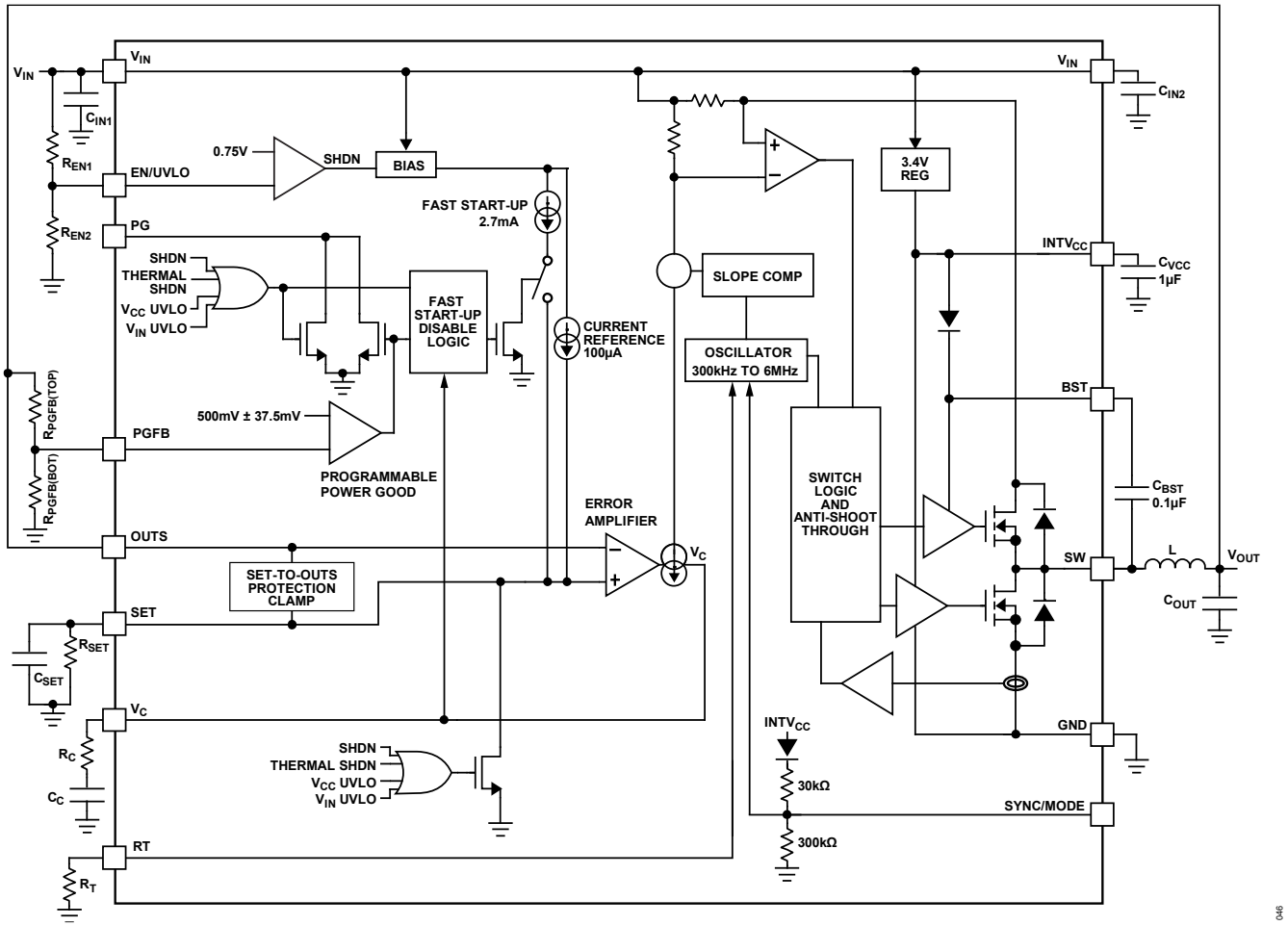

Figure 46. Block Diagram

Downloaded from Arrow.com.

THEORY OF OPERATION

The LT83401/LT83402 is a constant-frequency, current-mode, monolithic step-down regulator that operates using a current reference-based architecture, allowing the employment of unity gain to minimize output noise across all output voltages. An oscillator, with the frequency set using a resistor on the RT pin, turns on the internal top power switch at the beginning of each clock cycle. The current in the inductor increases until the top switch current comparator trips and turns off the top power switch. The peak inductor current at which the top switch turns off is controlled by the voltage on the V_C pin. The error amplifier servos the V_C node by comparing the voltage on the OUTS pin to the reference voltage on the SET pin, which is set by the user with a resistor from the SET pin to the ground. When the load current increases, it causes a reduction in the OUTS voltage relative to the reference, leading the error amplifier to raise the V_C voltage until the average inductor current matches the new load current. When the top power switch turns off, the synchronous power switch turns on until the next clock cycle begins or the inductor current falls to zero (only in pulse-skipping mode). If overload conditions result in more than 1.5A (LT83401)/2.4A (LT83402) flowing through the bottom switch, the next clock cycle is delayed until the switch current returns to a safe level.

The LT83401/LT83402 features third-generation Silent Switcher technology, which combines an ultra-low-noise current reference with previous-generation Silent Switcher technology. The output voltage can be programmed with a single resistor, providing unity-gain operation over the output range, and resulting in virtually constant ultra-low output noise independent of the output voltage.

If the EN/UVLO pin is below 0.2V, the LT83401/LT83402 shuts down and draws 45µA from the input. When the EN/UVLO pin rises above 0.75V, the switching regulator becomes active.

To improve efficiency at light loads, the LT83401/LT83402 can operate in pulse-skipping mode in light load situations. The SYNC/MODE pin is connected to ground to use pulse-skipping operation and connected to $INTV_{CC}$ or to a voltage higher than 1.5V or floated to use FCM. If a clock is applied to the SYNC pin, the part synchronizes to an external clock frequency and operates in FCM.

The LT83401/LT83402 can operate in FCM for fast transient response and full frequency operation over a wide load range. When in FCM, the oscillator operates continuously, and positive SW transitions are aligned to the clock. Negative inductor current is allowed. In this mode, the LT83401/LT83402 can sink current from the output and return this charge to the input, improving load-step transient response.

The V_C pin allows the loop compensation of the switching regulator to be optimized based on the programmed switching frequency, allowing for a fast transient response.

Downloaded from Arrow.com.

APPLICATIONS INFORMATION

Low-Frequency Output Noise

The LT83401/LT83402 offers many advantages with respect to noise performance in the low-frequency range (<100kHz). Conventional step-down regulators have several sources of low-frequency noise. The most critical noise sources for a conventional regulator are its reference, error amplifier, noise from the resistor divider network used for setting output voltage, and the noise gain created by this resistor divider.

Unlike most step-down regulators, the LT83401/LT83402 does not use a voltage reference. Instead, it uses a 100µA current reference. One problem that conventional step-down regulators face is that the resistor divider setting the output voltage gains up the reference noise. In contrast, the current reference architecture employed by the LT83401/LT83402 allows unity-gain operation to avoid gaining up the noise from the reference to the output. Therefore, if a capacitor bypasses the SET pin resistor, the output noise is independent of the programmed output voltage.

The resultant output noise is primarily set by the error amplifier's noise, typically $4nV/\sqrt{Hz}$ from 10kHz to 1MHz. With the error amplifier operating at such low noise levels, the drive stage noise of the step-down regulator may become a non-negligible contributor to the output noise. The loop gain of the regulator gains down the drive stage noise; therefore, the choice of the compensation network determines the drive stage noise contribution.

In general, choosing a compensation network that achieves good transient performance ensures that the drive stage noise contribution is minimized. The *Frequency Compensation* section provides guidelines on how to choose appropriate compensation. When choosing compensation, it is essential to ensure that the loop has a good phase margin to prevent peaking in the closed-loop response. Peaking in the closed-loop response gains up the noise, which should be avoided.

Filtering Switching Ripple and High-Frequency Noise

The LT83401/LT83402 is a switching regulator that exhibits the typical artifacts of a switching regulator at the output, namely a ripple at the fundamental switching frequency and high-frequency spikes associated with the fast switching edges. While the output capacitor absorbs some of these spikes, the capacitor's Equivalent series inductance (ESL) limits its ability to do so at high frequencies. Additional filtering at the output in the form of feedthrough capacitors, ferrite beads, or an additional LC filter stage is recommended to eliminate these high-frequency spikes and significantly reduce switching ripple.

If additional switching ripple reduction is required while retaining a fast transient response, ferrite beads, a Printed circuit board (PCB) trace, or feedthrough capacitors may be used. For feedthrough capacitors, ensure sufficient feedthrough capacitors are paralleled to carry the required load current. *Figure 47* shows an example where two 1.5A-rated feedthrough capacitors are used for additional switching ripple suppression to deliver up to 3A at the output. In practice, this is limited to 1A for the LT83401 and 2.5A for the LT83402.

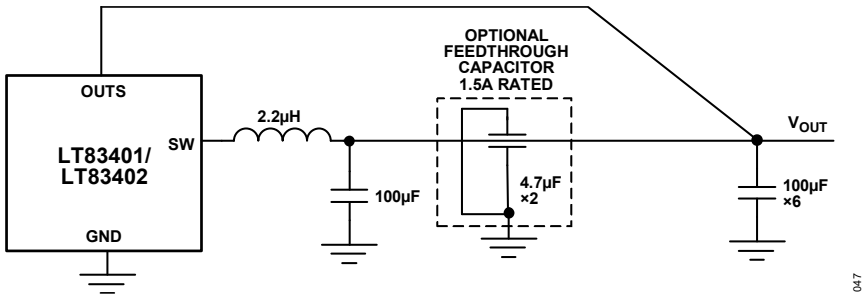

Figure 47. Additional Output Ripple Filtering Using Feedthrough Capacitors

Downloaded from Arrow.com.

If the transient performance is not critical, other passive filter solutions can be realized using a physical inductor as a larger second L and additional output capacitance for the second C, as shown in *Figure 48*.

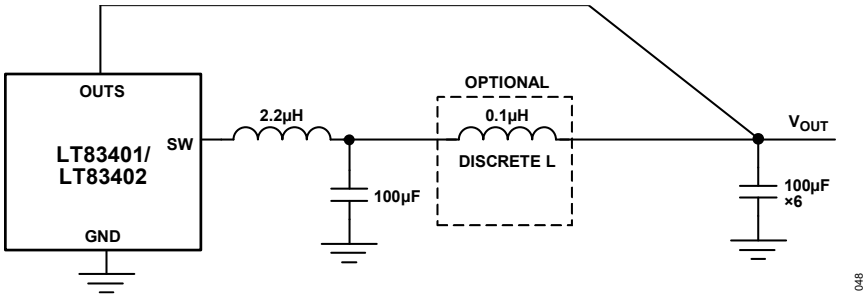

Figure 48. Additional Output Ripple Filtering Using a Second LC Filter

When designing an additional filter for further attenuation of the switching ripple, it is highly recommended to design with LTpowerCAD® to ensure the design is stable, has a good phase margin, and provides sufficient attenuation at the switching frequency of interest.

The Silent Switcher 3 architecture enables achieving excellent noise performance from low to high frequencies at the output of the LT83401/LT83402 while utilizing only passive filtering.

PCB Layout Recommendations

The LT83401/LT83402 is specifically designed to minimize low-frequency (10Hz to 100kHz) noise and EMI emissions, and maximize efficiency when switching at high frequencies. For optimal performance, the LT83401/LT83402 can use multiple V_{IN} bypass capacitors.

Two small capacitors are placed as close as possible to the LT83401/LT83402 V_{IN} pins. The third capacitor, with a larger value of 4.7µF or higher, should be placed near one of these two capacitors. For a recommended PCB layout, see *Figure 49*.

For more details and PCB design files, refer to the *EVAL-LT83401/EVAL-LT83402* user guide. Note that large, switched currents flow in the LT83401/LT83402 V_{IN} and GND pins and the input capacitors. The loops formed by the input capacitors should be as small as possible by placing the capacitors adjacent to the V_{IN} and GND pins. Capacitors with small case sizes, such as 0402 or 0603, are optimal due to their low parasitic inductance. Special care must be taken with the input capacitors to ensure they have a low-impedance return path to the IC ground. This is achieved by placing several grounds through the GND side of the input capacitors such that the ground plane is utilized to full advantage. This should be an unbroken ground plane with a solid connection to the exposed pad of the IC, as shown in *Figure 49*.

Downloaded from Arrow.com.

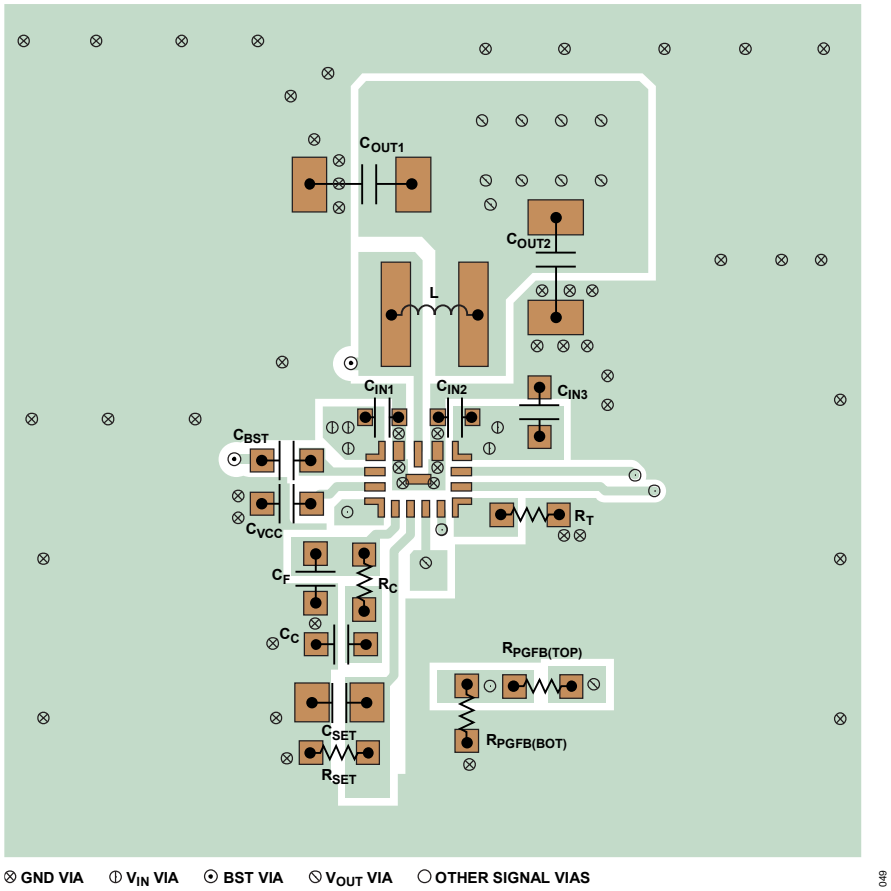

Figure 49. LT83401/LT83402 Suggested Layout

The main inductor and output capacitors should be placed on the same side of the circuit board as the IC, and their connections should be made on that layer. The impedance of the output bulk capacitor's return path to IC ground should also be minimized through the generous use of ground vias. Care with ground layout prevents switching currents from the input capacitors coupling to the output through the ground, which can introduce unintentional perturbations onto the OUTS pin. A small capacitor may also be placed locally to decouple the OUTS pin if needed.

An additional LC filter, if used, can be placed on the other side of the circuit board for optimal EMI performance, though this is not required. Place a local unbroken ground plane under the application circuit on the layer closest to the surface layer. The SW and BST nodes should be as small as possible. Finally, keep the OUTS, PGFB, and RT nodes small so that the ground traces shield them from the SW and BST nodes. The OUTS, PGFB, and RT traces should not pass underneath the main inductor and should also be kept away from the inductor vias.

The exposed pad on the bottom of the package should be soldered to the PCB to reduce thermal resistance to the ambient. To keep the thermal resistance low, extend the ground plane from the GND as much as possible, and add thermal vias to additional ground planes within the circuit board and on the bottom side.

The current reference architecture of the LT83401/LT83402 allows a remote sense of the negative terminals of the load, in addition to the positive terminal. Note the via on the ground side of the R_{SET} and C_{SET} going to the ground side of the C_{OUT}, which can be configured for remote sense of the negative terminal of a load placed further away. For more information on implementing remote sense for the LT83401/LT83402, see the *Output Sensing and Stability* section.

Downloaded from Arrow.com.

Forced Continuous Mode (FCM)

The LT83401/LT83402 can operate in FCM for fast transient response and full-frequency operation over a wide load range. When in FCM, the oscillator operates continuously, and positive SW transitions are aligned to the clock. Negative inductor current is allowed at light loads or under large transient conditions. In this mode, the LT83401/LT83402 can sink current from the output and return this charge to the input, improving load-step transient response (for a comparison of pulse-skip mode and FCM, see *Figure 50*). At light loads, FCM operation is less efficient than pulse-skipping operation, but it may be useful in applications where it is necessary to keep switching harmonics out of the signal band. FCM must be used if the output is required to sink current. To enable FCM, connect the pin to $INTV_{CC}$ or > 1.5V, or float the pin.

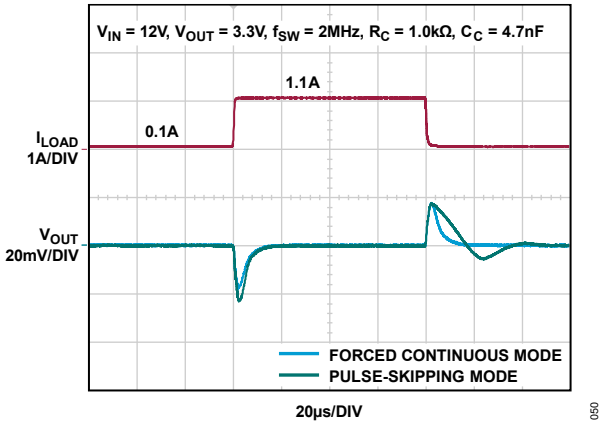

Figure 50. Load Step Transient Response with and without FCM. See Typical Application Circuit (Figure 59)

FCM is disabled under V_{IN} overvoltage conditions (V_{IN} pin is held above 42V), if V_{OUT} is too high (PGFB pin is held greater than 537.5mV) and during start-up until the voltage on V_{OUT} has charged up to ~97.5% of its final value (as indicated when the PGFB pin rises to above 487mV). For the latter two conditions, it is assumed the PGFB pin is connected to the output voltage through an appropriate resistor divider. When FCM is disabled in these ways, negative inductor current is not allowed, and the LT83401/LT83402 operate in pulse-skipping mode.

Pulse-Skipping Mode

When not operating in FCM, the LT83401/LT83402 operates in pulse-skipping mode. In this mode, the oscillator operates continuously, and all switching cycles are aligned to the clock. The negative inductor current is not allowed in this mode; therefore, at light loads, the LT83401/LT83402 may be operating in discontinuous mode. Additionally, in pulse-skipping mode, the LT83401/LT83402 may also skip switching cycles at very light loads for improved efficiency or at very high duty cycles to achieve better dropout. To enable pulse-skipping mode, connect the SYNC/MODE pin to GND.

Synchronization

To synchronize the LT83401/LT83402 oscillator to an external frequency, connect a square wave to the SYNC/MODE pin. The square wave amplitude should have valleys below 0.7V and peaks above 1.5V (up to 6V), with a minimum on-time and off-time of 50ns.

While synchronized to an external clock, the part runs in FCM to maintain regulation. The LT83401/LT83402 can be synchronized over a 300kHz to 6MHz range. The R_T resistor should be chosen to set the LT83401/LT83402 switching frequency to be equal to the lowest synchronization input frequency. The slope compensation is set by the R_T value, while the minimum slope compensation required to avoid subharmonic oscillations is established by the inductor size, input voltage, and output voltage. Since the synchronization frequency does not change the inductor current

Downloaded from Arrow.com.

waveform slopes, if the inductor is large enough to avoid subharmonic oscillations at the frequency set by R_T, then the slope compensation is sufficient for all synchronization frequencies.

Setting the Switching Frequency

The LT83401/LT83402 uses a constant-frequency Pulse width modulation (PWM) architecture that is programmed to switch from 300kHz to 6MHz by using a resistor connected from the R_T pin to GND.

The R_T resistor required for the desired switching frequency is calculated by Equation 1.

$$R_T = \frac{118.41}{f_{SW}} - 11.7 \qquad (1)$$

where R_T is in kΩ and f_{SW} is the desired switching frequency in MHz. *Table 4* shows the necessary R_T value for the desired switching frequency.

Table 4. SW Frequency vs. R_T Value

f_{SW} (MHz)	R_T (kΩ)
0.3	412
0.4	301
0.5	237
0.6	191
0.7	162
0.8	140
0.9	121
1.0	107
1.2	88.7
1.4	73.2
1.6	61.9
1.8	53.6
2	47.5
2.5	35.7
3	27.4
3.5	22.1
4	17.8
6	8.25

Operating Frequency Selection and Trade-Offs

Selection of the operating frequency is a trade-off between efficiency, component size, and input voltage range. The advantage of high-frequency operation is that smaller inductor and capacitor values may be used. The disadvantages are lower efficiency and a smaller input voltage range. The highest switching frequency ($f_{SW(MAX)}$) for a given application can be calculated by Equation 2.

$$f_{SW(MAX)} = \frac{V_{OUT} + V_{SW(BOT)}}{t_{ON(MIN)}\,(V_{IN} - V_{SW(TOP)} + V_{SW(BOT)})} \qquad (2)$$

Downloaded from Arrow.com.

where V_{IN} is the typical input voltage, V_{OUT} is the output voltage, $V_{SW(TOP)}$ and $V_{SW(BOT)}$ are the internal switch drops (~0.28V and ~0.14V respectively at maximum load), and $t_{ON(MIN)}$ is the minimum top switch on-time (see the *Electrical Characteristics* table). This equation shows that a slower switching frequency is necessary to accommodate a high V_{IN}/V_{OUT} ratio.

For transient operation, V_{IN} may reach as high as the absolute maximum rating of 42V regardless of the R_T value. However, the LT83401/LT83402 reduces the switching frequency as necessary to maintain control of the inductor current ensuring safe operation.

In pulse-skipping mode, the LT83401/LT83402 is capable of a maximum duty cycle of approximately 98%, and the V_{IN}-to-V_{OUT} dropout is limited by the $R_{DS(ON)}$ of the top switch, provided there is sufficient headroom (~0.9V) between V_{IN} and SET for the current reference circuit to function correctly. In this mode, the LT83401/LT83402 skips switch-off-time cycles, resulting in a lower switching frequency than programmed by R_T. The LT83401/LT83402 switch as frequently as necessary to keep the boost capacitor refreshed, with a minimum switching frequency of approximately 80kHz. Note that higher switching frequencies increase the minimum input voltage below which cycles are dropped to achieve a higher duty cycle. To achieve better dropout performance independent of the current reference's ~0.9V headroom requirement, connect OUTS to V_{OUT} via an external resistor divider (see *Figure 53*). For instance, in a $12V_{OUT}$ application, a 2:1 divider yields 6V at OUTS, ensuring V_{IN}-to-V_{SET} > 0.9V across the operating range. See *Figure 23* for more details.

In FCM, the LT83401/LT83402 does not skip cycles, and so the maximum duty cycle is limited by the minimum off time and chosen switching frequency. For applications that cannot allow deviation from the programmed switching frequency at low V_{IN}/V_{OUT} ratios and must therefore operate in FCM, use Equation 3 to set the switching frequency.

$$V_{IN(MIN)} = \frac{V_{OUT} + V_{SW(BOT)}}{1 - f_{SW} \times t_{OFF(MIN)}} - V_{SW(BOT)} + V_{SW(TOP)} \qquad (3)$$

where $V_{IN(MIN)}$ is the minimum input voltage without skipped cycles, V_{OUT} is the output voltage, $V_{SW(TOP)}$ and $V_{SW(BOT)}$ are the internal switch drops (~0.28V/0.7V and ~0.14V/0.34V, respectively, at maximum load), f_{SW} is the switching frequency (set by R_T), and $t_{OFF(MIN)}$ is the minimum switch off-time.

Inductor Selection and Maximum Output Current

The LT83401/LT83402 is designed to minimize solution size by allowing the inductor to be chosen based on the output load requirements of the application. During overload or short-circuit conditions, the LT83401/LT83402 safely tolerate operation with a saturated inductor through the use of a high-speed peak-current mode architecture.

A good starting point for the inductor value is given by Equation 4.

$$L = \left(\frac{V_{OUT} + V_{SW(BOT)}}{f_{SW}}\right) \times 1.2 \qquad (4)$$

where f_{SW} is the switching frequency in MHz, V_{OUT} is the output voltage, $V_{SW(BOT)}$ is the bottom switch drop (~0.14V/0.34V, and L is the inductor value in µH).

To avoid overheating and poor efficiency, choose an inductor with an RMS current rating that is greater than the maximum expected output load of the application.

In addition, the saturation current rating (typically labeled I_{SAT}) of the inductor must be higher than the load current plus ½ of the inductor ripple current. See Equation 5.

$$I_{L(PEAK)} = I_{LOAD(MAX)} + \frac{1}{2}\Delta I_L \qquad (5)$$

Downloaded from Arrow.com.

where ΔI_L is the inductor ripple current as calculated in Equation 7, and $I_{LOAD(MAX)}$ is the maximum output load for a given application.

As a quick example, an application requiring 1A output should use an inductor with an RMS rating of greater than 1A and an I_{SAT} of greater than 2A. During long-duration overload or short-circuit conditions, the inductor's RMS rating requirement is greater to avoid overheating the inductor. To keep the efficiency high, the series resistance (DCR) should be less than 135mΩ, and the core material should be intended for high-frequency applications.

The LT83401/LT83402 limits the peak switch current to protect the switches and the system from overload faults.

The top switch current limit ($I_{PEAK\text{-}LIMIT}$) is 2.2A (LT83401)/4A (LT83402) at low duty cycles and decreases linearly to 1.8A (LT83401)/3.2A (LT83402) at a duty cycle = 80%.

The inductor value must be sufficient to supply the desired maximum output current ($I_{OUT(MAX)}$), which is a function of the top switch current limit ($I_{PEAK\text{-}LIMIT}$) and the ripple current (see Equation 6).

$$I_{OUT(MAX)} = I_{PEAK-LIMIT} - \frac{\Delta I_L}{2} \qquad (6)$$

The peak-to-peak ripple current in the inductor can be calculated using Equation 7.

$$\Delta I_L = \frac{V_{OUT}}{L \times f_{SW}} \times \left(1 - \frac{V_{OUT}}{V_{IN(MAX)}}\right) \qquad (7)$$

where f_{SW} is the switching frequency of the LT83401/LT83402, and L is the value of the inductor. Therefore, the maximum output current that the LT83401/LT83402 delivers depends on the switch current limit, the inductor value, and the input and output voltages. The inductor value may have to be increased if the inductor ripple current does not allow sufficient maximum output current ($I_{OUT(MAX)}$) given the switching frequency and maximum input voltage used in the desired application.

The optimum inductor for a given application may differ from the one indicated by this design guide. A larger-value inductor provides a higher maximum load current and reduces the output voltage ripple. For applications requiring smaller load currents, the value of the inductor may be lower, and the LT83401/LT83402 may operate with a higher ripple current. This allows the use of a physically smaller inductor or one with a lower DCR, resulting in higher efficiency. Be aware that low inductance may result in discontinuous operation in pulse-skip mode, which further reduces the maximum load current.

For more information about maximum output current and discontinuous operation, refer to the Application Note 44: *LT1074/LT1076 Design Manual*.

For duty cycles greater than 50% (V_{OUT}/V_{IN} > 0.5), a minimum inductance is required to avoid sub-harmonic oscillation. For more information, refer to the Application Note 19*: LT1070 Design Manual*. Equation 8 calculates the minimum inductance, where I_{SC} represents the slope compensation coefficient. I_{SC} is 0.4 for LT83401 and 0.8 for LT83402.

$$L_{MIN} = \frac{V_{IN}(2 \times DC - 1)}{I_{SC} \times f_{SW}} \qquad (8)$$

where DC is the duty cycle ratio (V_{OUT}/V_{IN}), and f_{SW} is the switching frequency.

Downloaded from Arrow.com.

Overcurrent Protection (OCP)

The LT83401/LT83402 protects against overload and output short-circuit conditions by cycle-by-cycle current limiting, both the current through the top and bottom switches.

Current is sensed in the top switch when it is on. The top switch is immediately turned off when the top switch current limit ($I_{PEAK-LIMIT}$) is detected, and the bottom switch is turned on. Current is also sensed in the bottom switch when it is on, and the top switch is not allowed to turn back on unless the current through the bottom switch has dropped below the bottom switch current limit ($I_{VALLEY-LIMIT}$). This effectively stretches the switching period and lowers the frequency for as long as the protection is required, as the top switch will not be allowed to turn on at the oscillator clock edge until the bottom switch current drops below $I_{VALLEY-LIMIT}$. This limits the average current during an output short-circuit condition to the RMS average of $I_{PEAK-LIMIT}$ and $I_{VALLEY-LIMIT}$.

Input Capacitors

The V_{IN} of the LT83401/LT83402 should be bypassed with at least three ceramic capacitors for best performance. Two small ceramic capacitors can be placed close to the part (C_{IN1}, C_{IN2}). These capacitors should be 0402 in size.

Note that a larger input capacitance is required when a lower switching frequency is used. If the input power source has a high impedance or there is significant inductance due to long wires or cables, additional bulk capacitance may be necessary. This can be provided with a low-performance electrolytic capacitor.

A ceramic input capacitor combined with trace or cable inductance forms a high-quality (underdamped) tank circuit. If the LT83401/LT83402 are plugged into a live supply, the input voltage can ring to twice its nominal value, possibly exceeding the LT83401/LT83402's voltage rating. This situation is easily avoided. For more information, refer to the Application Note 88: *Ceramic Input Capacitors Can Cause Overvoltage Transients*.

Output Capacitor and Output Ripple

The output capacitor has two essential functions. Along with the inductor, it filters the square wave generated by the LT83401/LT83402 to produce the DC output. In this role, it determines the output ripple; thus, a low impedance at the switching frequency is important. The second function is to store energy to satisfy transient loads and stabilize LT83401/LT83402's control loop. Ceramic capacitors have very low ESR and provide the best ripple performance. For good starting values, see the *Typical Applications* section.

Use X5R or X7R types. This choice provides low output ripple and good transient response. Transient performance can be improved with a higher-value output capacitor. Increasing the output capacitance also decreases the output voltage ripple. A lower value of the output capacitor is used to save space and cost, but transient performance suffers, resulting in loop instability. For the suggested capacitor values, see the *Typical Applications* section.

When choosing a capacitor, special attention should be given to the data sheet to calculate the effective capacitance under the relevant operating conditions of voltage bias and temperature. A physically larger capacitor or one with a higher voltage rating may be required.

The LT83401/LT83402 typically operates at a switching frequency of 2MHz. *Table 5* shows some examples of output capacitors with ideal frequency characteristics when operating at switching frequencies around 2MHz. *Figure 51* shows the frequency characteristics of these capacitors. It can be seen that a combination of these capacitors minimizes the impedance at the switching frequency on the output and keeps the impedance low enough to suppress any higher-frequency harmonics near the switching frequency, thus achieving the lowest output ripple.

Downloaded from Arrow.com.

Table 5. Examples of Output Capacitors with Desirable Frequency Characteristics for 2MHz Operation

PART DESCRIPTION	MANUFACTURER/PART NUMBER
22µF, X7R, 10V, 20% 1206	MURATA, GRM31CR71A226ME15K
10µF, X7R, 25V, 10% 1206	MURATA, GRM31CR71E106KA12
4.7µF, X7S, 16V, 10% 0603	MURATA, GRM188C71C475KE21

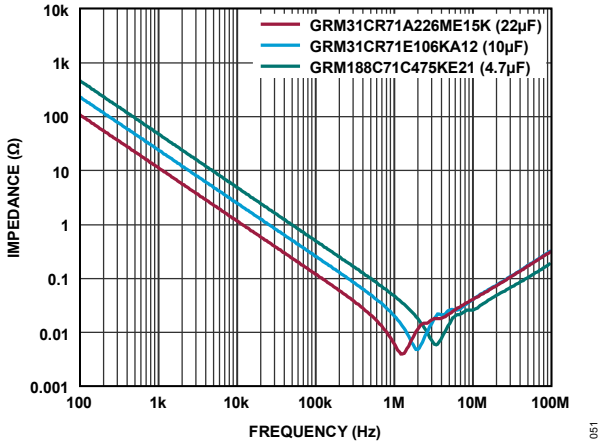

Figure 51.Frequency Characteristics of Example Output Capacitors for 2MHz Operation

Output Voltage

The LT83401/LT83402 incorporates a precision 100µA current source flowing out of the SET pin, which also connects to the error amplifier's non-inverting input. *Figure 52* shows that connecting a resistor from SET to GND generates a reference voltage for the error amplifier. This reference voltage is simply the product of the SET pin current and the SET pin resistor. The error amplifier's unity-gain configuration produces a low-impedance version of this voltage on its inverting input, the OUTS pin, which is externally connected to the output voltage of the circuit.

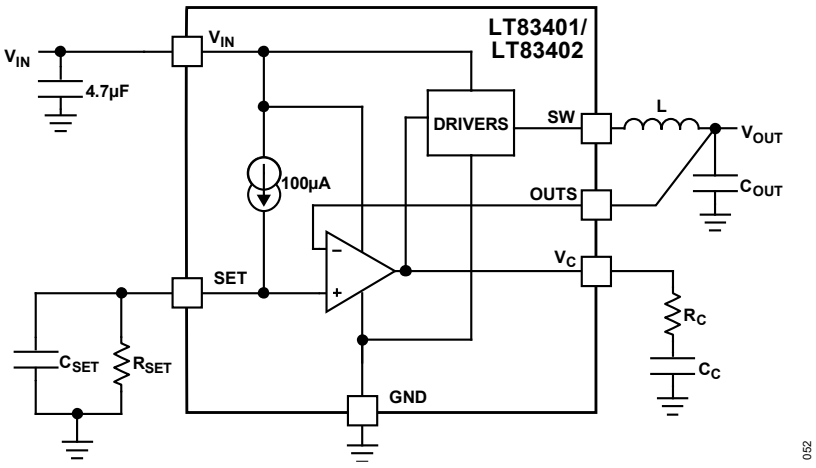

Figure 52. Adjustable Reference for Error Amplifier

The LT83401/LT83402's error amplifier and current reference allow for a wide output voltage range from 0V (using a 0Ω resistor) to 15V. A PNP-based input pair is active from V_{OUT} equals 0V up to V_{IN} minus 1.4V, and an NPN-based input pair is active for output voltages where $V_{IN} - V_{OUT} < 1V$ or less, with a smooth transition between the two input pairs in between these ranges. The PNP-based input pair is designed to offer the best overall performance as it is active in

Downloaded from Arrow.com.

the vast majority of applications. For more information on offset voltage, SET pin current, and output noise, see the *Electrical Characteristics* table. *Table 6* lists many common output voltages and their corresponding 1% R_{SET} resistors. Where the exact resistor value required for the output voltage is not available, two resistors can be paralleled to achieve the desired value. For example, for a 0.8V output voltage, a resistor value of exactly 8kΩ is required. The closest value with a single 1% resistor is 8.06kΩ, with two resistors, 8.25kΩ can be paralleled with 267kΩ to achieve (almost) exactly 8kΩ. 0.1% resistors may be used to achieve higher accuracy.

Table 6. 1% Resistor for Common Output Voltages

V_{OUT} (V)	R_{SET} (kΩ)
0.8	8.06
1	10
1.8	18
2.5	24.9
3.3	33.2
5	49.9
6	60.4
9	90.9
12	120

The benefit of using a current reference compared with a voltage reference, as used in conventional regulators, is that the regulator always operates in a unity gain configuration, independent of the programmed output voltage. This allows the LT83401/LT83402 to have loop gain, frequency response, and bandwidth independent of the output voltage. Moreover, since none of the error amp gain is needed to amplify the SET pin voltage to a higher output voltage, output load regulation is more tightly specified.

Since the zero T_C current source is highly accurate, the SET pin resistor can become the limiting factor in achieving high accuracy. Hence, it should be a precision resistor. Additionally, any leakage paths to or from the SET pin create errors in the output voltage. If necessary, use high-quality insulation (for example, Teflon, Kel-F); moreover, cleaning of all insulating surfaces to remove fluxes and other residues may be required. High-humidity environments may require a surface coating at the SET pin to provide a moisture barrier.

Since the SET pin is a high-impedance node, unwanted signals may couple into the SET pin and cause erratic behavior. This is most noticeable when operating with a minimum output capacitor at heavy load currents. Bypassing the SET pin with a small capacitance to GND resolves this issue—100nF is sufficient. This is the minimum recommended capacitance. In general, a larger capacitance is typically preferred. For more information, see the *SET Pin Capacitor: Noise and Soft-Start* section.

For applications requiring higher accuracy or an adjustable output voltage, the SET pin may be actively driven by an external voltage source capable of sinking 100µA. Connecting a precision voltage reference to the SET pin eliminates any errors present in the output voltage due to the reference current SET pin resistor tolerances.

Downloaded from Arrow.com.

Output Voltages Above 15V

The LT83401/LT83402 can be configured for output voltages above 15V, even though the SET pin voltage is limited to a maximum of 15V, by using a traditional resistor divider from V_{OUT} to OUTS, as shown in *Figure 53*. It is recommended to configure the SET pin voltage to be 15V, in which case the resistor values can be chosen according to Equation 9.

$$R1 = R2f(x) = (x + a)^n = \left(\frac{V_{OUT} - 15V}{15V + R_2 \times I_{OUTS}}\right) \quad (9)$$

The OUTS pin current is 170nA ± 60nA per the *Electrical Characteristics* table. The divider values R1 and R2 can be chosen such that this OUTS pin current variation introduces <0.1% error in output voltage regulation. The thermal noise of the resistors in the resistor divider also adds to the output noise. It is recommended to choose the resistor values such that their impedance as viewed from the SET pin (R1||R2) is less than 5kΩ to keep their noise contribution low compared to the noise contribution of the part itself.

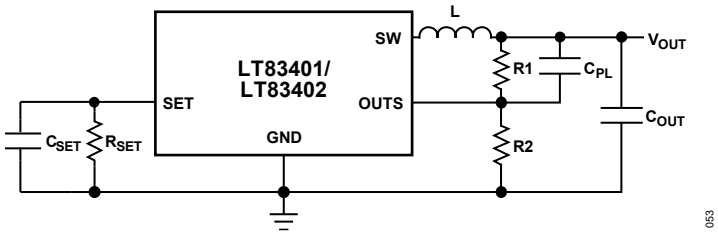

Figure 53. Configuring the LT83401/LT83402 for Output Voltages above 15V

At output voltages above 15V, the low-frequency noise has some dependence on the output voltage, the divider gains up the noise. By configuring the SET voltage to be 15V, this dependency is minimized, for example, the noise gain from a 15V reference to $18V_{OUT}$ is 30 times lower than the gain from a conventional 0.5V voltage reference to $18V_{OUT}$.

High V_{OUT} Considerations

In applications where the output voltage is higher than 20V, refer to the *Reverse Current Considerations* section in *Application Note AN-2582*.

Output Voltages Below 0.5V

Due to the current reference architecture, the LT83401/LT83402 can be configured for output voltages below 0.5V all the way down to 0V. It should be noted that for output voltages below 0.5V, the Power Good and Fast Start-Up functionalities are not available, and these functionalities must be disabled correctly by tying PGFB to $INTV_{CC}$ or to 0.5V.

Output Sensing and Stability

The LT83401/LT83402's OUTS pin provides a Kelvin sense connection to the output. The SET pin resistor's GND side provides a Kelvin sense connection to the load's GND side.

The LT83401/LT83402's internal error amplifier has a relatively high voltage gain of ~2400/2000. Therefore, it is very important to avoid adding extra impedance (ESR and ESL) to the feedback loop and to minimize the noise coupling onto the OUTS pin, as a combination of excessive parasitics and noise injection can cause instability in the system. To that end, minimize the effects of PCB trace and solder inductance by tying the OUTS pin directly to C_{OUT} and the GND side of C_{SET} directly to the GND side of C_{OUT}. If this is not possible, for example, due to a design requiring remote sensing, a small local OUTS capacitor of 150pF or less may be added for noise decoupling at the OUTS pin. For more

Downloaded from Arrow.com.

information on the recommended layout that meets these requirements, refer to the *LT83401/LT83402 demo board manual*.

The LT83401/LT83402 is an externally compensated part, so even if the recommended layout is not followed (sometimes it is not possible due to application-specific limitations), it is possible to choose a more conservative compensation with a lower gain or bandwidth in order to retain stability during operation. However, this is at the expense of a transient response. A superior layout allows a better tradeoff between transient response, phase margin, and output noise performance when selecting compensation values.

Frequency Compensation

The loop compensation determines the stability and transient performance and is provided by the components connected to the V_C pin. Generally, a capacitor (C_C) and a resistor (R_C) in series to ground are used. Designing the compensation network can be complicated, and the best values depend on the application. A practical approach is to start with one of the circuits in this data sheet that is similar to the user's application and tune the compensation network to optimize the performance. LTpowerCAD simulation can help in this process. Stability should then be checked across all operating conditions, including load current, input voltage, and temperature. The *LT1375* data sheet contains a more thorough discussion of loop compensation and describes how to test the stability using a transient load.

Figure 54 shows an equivalent circuit for the LT83401/LT83402 control loop. The error amplifier is a transconductance amplifier with transconductance $g_{m(EA)}$ = 12mS, with finite output impedance. The power section, consisting of the modulator, power switches, and inductor, is modeled as a transconductance amplifier with transconductance G_M = 2.3A/V (LT83401)/3.6A/V (LT83402) generating an output current proportional to the voltage at the V_C pin. Note that the output capacitor integrates this current and that the capacitor on the V_C pin (C_C) integrates the error amplifier output current, resulting in two poles in the loop. A zero is required and comes from a resistor R_C in series with C_C. This simple model works as long as the value of the inductor is not too high and the loop crossover frequency is much lower than the switching frequency. For more information about the compensation of switching mode power supplies, refer to *Application Note 149: Modeling and Loop Compensation Design of Switching Mode Power Supplies*.

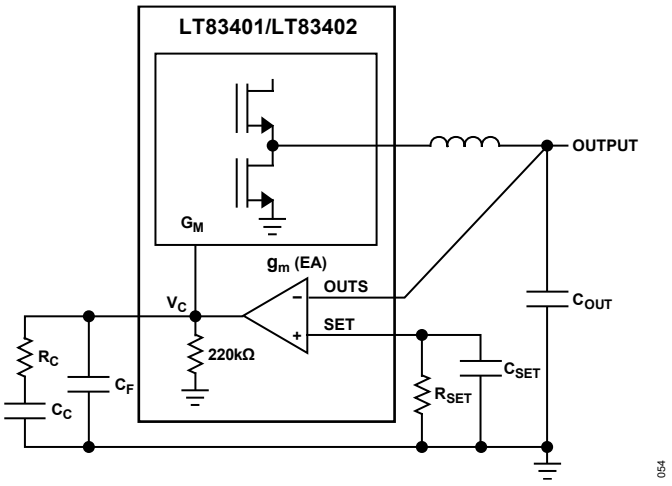

Figure 54. Model for Loop Response

Downloaded from Arrow.com.

EN/UVLO Pin

The LT83401/LT83402 are in shutdown when the EN/UVLO pin is low and active when the pin is high. The rising threshold of the EN/UVLO comparator is 0.75V, with 50mV of hysteresis. The EN/UVLO pin can be connected to V_{IN} if the shutdown feature is not used or tied to a logic level if shutdown control is required. If connecting the EN/UVLO pin to V_{IN} instead of driving it with a digital signal, it is recommended to connect EN/UVLO to V_{IN} through a resistor divider to set an appropriate UVLO threshold. This ensures correct startup and shutdown behavior in the event of rapid power cycling.

When the enable pin drops below 0.7V, the part stops switching, but internal circuitry continues drawing current as the $INTV_{CC}$ regulator is still awake. A full shutdown is guaranteed when the enable pin drops below 200mV. In a full shutdown, the $INTV_{CC}$ regulator is disabled, and the part draws less than 70µA.

Adding a resistor divider from V_{IN} to EN/UVLO programs the LT83401/LT83402 to regulate the output only when V_{IN} is above the required voltage (see the *Block Diagram*). This threshold, $V_{IN(EN)}$, is typically used when the input supply is either current-limited or has a relatively high source resistance. A switching regulator draws constant power from the source, so the source current increases as the source voltage drops. This looks like a negative resistance load to the source and causes the source to current limit or latch low under low source voltage conditions. The $V_{IN(EN)}$ threshold prevents the regulator from operating at source voltages where the problems might occur. This threshold can be adjusted by setting the values of R_{EN1} and R_{EN2} such that they satisfy Equation 10.

$$V_{IN(EN)} = \left(\frac{R_{EN1}}{R_{EN2}} + 1\right) \times 0.75V \qquad (10)$$

where the LT83401/LT83402 remain off until V_{IN} is above $V_{IN(EN)}$. Due to the comparator's hysteresis, switching does not stop until the input falls slightly below $V_{IN(EN)}$.

$INTV_{CC}$ Regulator

An internal low dropout (LDO) regulator produces the 3.4V supply from V_{IN} that powers the drivers and the internal bias circuitry. The $INTV_{CC}$ supplies enough current for the LT83401/LT83402's circuitry. The voltage on $INTV_{CC}$ varies between 2.7V and 3.4V when V_{IN} is between 2.8V and 3.5V. Do not connect an external load to the $INTV_{CC}$ pin.

SET Pin Capacitor: Noise and Soft-Start

In addition to reducing output noise, using a SET pin bypass capacitor reduces the sensitivity to any parasitic coupling of voltage spikes onto the SET pin. Note that any bypass capacitor leakage deteriorates the LT83401/LT83402's DC regulation. Capacitor leakage of even 100nA is a 0.1% DC error. Therefore, it is recommended to use a good quality, low-leakage ceramic capacitor.

Using a SET pin bypass capacitor also soft-starts the output and limits inrush current. Soft-starting the output prevents a current surge on the input supply. The SET pin capacitor and resistor values set the ramp-up time of the reference voltage, and the output voltage tracks this voltage. The SET pin resistor size is determined by the application's required output voltage; however, the capacitor size may be selected to achieve the desired ramp-up time. It is important to consider that the size of the SET pin capacitor also plays a role in noise performance, which is typically the more important factor in determining the size of this capacitor.

Ceramics are manufactured with a variety of dielectrics, each with a different behavior across temperature and applied voltage. Care should be taken when selecting a ceramic capacitor for bypassing the SET pin, as this is a critical component. An X7R (or better) ceramic capacitor is strongly recommended for its superior stability across temperature and DC voltage bias. Additionally, larger case sizes are recommended for better DC bias and AC voltage characteristics.

Downloaded from Arrow.com.

As shown in *Figure 55*, capacitor DC bias characteristics tend to improve as the component case size increases.

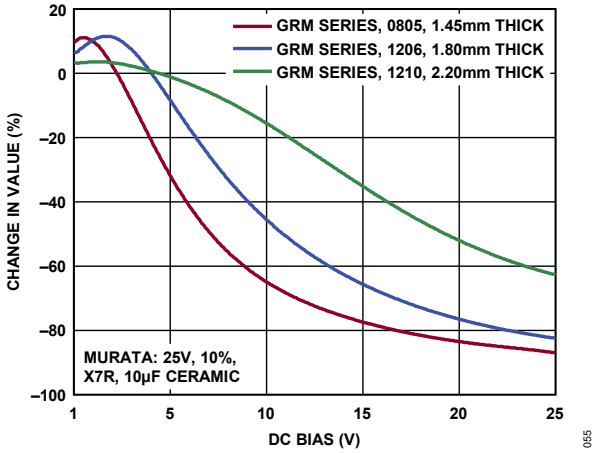

Figure 55. Capacitor Voltage Coefficient for Different Case Sizes

Larger case sizes are also beneficial for improved AC voltage characteristics. Capacitor values are often rated at $1V_{RMS}$ of AC voltage, and can drop significantly when operating near $0V_{RMS}$, which is the operating condition of a bypass capacitor.

As shown in *Figure 56*, larger case sizes tend to experience a smaller capacitance drop when operating near $0V_{RMS}$. Therefore, an 0805 or larger ceramic capacitor should be used for the SET pin bypass capacitor for best performance. A larger required capacitance value may require larger case sizes; for example, a 4.7µF value should use a 1206 or larger.

Table 7 shows some recommended SET pin capacitors.

Table 7. Suggested SET Capacitor Part Numbers

PART DESCRIPTION	MANUFACTURER/PART NUMBER
1µF, X7R, 35V, 0805	MURATA, GRM219R7YA105KA12
4.7µF, X7R, 50V, 1206	MURATA, GRM31CR71H475MA12
10µF, X7R, 100V, 1210	MURATA, GRM32EC72A106KE05

For high vibration environments, non-piezoelectrically responsive capacitors should be used at the SET pin for optimal performance. A piezoelectric ceramic capacitor generates voltage across its terminals due to mechanical stress upon it, induced by mechanical vibrations or thermal transients. Film capacitors are the preferred option. If a ceramic must be used, soft-termination ceramics are available, which reduce the sensitivity to the piezoelectric effect.

Downloaded from Arrow.com.

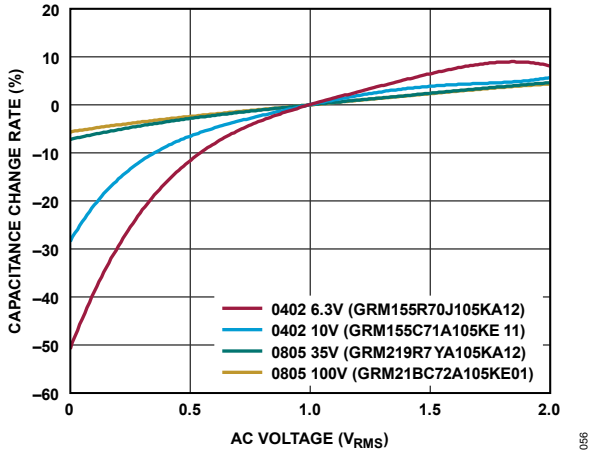

(a) Rated Capacitance = 1µF

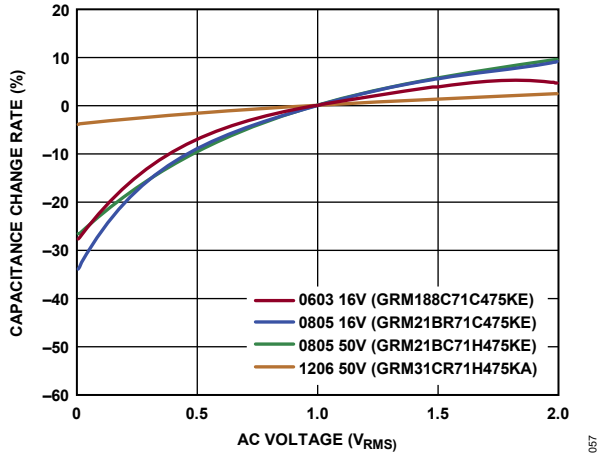

(b) Rated Capacitance = 4.7µF

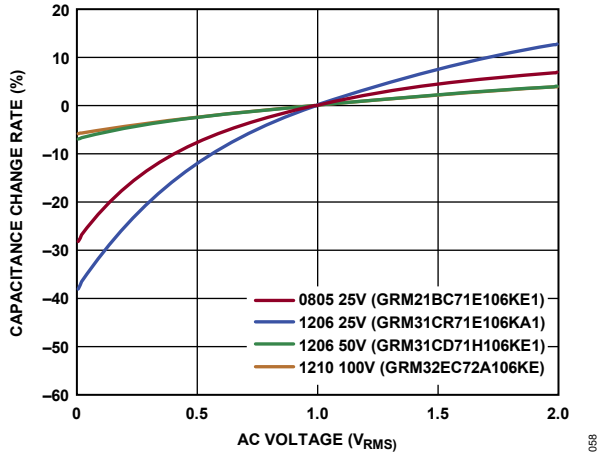

(c) Rated Capacitance = 10µF

Figure 56. AC Voltage Characteristics for Different Capacitor Case Sizes

Downloaded from Arrow.com.

Without fast start-up enabled, the R_C time constant, formed by the SET pin resistor and capacitor, controls soft-start time. Connect the PGFB pin to $INTV_{CC}$ or to 0.5V to disable fast start-up. The ramp-up rate from 0% to 90% of nominal V_{OUT} is given by Equation 11.

$$t_{START_NO_FAST_START-UP} = 2.3 \times R_{SET} \times C_{SET} \qquad (11)$$

With fast-start-up enabled, the start-up time can be significantly reduced, with the ramp-up time from 0% to 90% of the nominal V_{OUT} given by Equation 12. For how the 2.5mA fast start-up current varies with temperature and V_{IN}-V_{SET} differential voltage, see the *Typical Performance Characteristics* section.

$$t_{START_FAST_START-UP} = \frac{100\mu A \times R_{SET} \times C_{SET}}{2.5mA} \qquad (12)$$

In most applications, fast start-up is enabled, in which case a minimum SET capacitor size of 1µF is recommended for preventing reference voltage overcharge as well as ensuring good noise performance.

The SET pin is pulled to ground with a 520Ω MOSFET ($R_{SET\text{-}PULLDOWN}$) during shutdown, thermal shutdown, V_{CC} UVLO, or V_{IN} UVLO. To ensure a soft start when the part exits any of the above conditions, there must have been sufficient time to allow the SET pin to be pulled to close to ground prior to start-up. This time will be a function of the chosen SET pin capacitance and $R_{SET\text{-}PULLDOWN}$.

Fast Start-Up

For ultra-low noise applications that require low 1/f noise (that is, at frequencies below 100Hz), a larger value SET pin capacitor is required, up to 22µF. A larger value capacitor can be used, but care should be taken regarding leakage. While normally larger capacitors significantly increase the regulator's start-up time, the LT83401/LT83402 incorporate fast start-up circuitry that increases the SET pin current to about 2.5mA during start-up.

Upon start-up, the 2.5mA current source remains engaged while PGFB is below the power good start-up threshold ($V_{PGL_STARTUP}$) of 487mV, unless the regulator is in thermal shutdown, V_{IN} is too low, or $INTV_{CC}$ has fallen too low.

The fast start-up circuit is permanently disabled once PGFB rises above $V_{PGL_STARTUP}$ until either the part is powered down, or the part is placed into shutdown by pulling the EN/UVLO pin below 0.75V.

There is one more condition under which the 2.5mA current source is disabled during start-up. The purpose of this is to prevent overcharging V_{SET}. Since the part assumes that the PGFB pin is an accurate indication of the voltage on the SET pin, it assumes that V_{OUTS} follows V_{SET} closely. However, this may not always be the case, for example, if the output capacitance is very large or if, for some reason, the output is temporarily shorted to the GND. Therefore, fast charge is disabled whenever V_{OUTS} is lagging V_{SET} by more than 30mV. This prevents incorrect behavior where the 2.5mA current source stays on even when V_{SET} has risen above its intended final value.

If programmable power good and fast start-up capabilities are not required, the PGFB pin must be connected to either $INTV_{CC}$ or to 0.5V.

Programmable Power Good

As shown in the *Block Diagram*, the power good threshold is user programmable using the ratio of two external resistors, $R_{PGFB(BOT)}$ and $R_{PGFB(TOP)}$ (see Equation 13).

$$V_{OUT(PG_THRESHOLD)} = 0.5V \times \left(1 + \frac{R_{PGFB(TOP)}}{R_{PGFB(BOT)}}\right) + I_{PGFB} \times R_{PGFB(TOP)} \qquad (13)$$

If the PGFB pin increases above 537.5mV or decreases below 462.5mV, the open-drain PG pin asserts and becomes low impedance, indicating power is bad. The power good comparator has a hysteresis of 10mV. The PGFB pin current

Downloaded from Arrow.com.

(I_{PGFB}) from the *Electrical Characteristics* table must be considered when determining the resistor divider network. Note that the programmable power good and fast start-up capabilities are disabled when PGFB is tied to 0.5V or when the device is in shutdown.

The PGFB pin current (I_{PGFB}) can be ignored if $R_{PGFB(BOT)}$ is less than 50kΩ. *Table 8* suggests some 1% PGFB resistor divider values for common V_{OUT} configurations.

Table 8. Suggested PGFB Resistor Divider Values

V_{OUT} (V)	$R_{PGFB(TOP)}$ (kΩ)	$R_{PGFB(BOT)}$ (kΩ)
0.8	29.4	48.7
0.9	39.2	48.7
1	49.9	49.9
1.2	69.8	49.9
1.8	130	49.9
3.3	280	49.9
5	453	49.9

Shorted and Reversed Input Protection

The LT83401/LT83402 tolerates a shorted output. The bottom switch current is monitored such that if the inductor current is beyond safe levels, switching on of the top switch is delayed until the inductor current falls to safe levels.

There is another situation to consider in systems where the output is held high when the input to the LT83401/LT83402 is absent. This occurs in battery charging applications or in battery backup systems where a battery or some other supply is diode ORed with the LT83401/LT83402's output. If the V_{IN} pin is allowed to float and the EN/UVLO pin is held high, then the LT83401/LT83402's internal circuitry pulls its quiescent current through its SW pin. This is acceptable if the system can tolerate the current draw in this state. If the EN/UVLO pin is grounded, the SW pin current drops to ~50µA.

However, if the V_{IN} pin is grounded while the output is held high, regardless of EN/UVLO, parasitic body diodes inside the LT83401/LT83402 can pull current from the output through the SW pin and the V_{IN} pin.

Figure 57 shows a connection of the V_{IN} and EN/UVLO pins, which allows the LT83401/LT83402 to run only when the input voltage is present and protects against a shorted or reversed input.

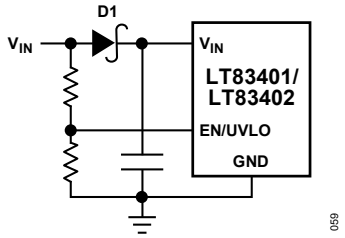

Figure 57. Reverse V_{IN} Protection

Downloaded from Arrow.com.

Thermal Considerations

For higher ambient temperatures, care should be taken in the PCB layout to ensure good heat sinking of the LT83401/LT83402. The exposed pad on the bottom of the package should be soldered to a ground plane. This ground should be connected to large copper layers below with thermal vias; these layers spread the heat dissipated by the LT83401/LT83402. Placing additional vias can reduce thermal resistance further. The maximum load current should be derated as the ambient temperature approaches the maximum junction rating. Power dissipation within the LT83401/LT83402 can be estimated by calculating the total power loss from an efficiency measurement and subtracting the inductor loss. The die temperature is calculated by multiplying the LT83401/LT83402 power dissipation by the thermal resistance from junction to ambient.

The internal overtemperature protection monitors the junction temperature of the LT83401/LT83402. If the junction temperature reaches approximately 165°C, the LT83401/LT83402 stops switching and indicates a fault condition until the temperature drops about 5°C cooler.

The temperature rise of the LT83401/LT83402 is worst when operating at high load, high V_{IN}, and high switching frequency. If the case temperature is too high for a given application, then either V_{IN}, switching frequency, or load current can be decreased to reduce the temperature to an appropriate level. *Figure 58* shows examples of how case temperature rise can be managed by reducing load.

The LT83401/LT83402's top switch current limit decreases with higher duty cycle operation for slope compensation. This also limits the output current the LT83401/LT83402 can deliver for a given application. See *Figure 20* in *Typical Performance Characteristics*.

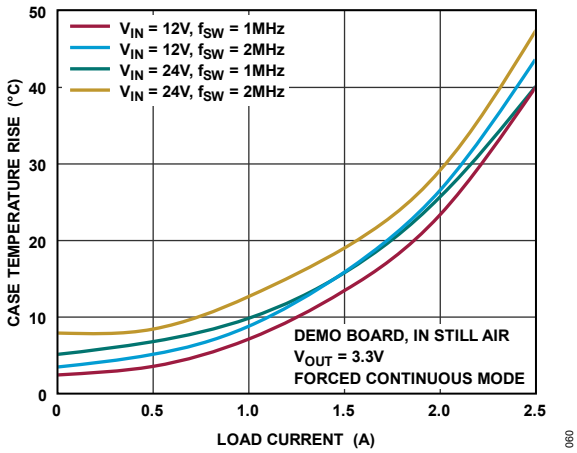

Figure 58. LT83401/LT83402 Case Temperature Rise

Downloaded from Arrow.com.

TYPICAL APPLICATIONS

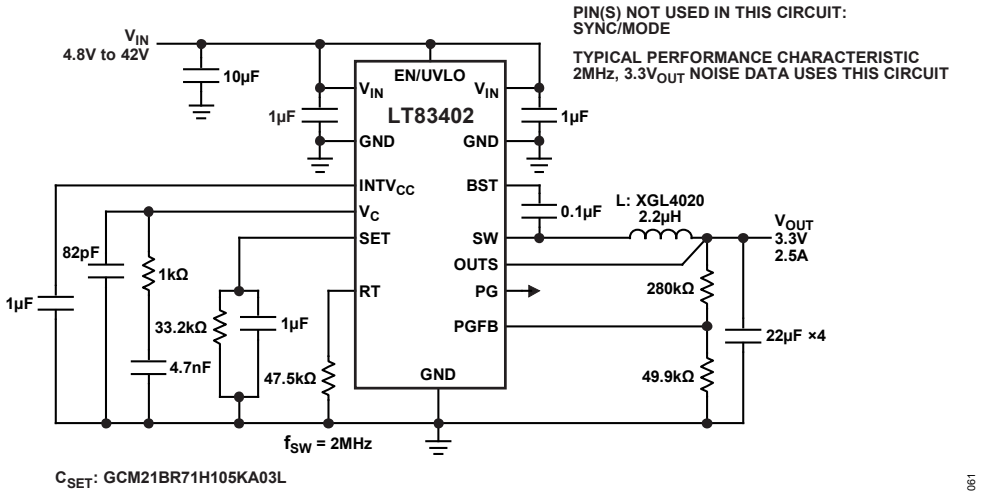

Figure 59. 3.3V 2.5A 2MHz Step-Down Converter with Soft-Start, Fast Start-Up, and Power Good

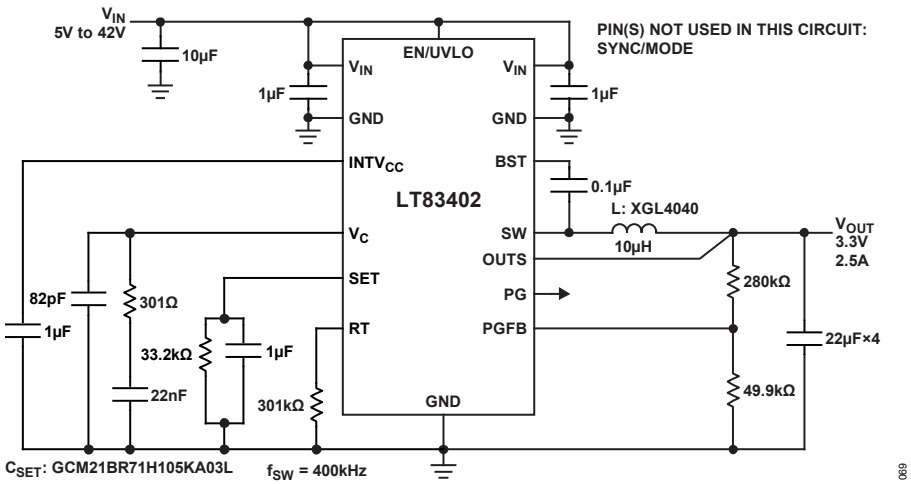

Figure 60. 3.3V 2.5A 400kHz Step-Down Converter with Fast Start-Up and Power Good

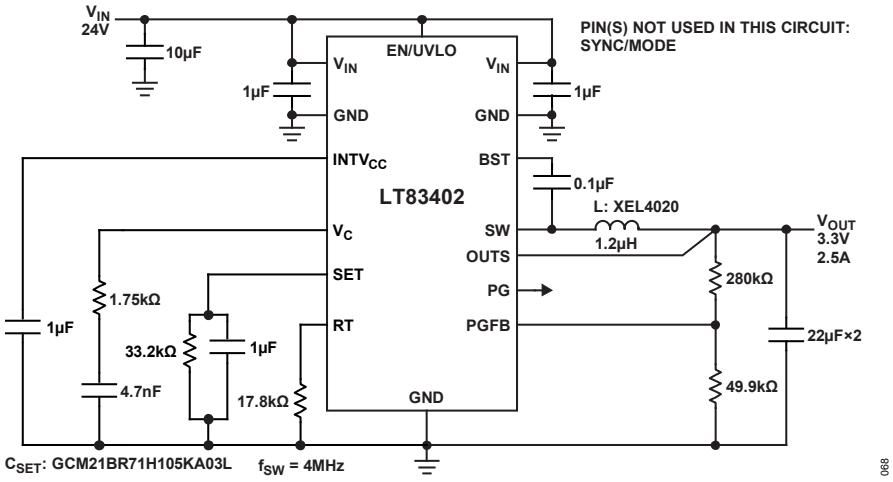

Figure 61. 3.3V 2.5A 4MHz Step-Down Converter with Fast Start-Up and Power Good

Downloaded from Arrow.com.

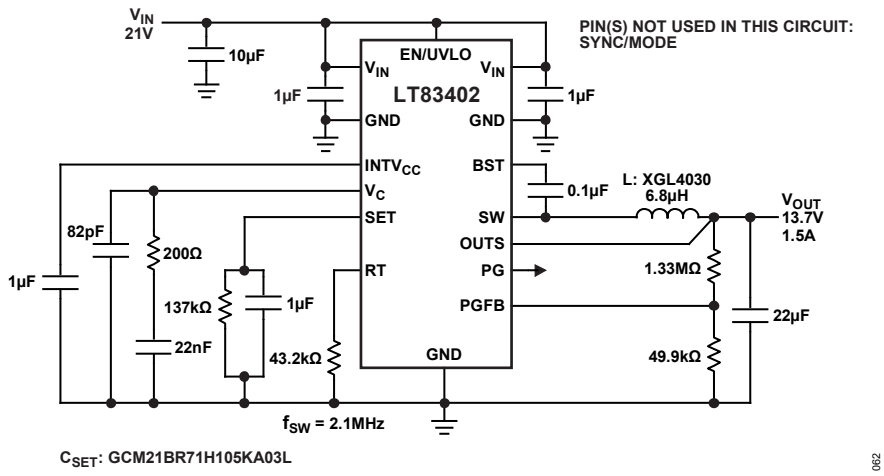

Figure 62. 13.7V 1.5A 2.1MHz Step-Down Converter with Fast Start-Up and Power Good

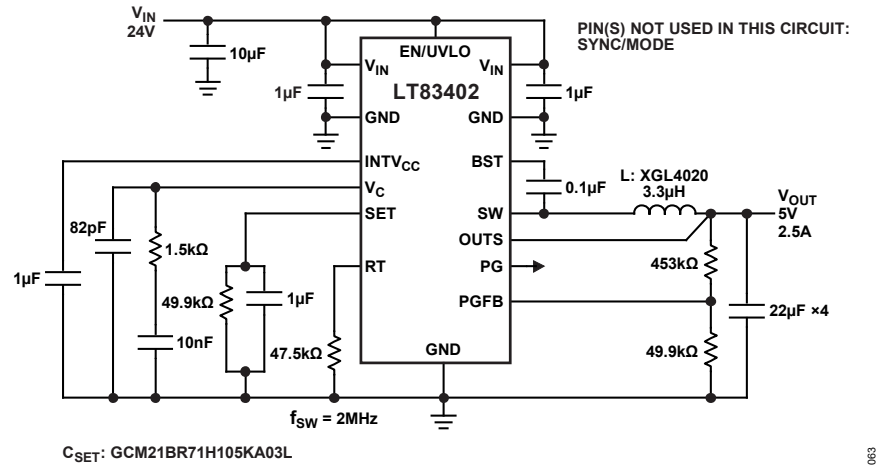

Figure 63. 5V 2.5A 2MHz Step-Down Converter with Fast Start-Up and Power Good

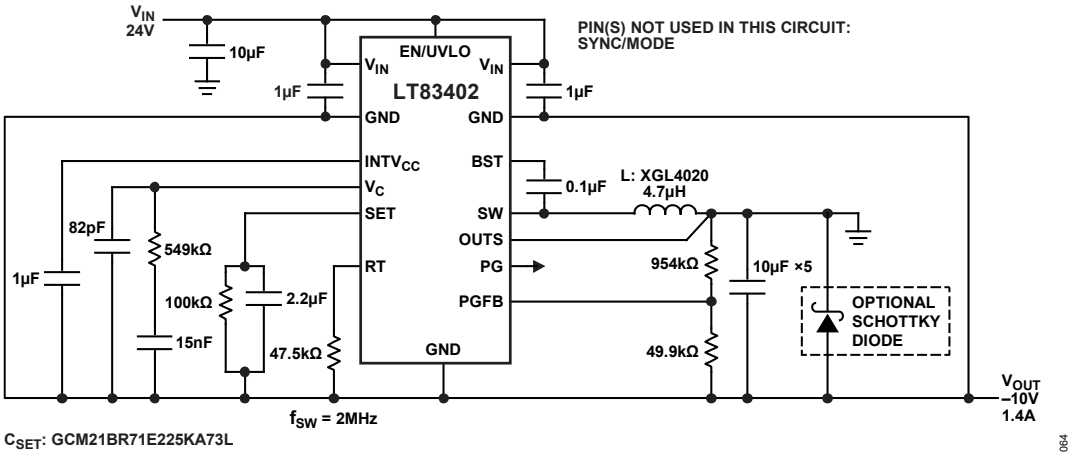

Figure 64. Negative 10V 1.4A 2MHz Step-Down Converter with Fast Start-Up and Power Good

Downloaded from Arrow.com.

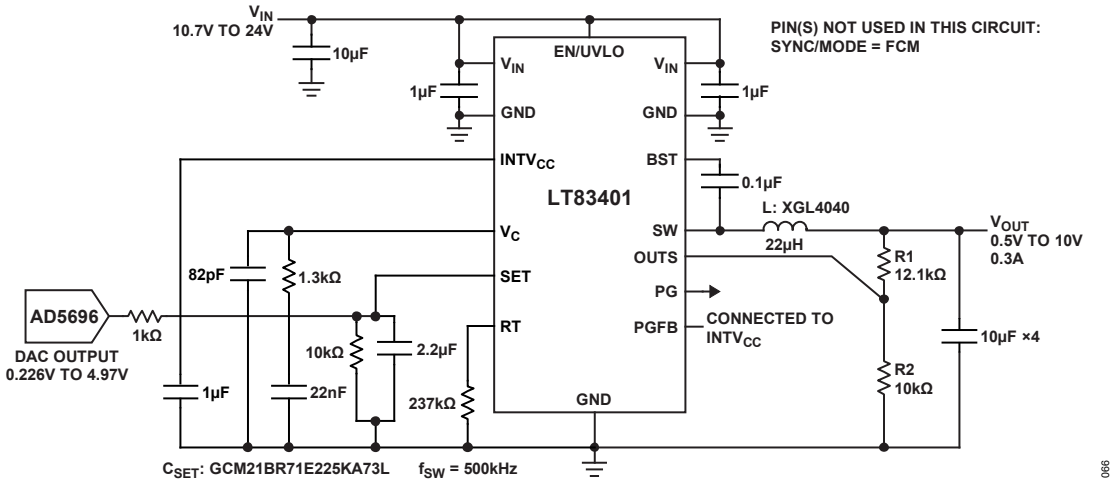

Figure 65. Dynamic Voltage Control 0.5V-10V 500kHz Step-Down Converter with External DAC

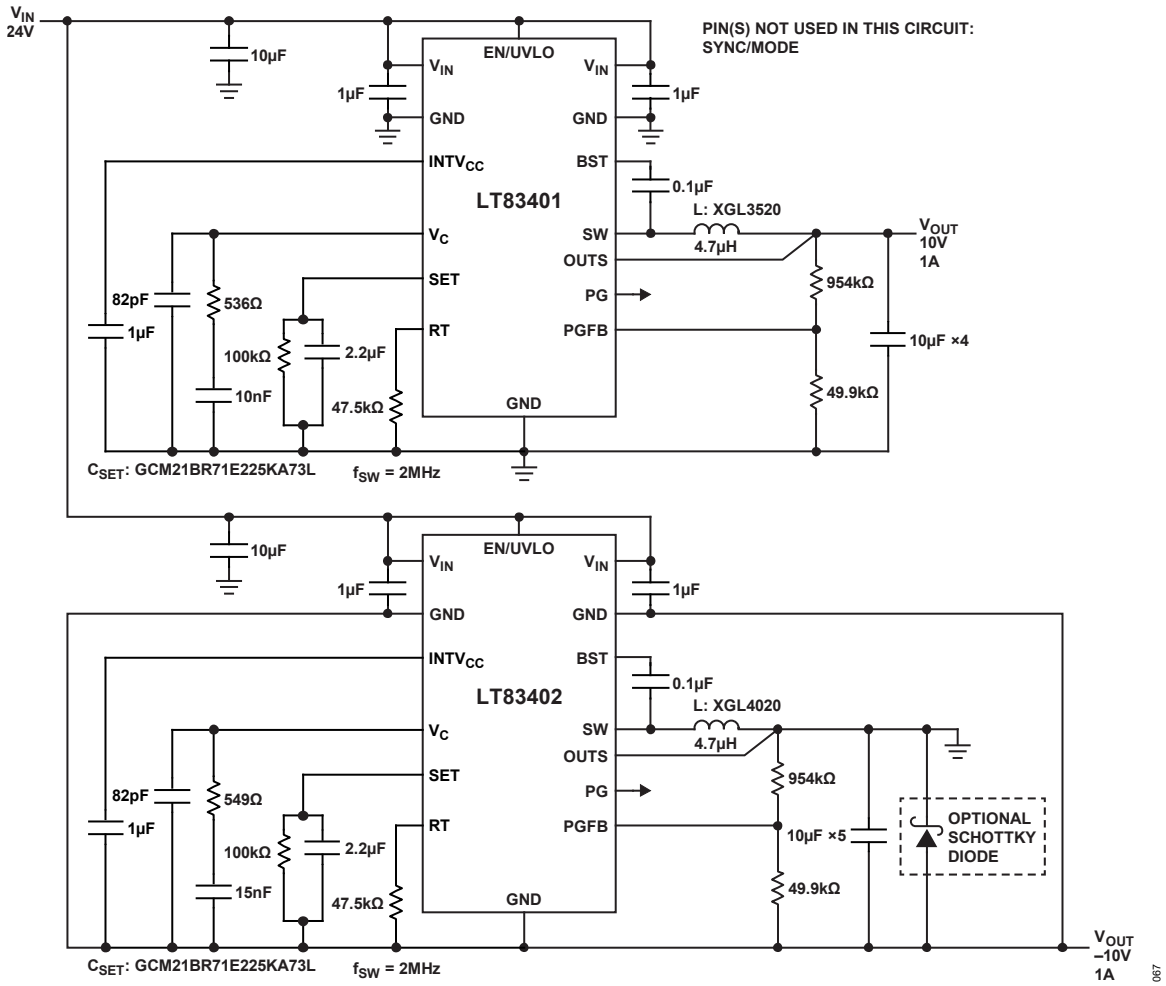

Figure 66. ±10V 1A Step-Down and Inverting Converters for Power Amplifier Biasing in Instrumentation Applications

Downloaded from Arrow.com.

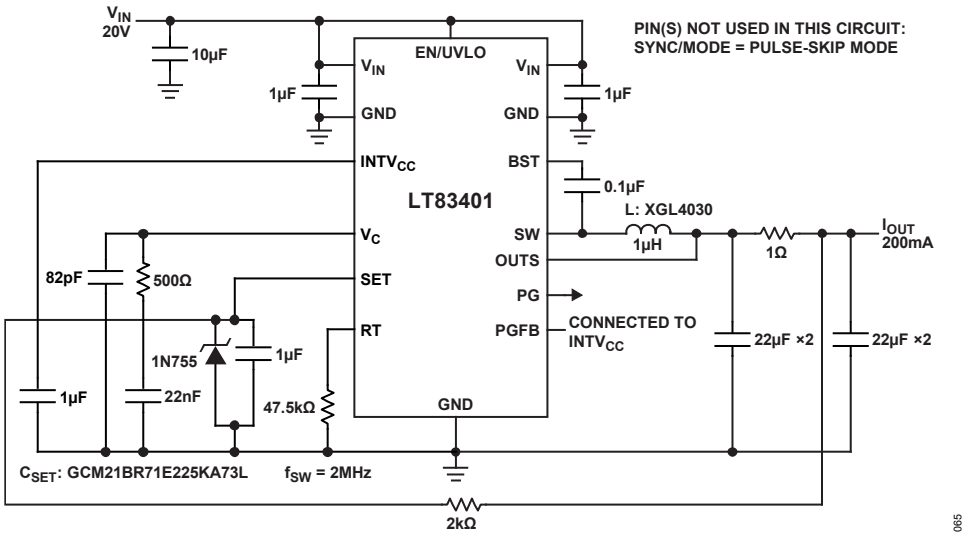

Figure 67. Ultra-Low Noise Current Source for RF Biasing Applications

Downloaded from Arrow.com.

OUTLINE DIMENSIONS

15-Lead Lead Frame Chip Scale Package [LFCSP]
3mm x 2mm Body and 0.75mm Package Height
(CP-15-1)
Dimensions shown in millimeters

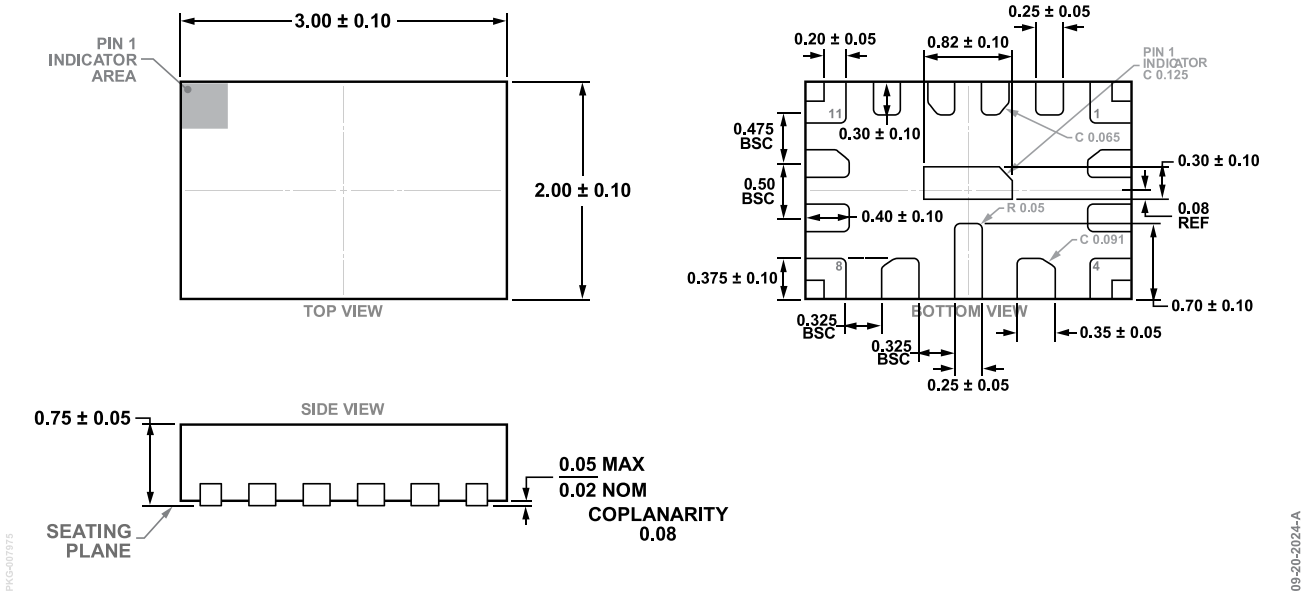

RECOMMENDED SOLDER PAD LAYOUT
(TOP VIEW)

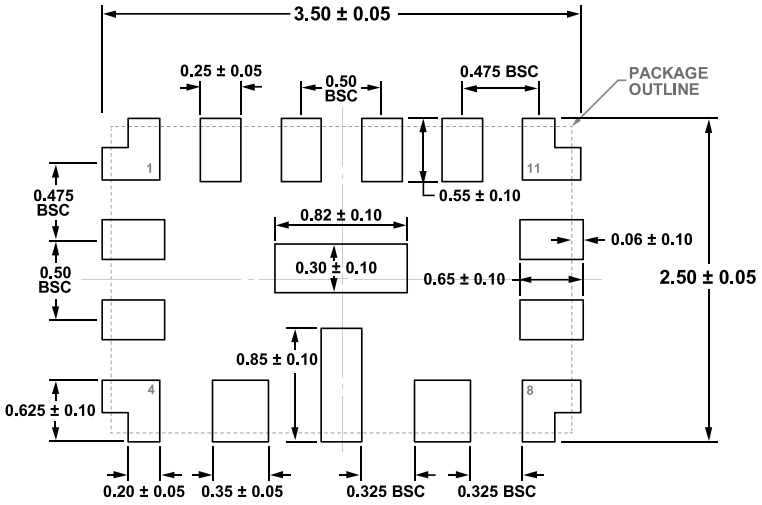

Figure 68. Tiny 15-Lead 3mm x 2mm LFCSP

Downloaded from Arrow.com.

ORDERING GUIDE

Table 9. Ordering Guide

TAPE AND REEL[1]	TAPE AND REEL (MINI)[2]	PAD OR BALL FINISH[3]	PART MARKING[4]		PACKAGE TYPE	MSL RATING	TEMPERATURE RANGE[5]
			DEVICE	FINISH CODE			
LT83401RUDB#TRPBF	LT83401RUDB#TRMPBF	100Sn	LHWS	e3	LFCSP (Lead Frame Chip Scale Package)	1	–40°C to 150°C
LT83402RUDB#TRPBF	LT83402RUDB#TRMPBF		LHWR				
AUTOMOTIVE PRODUCTS[6]							
LT83401RUDB#WTRPBF	LT83401RUDB#WTRMPBF	100Sn	LHWS	e3	LFCSP (Lead Frame Chip Scale Package)	1	–40°C to 150°C
LT83402RUDB#WTRPBF	LT83402RUDB#WTRMPBF		LHWR				

[1] Parts ending with PBF are RoHS and WEEE compliant.

[2] *Tape and reel specifications*. Some packages are available in 500-unit reels through designated sales channels with #TRMPBF suffix.

[3] Pad or ball finish code is per IPC/JEDEC J-STD-609.

[4] The temperature grade is identified by a label on the shipping container.

[5] The LT83401/LT83402 are specified over the -40°C to 150°C operating junction temperature range. High junction temperatures degrade operating lifetimes. The junction temperature (T_J, in °C) is calculated from the ambient temperature (T_A in °C) and power dissipation (P_D, in Watts) according to the formula: $T_J = T_A + (P_D \times \theta_{JA})$, where θ_{JA} (in °C/W) is the package thermal impedance.

[6] Versions of this part are available with controlled manufacturing to support the quality and reliability requirements of automotive applications. These models are designated with a #W suffix. Only the automotive-grade products shown are available for use in automotive applications. Contact your local Analog Devices account representative for specific product ordering information and to obtain the specific Automotive Reliability reports for these models.

[7] For parts specified with wider operating temperature ranges, contact the factory.

Downloaded from Arrow.com.

RELATED PARTS

Table 10. Related Parts

PART	DESCRIPTION	COMMENTS
LT83203/ LT83205	18V, 4A Step-Down Silent Switcher 3 with Ultralow Noise Reference	4μV_{RMS} Noise, V_{IN} = 2.8V to 18V, $V_{OUT(MIN)}$ = 0V, I_Q = 2.7mA, 3mm x 2mm LFCSP-15
LT8622S/ LT8624S	18V, 2A/4A Synchronous Step-Down Silent Switcher 3 with Ultralow Noise Reference	4μV_{RMS} Noise, V_{IN} = 2.7V to 18V, $V_{OUT(MIN)}$ = 0V, I_Q = 2.8mA, 4mm x 3mm LQFN-20
LT8625S	18V/8A Synchronous Step-Down Silent Switcher 3 with Ultralow Noise Reference	4μV_{RMS} Noise, V_{IN} = 2.7V to 18V, $V_{OUT(MIN)}$ = 0V, I_Q = 2.8mA, 4mm x 3mm LQFN-20
LT8625SP/ LT8625SP-1	18V/8A Synchronous Step-Down Silent Switcher 3 with Ultralow Noise Reference	4μV_{RMS} Noise, V_{IN} = 2.7V to 18V, $V_{OUT(MIN)}$ = 0V, I_Q = 2.8mA, 4mm x 3mm LQFN-20 or 4mm x 4mm LQFN-24
LT8627SP	18V/16A Synchronous Step-Down Silent Switcher 3 with Ultralow Noise Reference	4μV_{RMS} Noise, V_{IN} = 2.8V to 18V, $V_{OUT(MIN)}$ = 0V, I_Q = 3.2mA, 4mm × 4mm LQFN-24`
LT8640A	42V, 5A Synchronous Step-Down Silent Switcher	V_{IN}: 3.4V to 42V, $V_{OUT(MIN)}$ = 0.97V, I_Q = 2.5μA, I_{SD} < 1μA, 3mm × 4mm QFN-18
LT3042	20V, 200mA, Ultralow Noise Ultrahigh PSRR Linear Regulator	0.8μV_{RMS} Noise and 79dB PSRR at 1MHz, V_{IN} = 1.8V to 20V, 350mV Dropout Voltage, Programmable Current Limit and PowerGood, 3mm × 3mm DFN and MSOP Packages
LT3045	20V, 500mA, Ultralow Noise Ultrahigh PSRR Linear Regulator	0.8μV_{RMS} Noise and 75dB PSRR at 1MHz, V_{IN} = 1.8V to 20V, 260mV Dropout Voltage, 3mm × 3mm DFN and MSOP Packages
LT8640S/ LT8643S	42V, 6A Synchronous Step-Down Silent Switcher 2 with I_Q = 2.5μA	$V_{IN(MIN)}$ = 3.4V, $V_{IN(MAX)}$ = 42V, $V_{OUT(MIN)}$ = 0.97V, I_Q = 2.5μA, I_{SD} < 1μA, 4mm × 4mm LQFN-24
LT8609/ LT8609A	42V, 2A, 94% Efficiency, 2.2MHz Synchronous MicroPower Step-Down DC/DC Converter with I_Q = 2.5μA	$V_{IN(MIN)}$ = 3V, $V_{IN(MAX)}$ = 42V, $V_{OUT(MIN)}$ = 0.8V, I_Q = 2.5μA, I_{SD} < 1μA, MSOP-10E

Downloaded from Arrow.com.

ALL INFORMATION CONTAINED HEREIN IS PROVIDED “AS IS” WITHOUT REPRESENTATION OR WARRANTY. NO RESPONSIBILITY IS ASSUMED BY ANALOG DEVICES FOR ITS USE, NOR FOR ANY INFRINGEMENTS OF PATENTS OR OTHER RIGHTS OF THIRD PARTIES THAT MAY RESULT FROM ITS USE. SPECIFICATIONS ARE SUBJECT TO CHANGE WITHOUT NOTICE. NO LICENCE, EITHER EXPRESSED OR IMPLIED, IS GRANTED UNDER ANY ADI PATENT RIGHT, COPYRIGHT, MASK WORK RIGHT, OR ANY OTHER ADI INTELLECTUAL PROPERTY RIGHT RELATING TO ANY COMBINATION, MACHINE, OR PROCESS, IN WHICH ADI PRODUCTS OR SERVICES ARE USED. TRADEMARKS AND REGISTERED TRADEMARKS ARE THE PROPERTY OF THEIR RESPECTIVE OWNERS. ALL ANALOG DEVICES PRODUCTS CONTAINED HEREIN ARE SUBJECT TO RELEASE AND AVAILABILITY.

Downloaded from Arrow.com.