ShinDengen

S4VB60

Bridge Diodes
600V, 4A

Feature

- Input/Outout In-line
- Pb free terminal
- RoHS:Yes

OUTLINE

Package (House Name): S4VB



Equivalent circuit

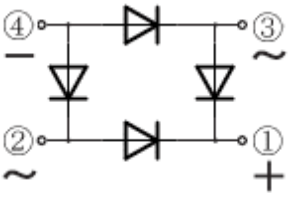

Absolute Maximum Ratings (unless otherwise specified : Tl=25°C)

Item	Symbol	Conditions	Ratings	Unit
Storage temperrature	Tstg		-40 to 150	°C
Junction temperature	Tj		-40 to 150	°C
Repetitive peak reverse voltage	V_{RRM}		600	V
Average forward current	I_F(AV)	50Hz sine wave, Resistance load, With heatsink, Ta=40°C, Rth(f-a)=10°C/W	4	A
Average forward current	I_F(AV)	50Hz sine wave, Resistance load, Without heatsink, Ta=40°C	2.6	A
Surge forward current	I_{FSM}	50Hz sine wave, Non-repetitive 1 cycle peak value, Tj=25°C	80	A
Current squared time	I^2t	1ms≦tp＜10ms, Tj=25°C, per diode	32	A^2s
Mounting torque	TOR	(Recommended torque : 0.5N･m)	0.8	N･m

※ ：See the original Specifications

Downloaded from Arrow.com.

Electrical Characteristics (unless otherwise specified : Tl=25°C)

Item	Symbol	Conditions	Ratings			Unit
			MIN	TYP	MAX	
Forward voltage	V_F	IF=2A, Pulse measurement, per diode			1.05	V
Reverse current	I_R	VR=600V, Pulse measurement, per diode			10	μA
Thermal resistance	Rth(j-l)	Junction to lead			4.5	°C/W

※ :See the original Specifications

Downloaded from Arrow.com.

CHARACTERISTIC DIAGRAMS

Forward Voltage

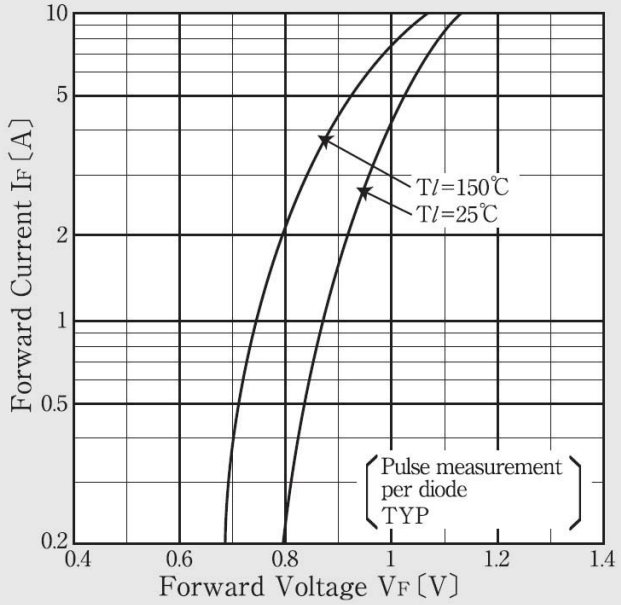

Forward Power Dissipation

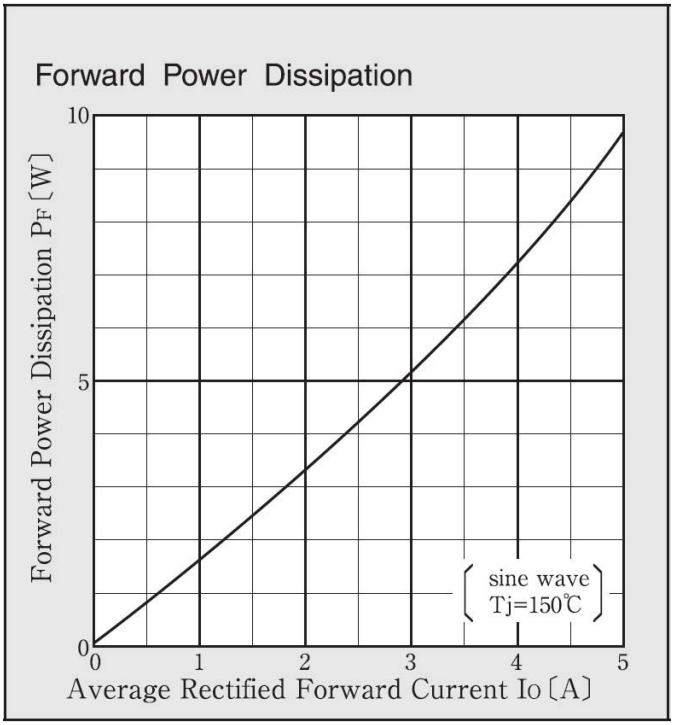

Peak Surge Forward Current Capability

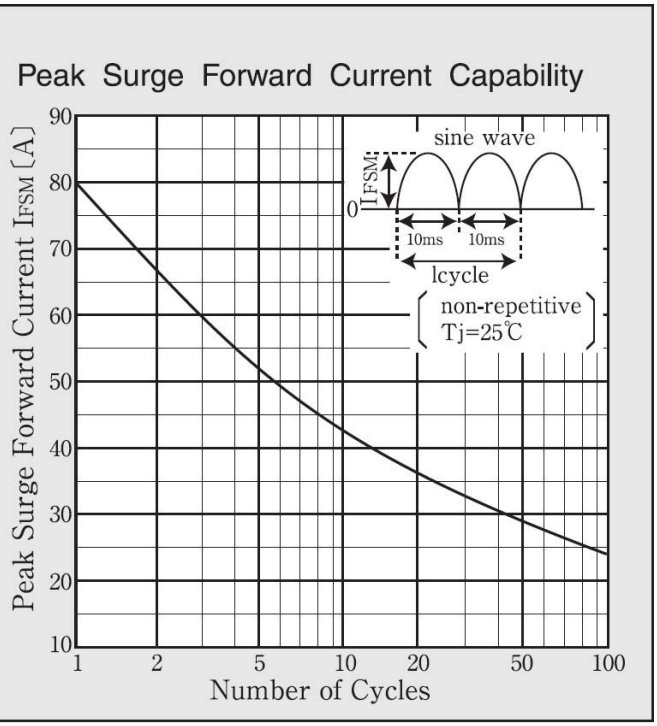

Derating Curve

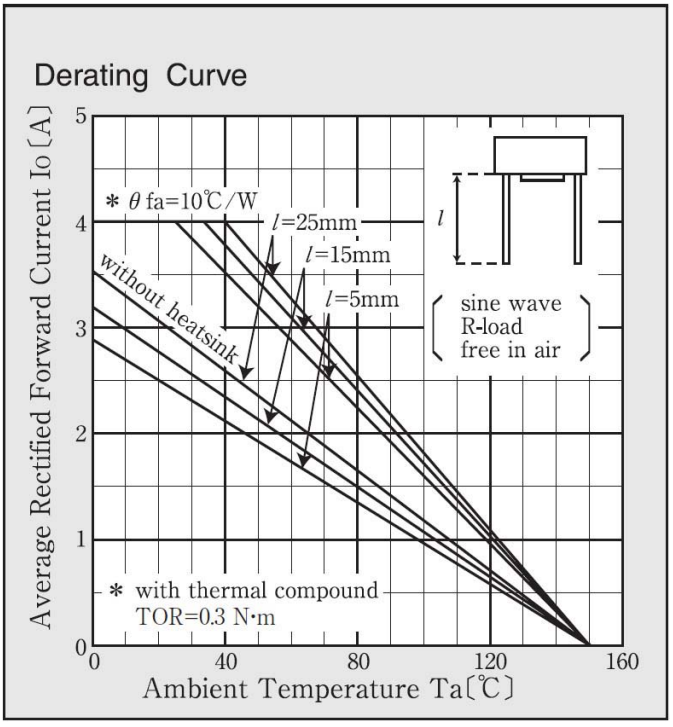

Downloaded from Arrow.com.

Outline Dimensions

unit:mm

E4

JEDEC Code	–
JEITA Code	–
House Name	S4VB

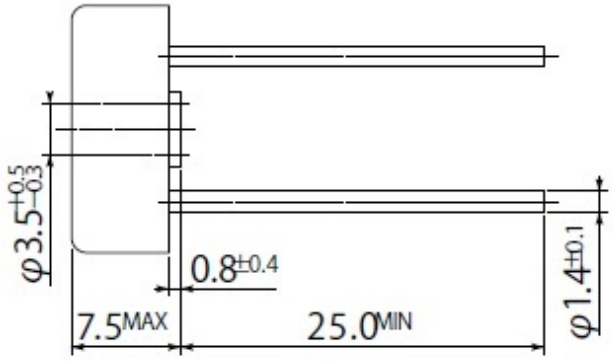

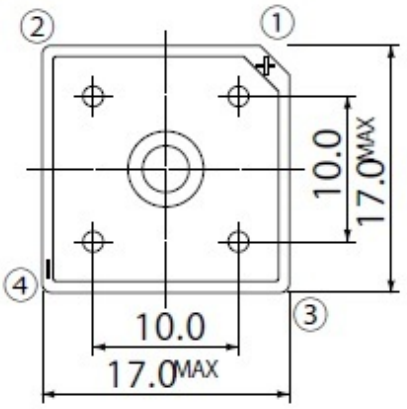

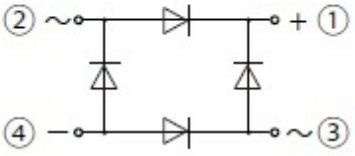

• The content specified herein is subject to change for improvement without notice.
• If you wish to use any such products, please be sure to refer to the specifications.

U182-1(2026.09)

Downloaded from Arrow.com.

Notes

1. If you wish to use any such product, please be sure to refer to the specifications issued by Shindengen.
2. All products described or contained herein are designed with a quality level intended for use in standard applications requiring an ordinary level of reliability. If these products are to be used in equipment or devices for special or specific applications requiring an extremely high grade of quality or reliability in which failures or malfunctions of products may directly affect human life or health, a local Shindengen office must be contacted in advance to confirm that the intended use of the product is appropriate. Shindengen products are grouped into the following three applications according the quality grade.

   【Standard applications】
   Computers, office automation and other office equipment, communication terminals, test and measurement equipment, audio/visual equipment, amusement equipment, consumer electronics, machine tools, personal electronic equipment, industrial equipment, etc.
   【Special applications】
   Transportation equipment (vehicles, ships, etc.), trunk-line communication equipment, traffic signal control systems, anti-disaster/crime systems, safety equipment, medical equipment, etc.
   【Specific applications】
   Nuclear reactor control systems, aircraft, aerospace equipment, submarine repeaters, life support equipment and systems, etc.
3. Although Shindengen continuously endeavors to enhance the quality and reliability of its products, customers are advised to consider and take safety measures in their design, such as redundancy, fire containment and anti-failure, so that personal injury, fires, or societal damages can be prevented.
4. Please note that all information described or contained herein is subject to change without notice due to product upgrades and other reasons. When buying Shindengen products, please contact the Company’s offices or distributors to obtain the latest information.
5. Shindengen shall not bear any responsibility with regards to damages or infringement of any third-party patent rights and other intellectual property rights incurred due to the use of information on this website.
6. The information and materials on this website neither warrant the use of Shindengen's or any third party’s patent rights and other intellectual property rights, nor grant license to such rights.
7. In the event that any product described or contained herein falls under the category of strategic products controlled under the Foreign Exchange and Foreign Trade Control Law of Japan, exporting of such products shall require an export license from the Japanese government in accordance with the above law.
8. No reprinting or reproduction of the materials on this website, either in whole or in part, is permitted without proper authorization from Shindengen.

Downloaded from Arrow.com.